Providing engineered solutions for all
your manufacturing process needs

subec

Your Source of Inspiration

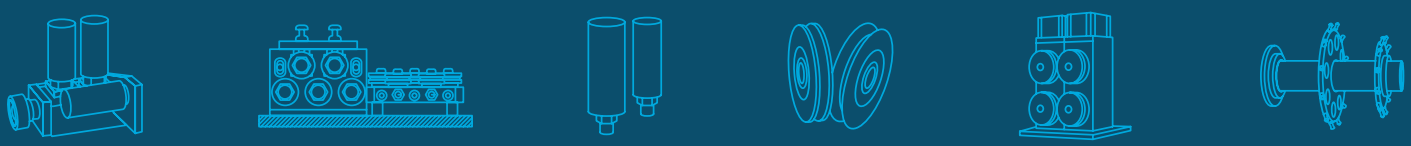

subec

Rollers  1

Guide Rollers  2

Roller Crosses  3

Stands and Tables  4

Pulleys, Sheaves, Roller Arc  5

Straighteners, Straightening Rollers  6

Straighteners & Guides, Flat Products  7

Pre- & Postformers 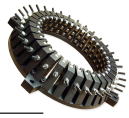 8

Drive Units and Caterpillars  9

Brakes  10

Pay Offs, Linear Bi-dir. Gear Box, Dancer  11

Ceramic Guides and Rollers 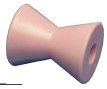 12

Tungsten Carbide  13

Machines, Length Counters, Buncher Bows  14

Cutting Tools, Print Guides and other Assemblies  15

INTRODUCTION TO SUBEC

Mission and goal

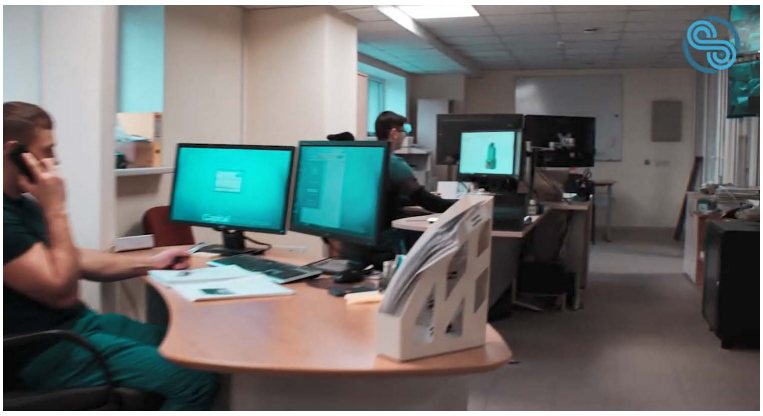

Subec's main focus is to serve a world-wide wire, cable and plastic industry with quality equipment and has been doing so since 1986.

With close cooperation with the customers and through deep technical knowledge Subec provides solutions to the customers' specific requirements. By carefully monitoring the function and the advantages of the products, a strong customer relation is built.This focus allows added value to be created for the customer, our company and employees.

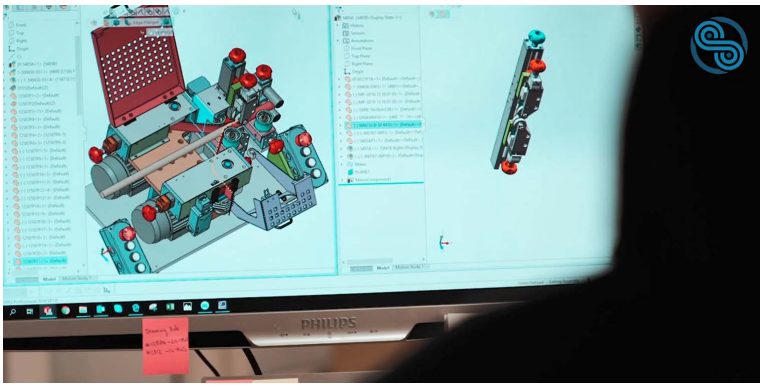

Design and development

Subec has with it's own designers and manufacturing a wide range of capabilities. Don't worry if your ideas are not fully drawn up and designed yet. Our experienced team of designers will assist, complete or fully design your products according to your specifications.

The combination of our design office and our modern work shop gives you a strong, reliable and flexible partner. We manufacture quality in every step of the process.



INTRODUCTION TO SUBEC

Manufacturing

Over half of our production each year is “custom”. Not that we reinvent the wheel, but we incorporate proven components together with designed components to meet our customers unique requirements.



Our skilled team of CNC operators are educated and have many years experience in metal machining. Years of practising has made us experts in this area.



Assembly

It is a joy for our assembly team to be a part of the magic, when all parts from the manufacturing, together becomes a new functional creation.

“Quality products can only be manufactured in a tidy, clean and organized enviornment”

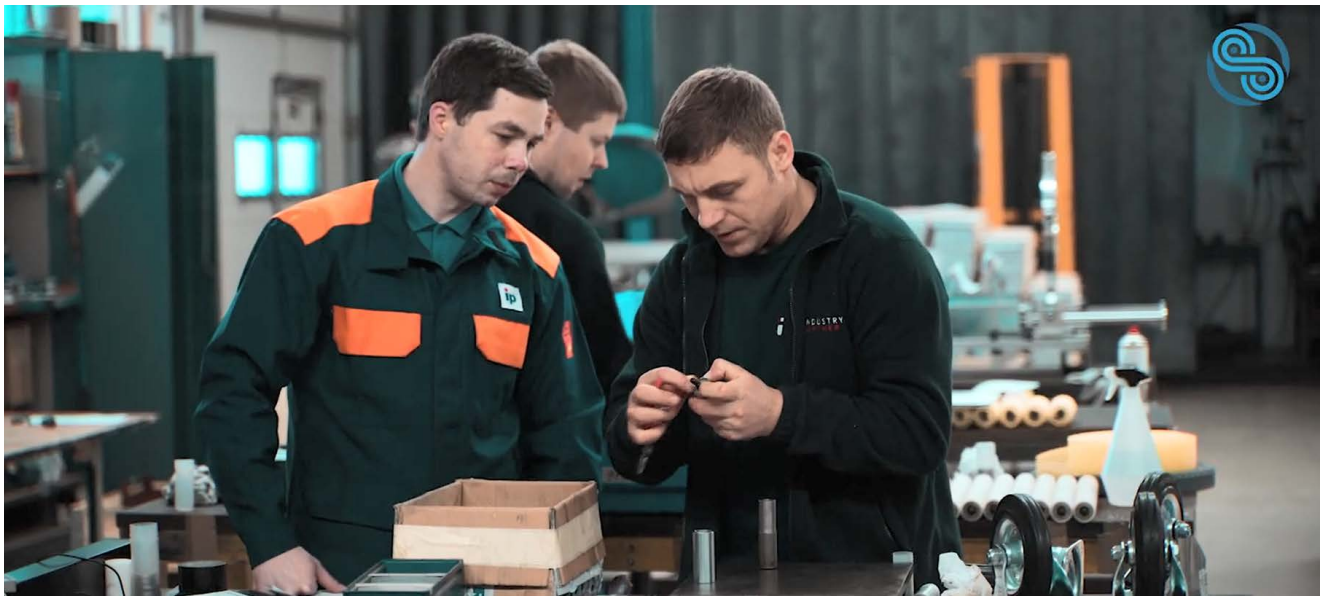

subec



Our continuing program of product and process improvement may make changes necessary in specifications and data contained herein without notice. Common inventory items are labeled with a *.



Unser fortlaufendes Programm von Produkt - und Prozessverbesserungen kann Änderungen in der Spezifikation und den Daten mit sich führen, ohne dass wir darüber informieren. Übliche Lagerware sind mit einem * gekennzeichnet.

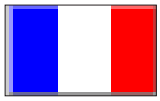

En raison de la constante évolution de nos produits, leurs caractéristiques peuvent différer quelque peu des indications contenues dans ce catalogue. Les articles en stock commun sont marqués d'un *.



Debido al desarrollo y a las modificaciones constantes de nuestros productos las características de éstos pueden diferenciarse algo de las indicaciones contenidas en este catálogo. Los artículos de acciones comunes están marcados con un *.



В связи с постоянным развитием и эволюцией нашей продукции, ее характеристики могут отличаться от информации, содержащейся в данном каталоге. Обычные товары отмечены *.



Vår kontinuerliga utveckling av produkter och processer kan kräva nödvändiga ändringar i specifikationer och data som finns här utan förvarning. Vanliga lagervaror är märkta med en *.

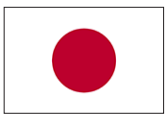

私たちの製品およびプロセス改善の継続的なプログラムにより、仕様やデータに必要な変更が生じる場合がありますが、その際は予告なく実施されることがあります。一般的な在庫アイテムには「*」が付けられています。

ROLLERS

Rollers:

Standard: HRX (Surface hardened + chromium coated)

Option: Various plastics, coatings, stainless steel, ceramics, and tungsten carbide.

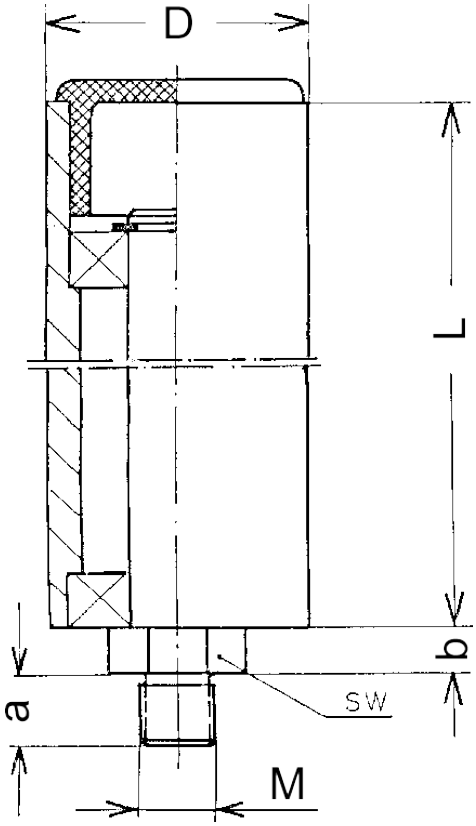



Article	ØD	L	SW	M	a	b	Weight
05680*	16	30	10	6	12	7	0,04
06814*	16	80	10	6	12	7	0,108
00104*	20	40	14	8	10	7	0,069
08981*	20	50	13	6	12	6	0,100
00631*	20	60	14	8	10	7	0,102
03555*	20	60	14	8	20	7	0,105
02383*	20	60	14	12	10	7	0,107
00791*	20	80	14	8	10	7	0,136
03868*	20	100	14	8	10	7	0,17
00607*	20	100	14	10	10	7	0,172
10188*	20	120	14	8	10	7	0,200
01177*	20	180	14	8	20	7	0,308
07093*	25	100	17	10	20	10	0,3
01872*	30	40	17	12	12	7	0,144
00555*	30	60	17	12	12	7	0,225
12986*	30	65	17	8	35	7	0,2
00018*	30	90	17	12	12	7	0,350
03893A	30	90	17	12	25	7	0,332
07417*	30	90	17	10	30	7	0,3
00019*	30	110	17	12	12	7	0,413
01256*	30	130	17	12	12	7	0,500
01259*	30	150	17	12	12	7	0,565
03556*	30	200	14	12	12	7	0,761
01493*	40	60	17	12	12	7	0,391
08024*	40	80	19	12	24	10	0,5
00021*	40	90	17	12	12	7	0,601
00022*	40	110	17	12	12	7	0,728
03121*	40	150	17	12	12	7	0,995
00024*	40	200	17	12	12	7	1,241

Other dimensions on request

Drawing No. 3-400070-00

* Stock item

Subec AB **Hesselmans Torg 5** **SE- 131 54 Nacka** **Sweden** **Phone: +46-8-88 46 33** **Email: info@subec.se** **Web: www.subec.se**

Copyright © 2026 Subec

ROLLERS

Rollers:

Standard: HRX (Surface hardened + chromium coated)

Option: Various Plastics

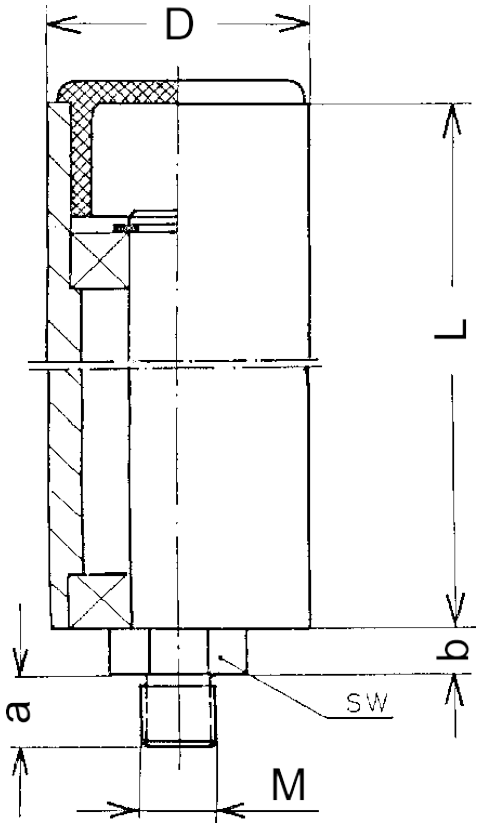

Article	ØD	L	SW	M	a	b	Weight
00025*	40	250	17	12	12	7	1,685
02708*	50	50	19	12	24	10	0,51
01363*	50	80	19	12	24	10	0,848
07098*	50	100	24	12	25,5	10	0,95
03407*	50	200	19	12	24	10	1,93
00026*	60	110	22	12	12	9	1,649
00027*	60	130	22	12	12	9	1,976
00028*	60	150	22	12	12	9	2,328
05272*	60	160	22	12	12	9	2,487
04685*	60	200	22	12	12	9	3,129
00656*	60	220	22	12	30	9	3,169
00657*	60	300	19	12	30	7	4,331



Other dimensions on request

Drawing No. 3-400070-00

* Stock item

Subec AB **Hesselmans Torg 5** **SE- 131 54 Nacka** **Sweden** **Phone: +46-8-88 46 33** **Email: info@subec.se** **Web: www.subec.se**

Copyright © 2026 Subec

ROLLERS

Rollers:

Steel with ceramic coating

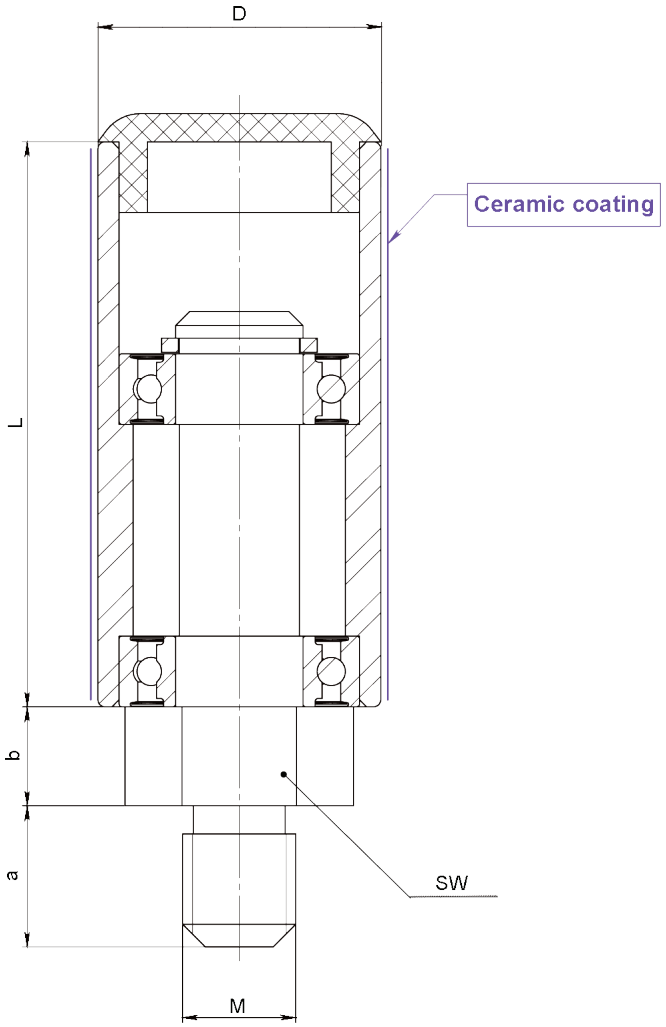

Article	ØD	L	SW	M	a	b	Weight
12730	10	30	14	8	10	7	
12731	16	30	10	6	12	7	
08976*	20	40	14	8	10	7	0,07kg
08927*	20	80	14	8	10	7	0,1kg
07681	30	40	17	12	12	7	
08773	40	60	17	12	12	7	
10938	40	76	17	12	12	7	
09527	40	110	17	12	25	7	0,76kg

Other dimensions on request

Drawing No. 3-400070-00

* Stock item

Subec AB **Hesselmans Torg 5** **SE- 131 54 Nacka** **Sweden** **Phone: +46-8-88 46 33** **Email: info@subec.se** **Web: www.subec.se**

Copyright © 2026 Subec

ROLLERS

Rollers:

Standard: HRX (Surface hardened + chromium coated)
Option: Various Plastics

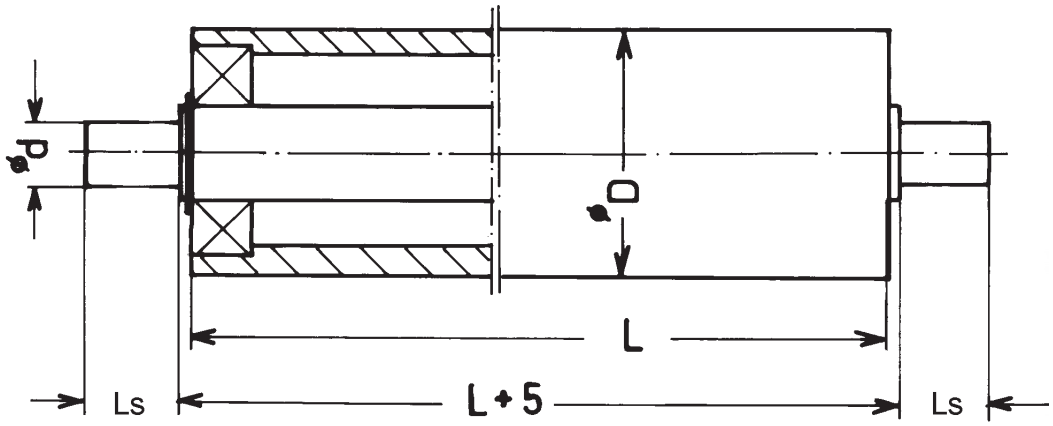

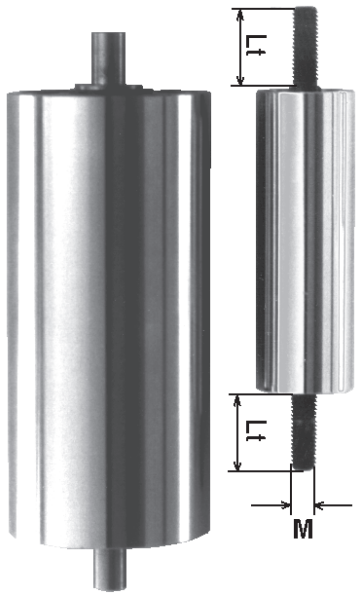

Alternative: Threaded end

Article		ØD	L	Ls	Lt	Ød	M	Sym	Weight
Smooth	Threaded								
05273*	06945A*	20	40	15	11	8	8		0,08
05274*	03201	20	60	15	20	8	8		0,12
08087	01483	20	80	15	20	8	6		-
05261*	05993	20	100	15	20	8	8		0,19
05390*	11997	30	40	15	20	10	8		0,15
00111	02473A*	30	60	15	20	10	8		0,26
01539*	-	30	60	17,5	-	10	-	X	0,26
06375	05624*	30	90	12,5	20	10	8		-
04618*	03219*	30	110	18	20	10	8		0,47
-	08950*	30	150	-	20	-	10	X	-
00134*	01703	40	60	15	30	10	12		-
01036*	05806	40	90	15	20	10	12		-
00136*	04370*	40	110	15	20	10	12		0,79
00561	06283*	40	150	15	30	10	12		1,08
-	08918*	40	200	-	20	-	10		-
-	07938*	40	250	-	20	-	12		1,79
01157	-	60	110	15	-	10	15		-
00781*	09018	60	130	15	30	10	-		2,10
00770*	02255*	60	150	15	20	10	12		2,40
-	02404*	60	160	-	40	-	12		2,758

Other dimensions on request

Drawing No. 3-400169-00

* Stock item

Subec AB **Hesselmans Torg 5** **SE- 131 54 Nacka** **Sweden** **Phone: +46-8-88 46 33** **Email: info@subec.se** **Web: www.subec.se**

Copyright © 2026 Subec

ROLLERS

Rollers:

Standard: HRX (Surface hardened + chromium coated)

Option: Various Plastics

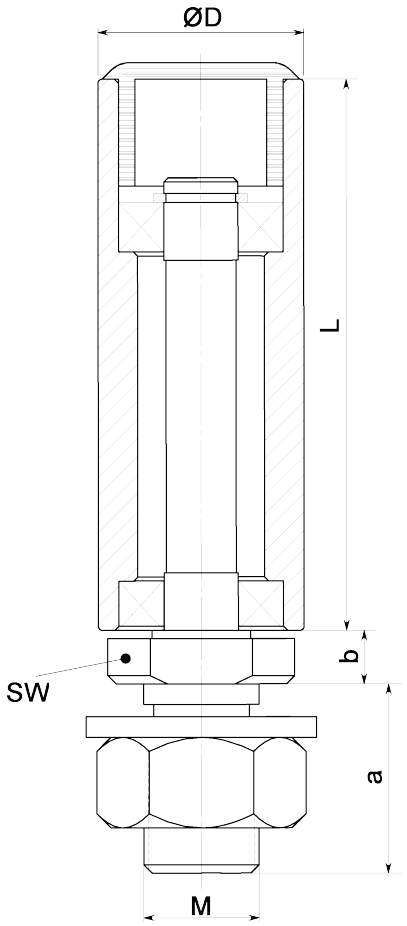

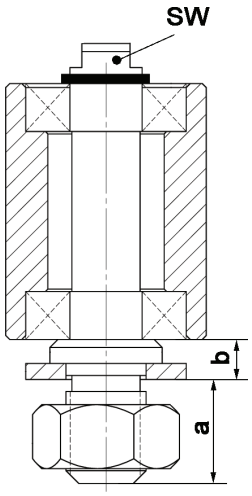

Execution with top key grip



Article: 05557*

Weight: 0,24 kg

Article	ØD	L	SW	M	a	b	Pitch	Weight	Note
07446*	20	27	14	10	30	7	1,25	0,09kg	Without plastic cap
05966	20	60	19	14	23	6,5	2,0	0,16kg	
01005*	24	54	19	14			1,0	0,17kg	
07456*	25	32	6	10	13	5	1,5	0,11kg	Top key grip
05127*	25	67	19	14	23	6,5	1,0	0,21kg	
05557*	25	67	19	14	27	6,5	1,5	0,24kg	
10756*	25	67	19	14	27	6,5	1,5		With PA6 Rollers with stainless bearings

Other dimensions on request

Drawing No. 3-400231-05

* Stock item

Subec AB **Hesselmans Torg 5** **SE- 131 54 Nacka** **Sweden** **Phone: +46-8-88 46 33** **Email: info@subec.se** **Web: www.subec.se**

Copyright © 2026 Subec

ROLLERS

Rollers:

Polyurethane Coating: 90 Shore A

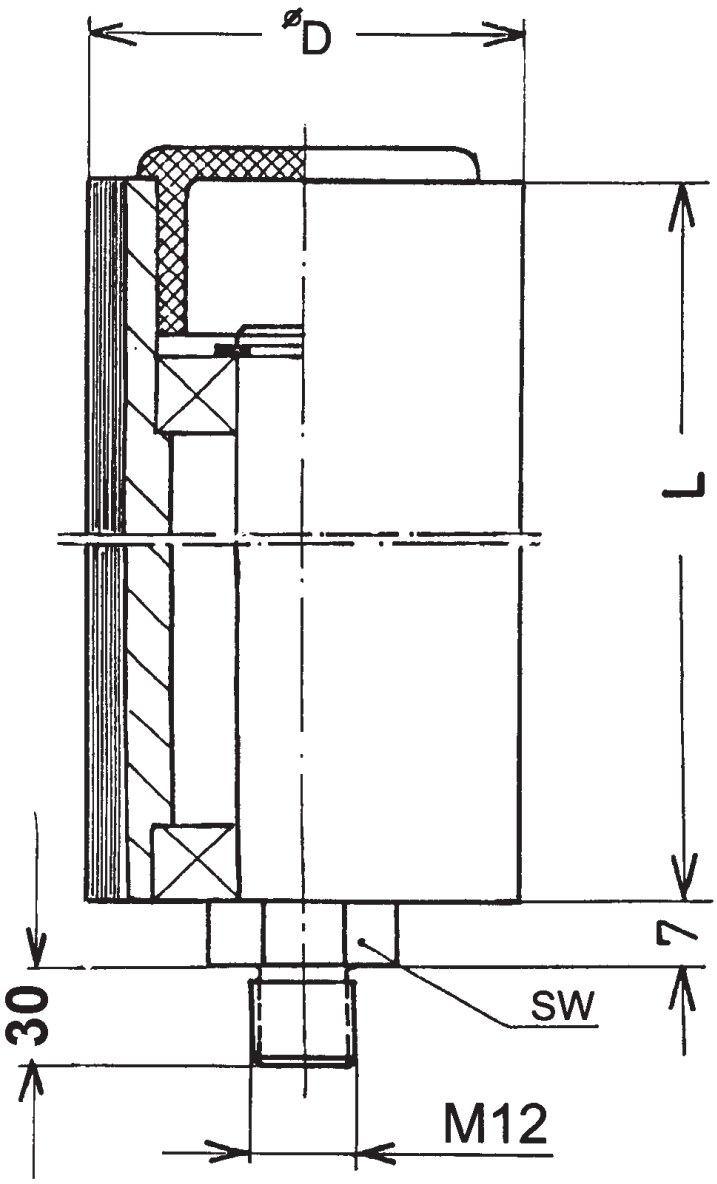



Option: Various hardness (Shore A) and colors

Article	ØD	L	SW
00032*	55	150	17



Other dimensions on request

Drawing No. 3-400235-00

* Stock item

Subec AB **Hesselmans Torg 5** **SE- 131 54 Nacka** **Sweden** **Phone: +46-8-88 46 33** **Email: info@subec.se** **Web: www.subec.se**

Copyright © 2026 Subec

ROLLERS

Rollers:

Standard: HRX (Surface hardened + chromium coated)
Option: Various Plastics

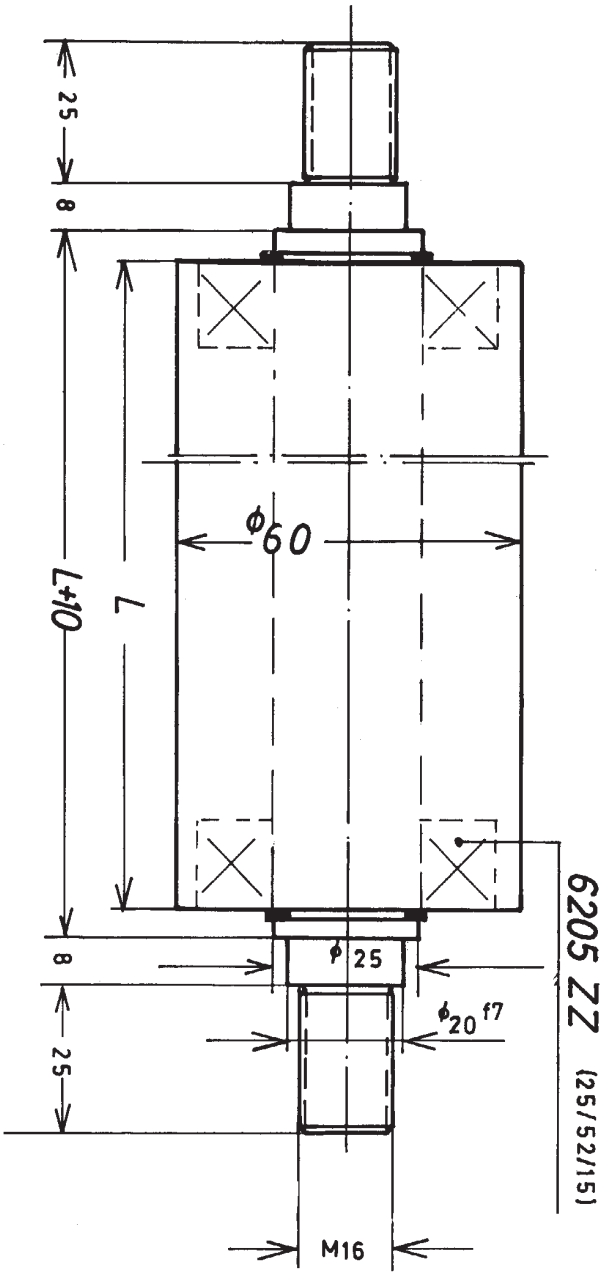

Article	ØD	L
02252	60	120
02254	60	140
00658*	60	170
03377	60	485

Other dimensions on request

Drawing No. 3-400288-00

* Stock item

Subec AB **Hesselmans Torg 5** **SE- 131 54 Nacka** **Sweden** **Phone: +46-8-88 46 33** **Email: info@subec.se** **Web: www.subec.se**

Copyright © 2026 Subec

ROLLERS

Rollers:

Standard: HRX (Surface hardened + chromium coated)
Option: Various Plastics

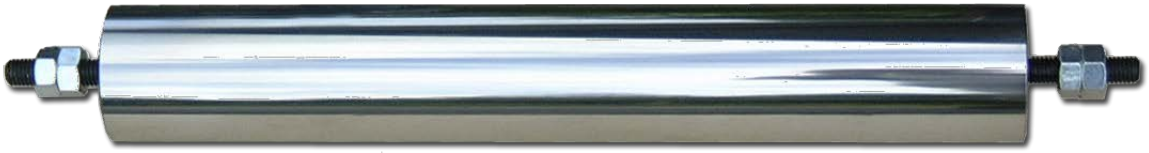

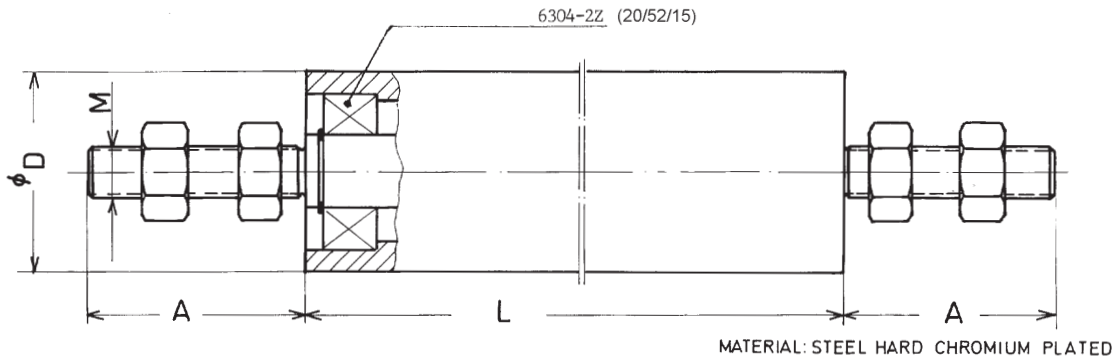

Article	ØD	L	A	M
04525*	50	250	47,5	12
10364*	50	280	47,5	12
02845*	50	520	34	12
02404*	60	160	40	12
00034	60	180	47,5	12
04898*	60	195	47,5	12
00036*	60	220	47,5	12
00037	60	250	47,5	12
03142*	60	320	47,5	12
01166*	60	380	47,5	12
01154	60	400	30	12
02035*	60	450	55	12
02061	60	540	55	12
02036	60	660	55	12
01905	60	680	47,5	12
06511	60	780	47,5	12
00038	60	900	47,5	12
01762	60	1000	47,5	12
00039	60	1100	47,5	12
01898*	80	250	56	20
00041	80	1000	47,5	20

Other dimensions on request

Drawing No. 3-400233-03

* Stock item

Subec AB **Hesselmans Torg 5** **SE- 131 54 Nacka** **Sweden** **Phone: +46-8-88 46 33** **Email: info@subec.se** **Web: www.subec.se**

Copyright © 2026 Subec

ROLLERS

Rollers:

Standard: HRX (Surface hardened + chromium coated)

Option: Various Plastics

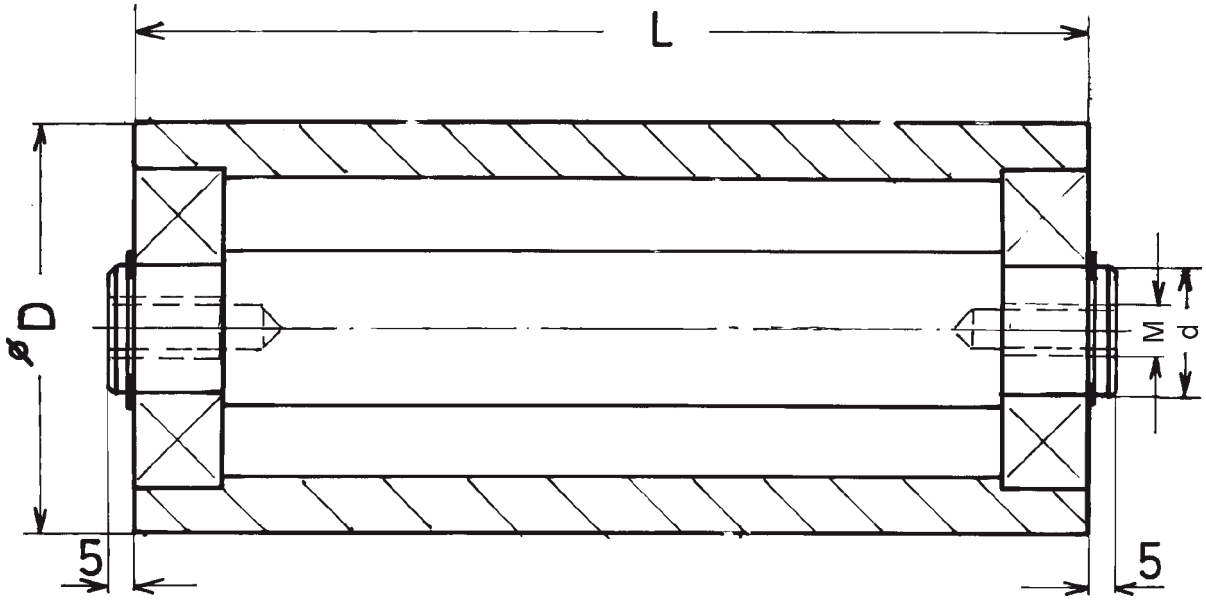

Article	ØD	d	L	M	Weight
11251	30		130	M6	
01553*	80	25	300	M14	7,4
02532*	80	25	385	M12	9
02321*	80	25	469	M12	11,4
03972	40	15	900	M10	
01555	160		340	M18	



Other dimensions on request

Drawing No. 3-400289-01

* Stock item

Subec AB **Hesselmans Torg 5** **SE- 131 54 Nacka** **Sweden** **Phone: +46-8-88 46 33** **Email: info@subec.se** **Web: www.subec.se**

Copyright © 2026 Subec

ROLLERS

Rollers:

Standard: HRX (Surface hardened + chromium coated)

Option: Various Plastics

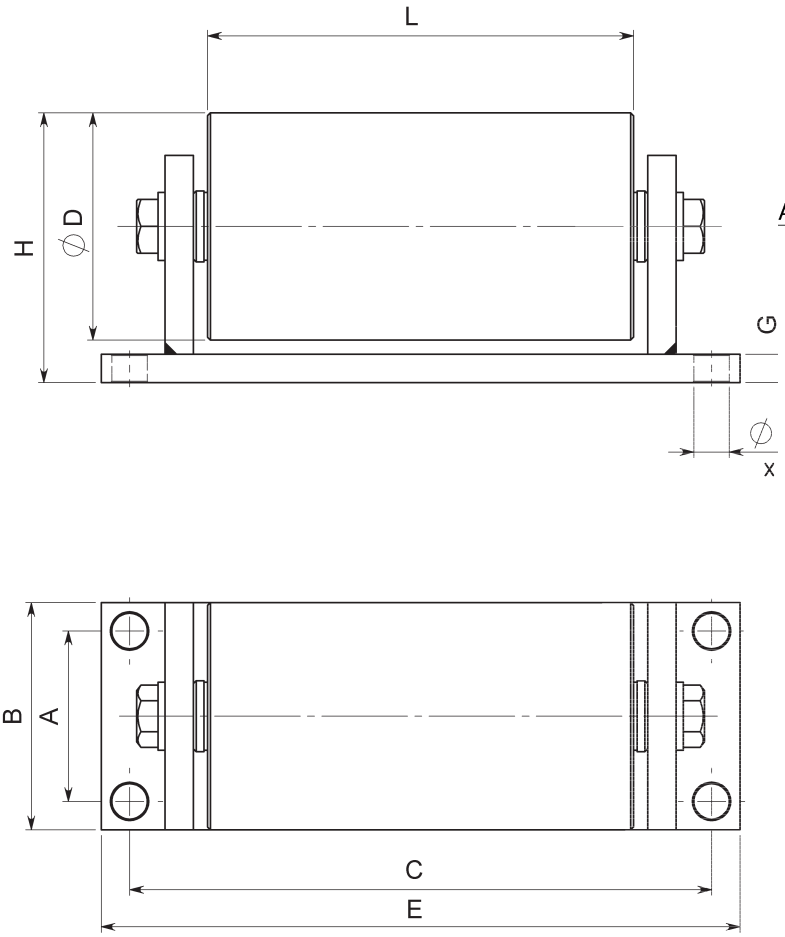

Option: With Stand

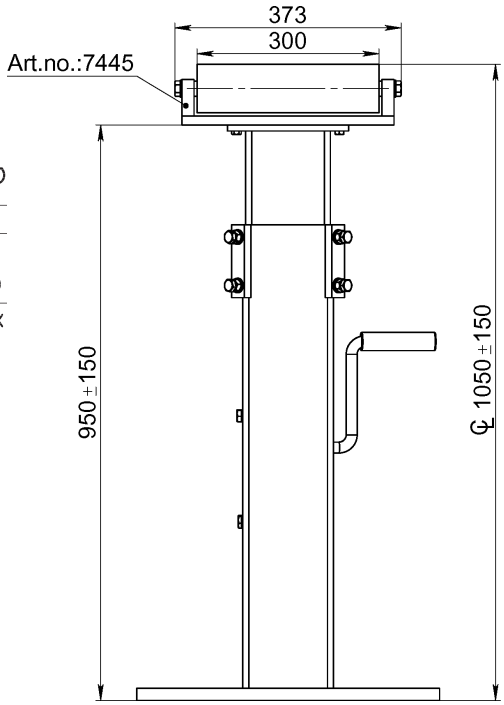

Article	ØD	A	B	C	E	F	G	H	L
02131	80	60	80	205	225	4xØ12,5	10	95	150
07445	80	36	60	330	350	6xM8		100	300
08029	80	40	70	205	225	4xØ11	10	95	150
07444*	70	36	60	246	266	6xM8		90	200
11714	80	160	200	160	200	4xØ12,5	10	95	150

Other dimensions on request

Drawing No. 3-400529-00

* Stock item

Subec AB **Hesselmans Torg 5** **SE- 131 54 Nacka** **Sweden** **Phone: +46-8-88 46 33** **Email: info@subec.se** **Web: www.subec.se**

Copyright © 2026 Subec

ROLLERS

Rollers:

Standard: HRX (Hardened steel)

Option: Various Plastics

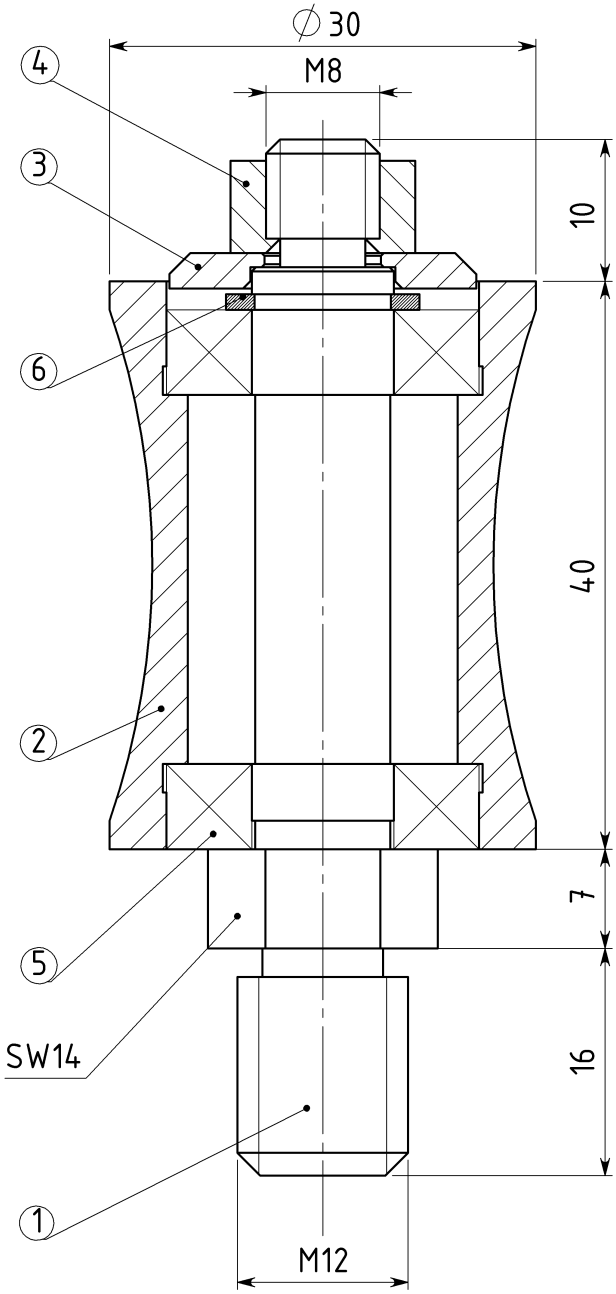

Concave:



Article: 05787*

Crowned:



Article: 02147*

Other dimensions on request

Drawing No. 3-400572-24R

* Stock item

Subec AB **Hesselmans Torg 5** **SE- 131 54 Nacka** **Sweden** **Phone: +46-8-88 46 33** **Email: info@subec.se** **Web: www.subec.se**

Copyright © 2026 Subec

CUSTOMIZED ROLLERS



Article: 11309
With screwdriver slot on shaft end

More information on request

Subec AB **Hesselmans Torg 5** **SE- 131 54 Nacka** **Sweden** **Phone: +46-8-88 46 33** **Email: info@subec.se** **Web: www.subec.se**

Copyright © 2026 Subec

ROLLER GUIDE SYSTEM

50x45

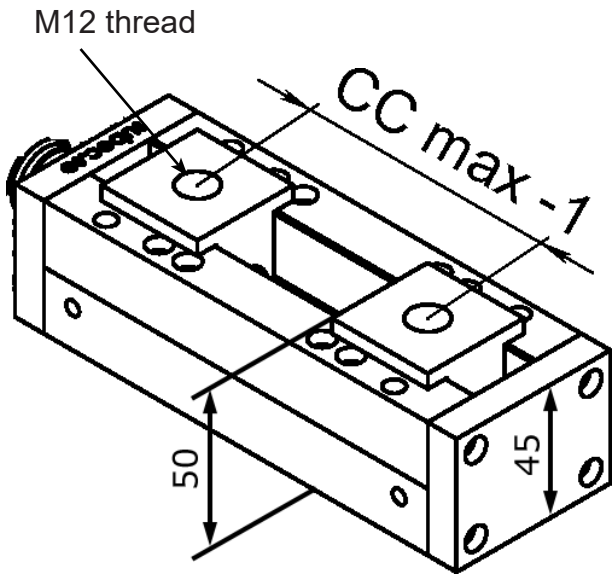

Article	L	A	C	E	CCmax
01597*	115	95	35	75	65
00698*	150	130	95	110	100
06158*	165	145		110	115
00651*	220	200	160	110	170
06159	260	240		110	210
06160	275	255		110	225
00919*	280	260	220	110	230
05404	300	280	240	130	250
06162	310	290		130	260
05145*	350	330	250	130	300
06163	380	360		130	330
06164	400	380		130	350
06165*	430	410		130	380
06161	620	600		130	570

To complete system choose rollers, max Ø60mm.
Product diameter = CCmax - Roller diameter.

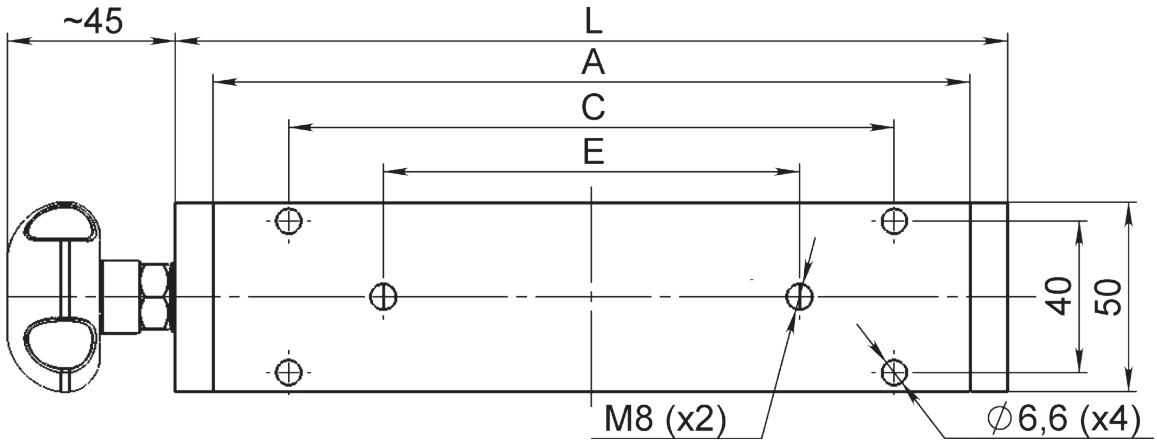

Drawing No. 1-300430-00

* Stock item

Subec AB **Hesselmans Torg 5** **SE- 131 54 Nacka** **Sweden** **Phone: +46-8-88 46 33** **Email: info@subec.se** **Web: www.subec.se**

Copyright © 2026 Subec

ROLLER GUIDE SYSTEM

80x60

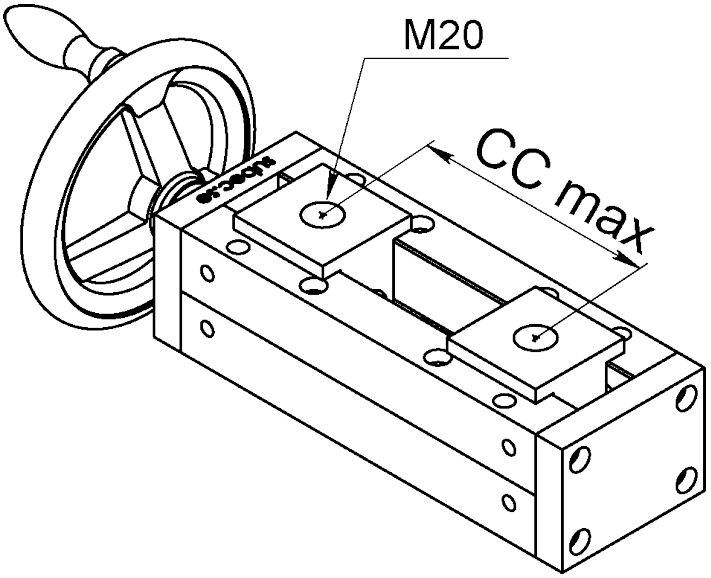

Article	L	A	CCmax
05620*	230	200	150
06187	250	220	170
02450*	300	270	220
06186	320	290	240
04372*	360	330	280
01144	370	340	290
02423	400	370	320
06185	450	420	370
02453	470	440	390
06184	490	460	410
02454	540	510	460
06183	590	560	510
06182	605	575	525
06181	675	645	595
05268	695	665	615
02456	770	740	690
06180	840	810	760

To complete system choose rollers, max Ø60mm.
Product diameter = CCmax - Roller diameter.

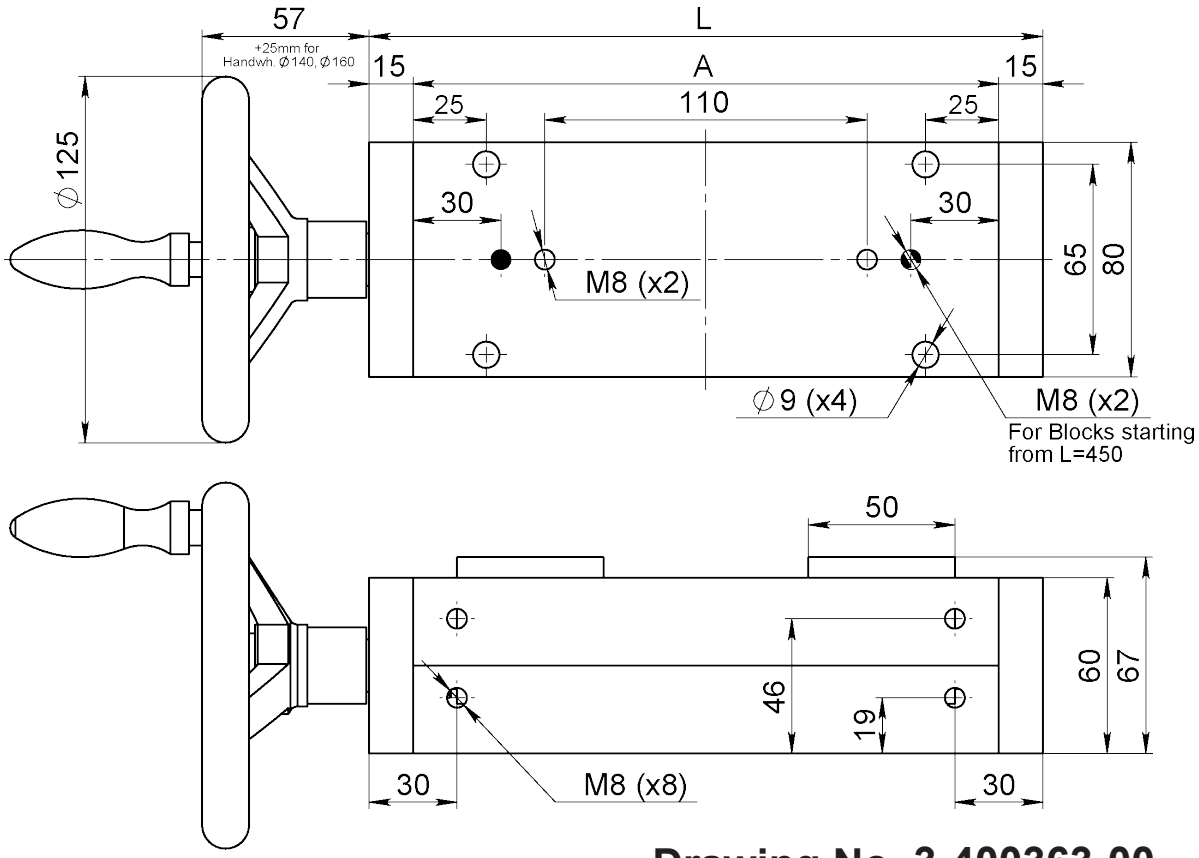

Drawing No. 3-400363-00

* Stock item

Subec AB **Hesselmans Torg 5** **SE- 131 54 Nacka** **Sweden** **Phone: +46-8-88 46 33** **Email: info@subec.se** **Web: www.subec.se**

Copyright © 2026 Subec

TRAVERSE UNIT YZ ±30

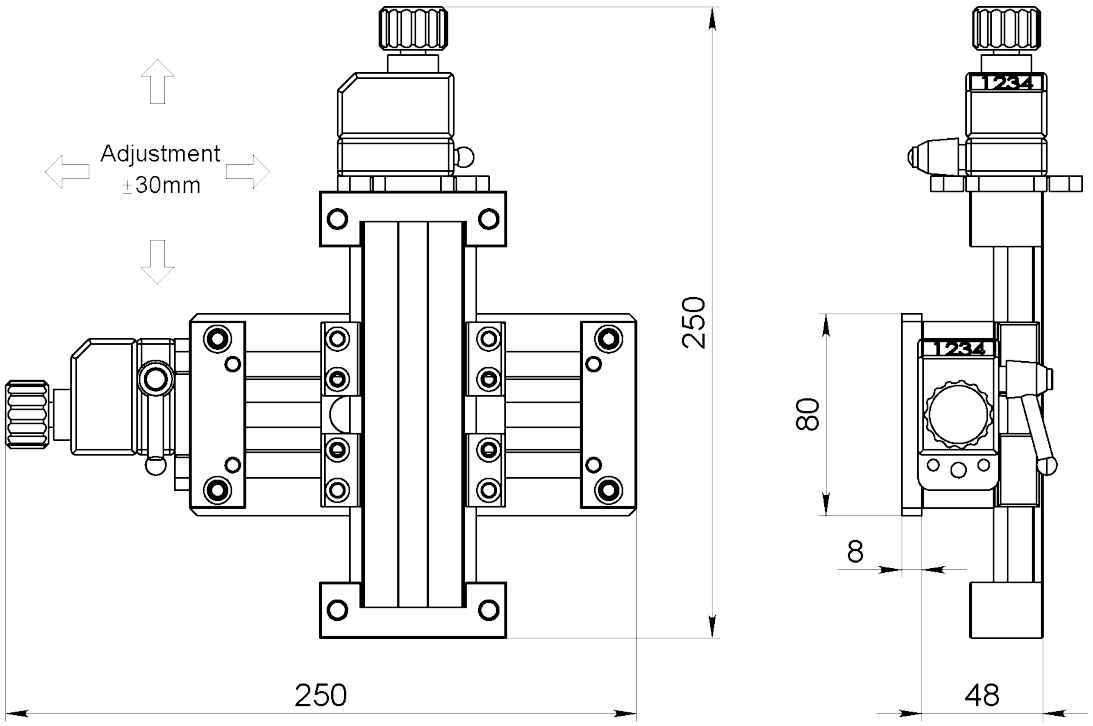

Article: 12110

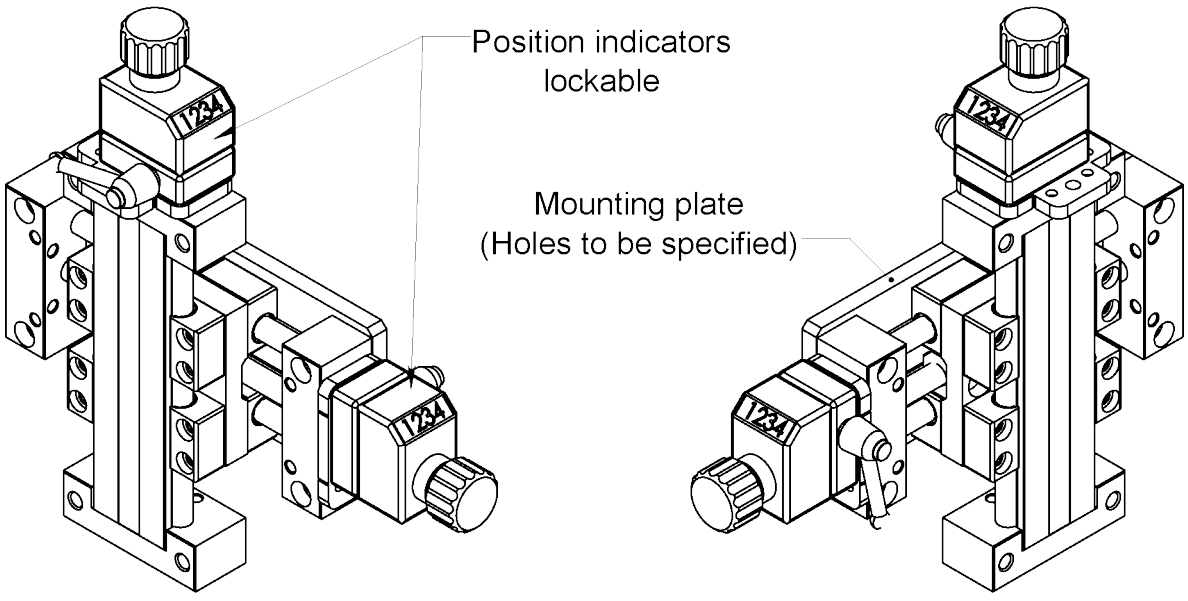

Any direction possible, must be specified upon order

Drawing No. 3-401289-00

Subec AB **Hesselmans Torg 5** **SE- 131 54 Nacka** **Sweden** **Phone: +46-8-88 46 33** **Email: info@subec.se** **Web: www.subec.se**

Copyright © 2026 Subec

CUSTOMIZED ROLLER GUIDE SYSTEMS

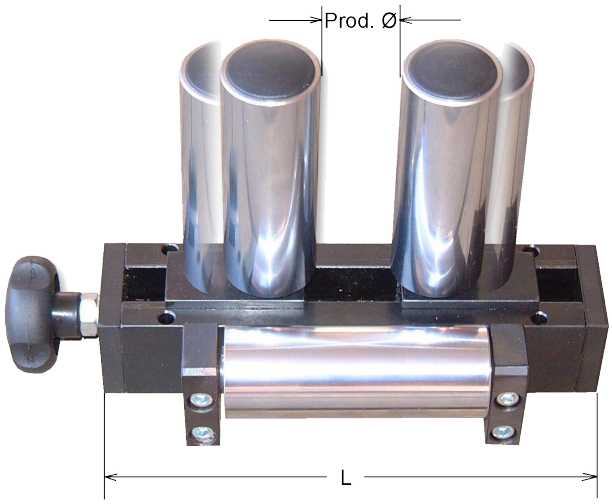

Article: 01079
Weight: 4,2kg
Spring loaded rollers,
for lumps and splices

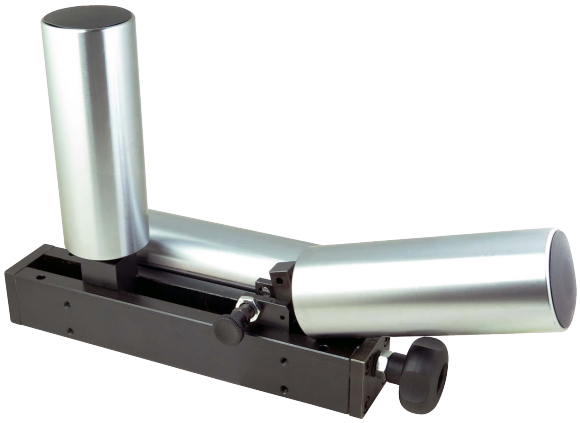

Article: 06008
Weight: 12kg
With one pivot roller. Good solution for inlet and outlet guiding in Caterpillar.



Article: 05807
Individually adjustable rollers



Article: 11337
Individually adjustable rollers, With one pivot roller.Good solution for inlet and outlet guiding in Caterpillar.

More information on request

Subec AB **Hesselmans Torg 5** **SE- 131 54 Nacka** **Sweden** **Phone: +46-8-88 46 33** **Email: info@subec.se** **Web: www.subec.se**

Copyright © 2026 Subec

CUSTOMIZED ROLLER GUIDE SYSTEMS

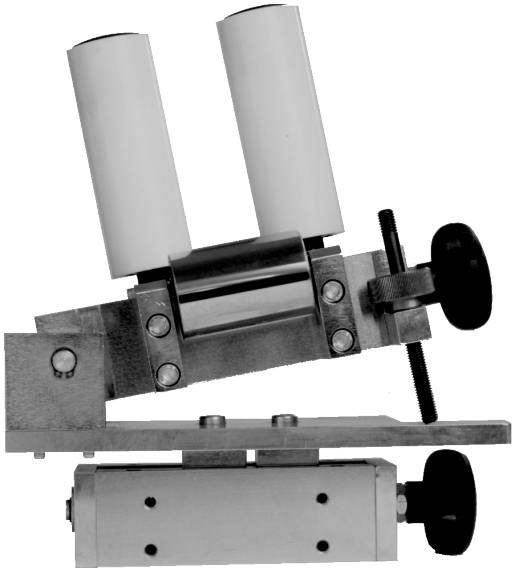

Article: 00054
Tiltable system & traversing
For asymmetrical flat cables



Article: 07008
Centerline adjustment, traversing

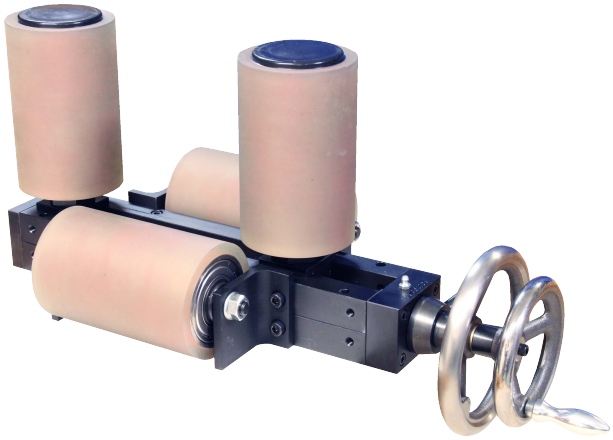

Article: 07841
Centerline adjustment, traversing
for larger product

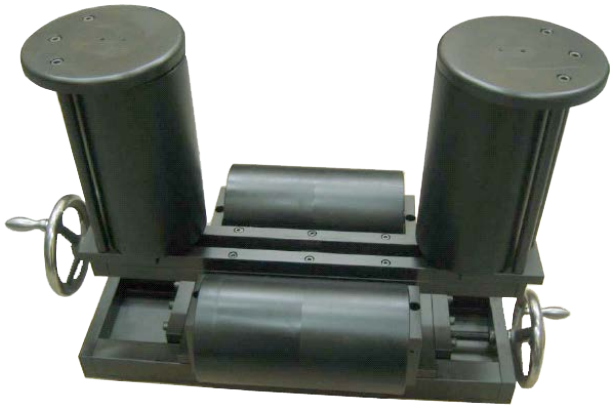

Article: 04638 + 4985
Roller System on Traverse unit

More information on request

Subec AB **Hesselmans Torg 5** **SE- 131 54 Nacka** **Sweden** **Phone: +46-8-88 46 33** **Email: info@subec.se** **Web: www.subec.se**

Copyright © 2026 Subec

CUSTOMIZED ROLLER GUIDE SYSTEMS



Article: 11180
Individually adjustable V-Rollers

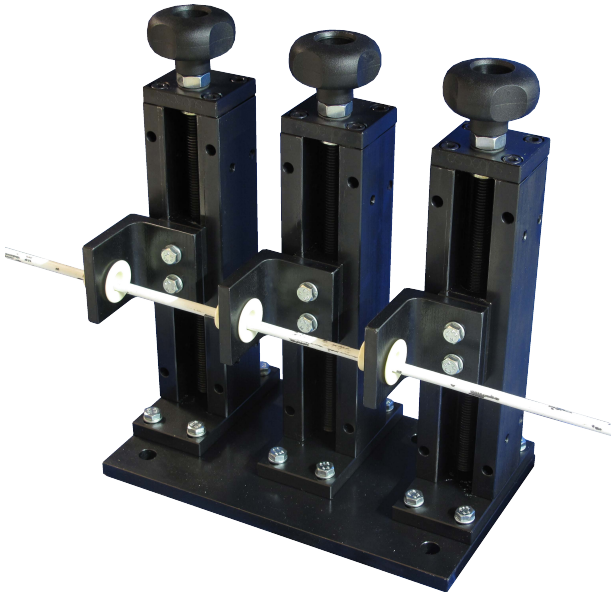

Article: 07963
Guide System for foil application



Article: 08061*
Tiltable roller guide



Article: 10203A
Tiltable adjustable roller guide

More information on request

* Stock item

Subec AB **Hesselmans Torg 5** **SE- 131 54 Nacka** **Sweden** **Phone: +46-8-88 46 33** **Email: info@subec.se** **Web: www.subec.se**

Copyright © 2026 Subec

CUSTOMIZED ROLLER GUIDE SYSTEMS



Article: 11985



Article: 07720
Heavy duty with
reinforced locking



Article: 13128 (Steel Rollers)
Article: 15443 (PA6 Rollers)
Roller guide with quick adjustment. Easily fitted on regular stands.

More information on request

Subec AB **Hesselmans Torg 5** **SE- 131 54 Nacka** **Sweden** **Phone: +46-8-88 46 33** **Email: info@subec.se** **Web: www.subec.se**

Copyright © 2026 Subec

CUSTOMIZED ROLLER GUIDE SYSTEMS

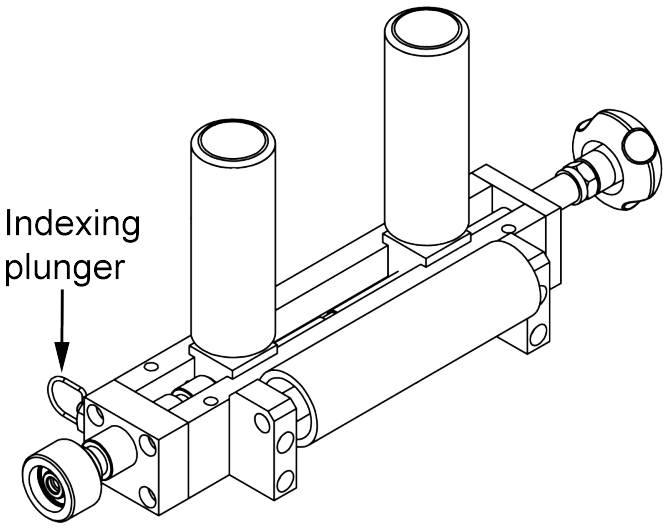

Article: 17254
Belt guide with 3 centerline presets to
triple the belt's life span

More information on request

Subec AB **Hesselmans Torg 5** **SE- 131 54 Nacka** **Sweden** **Phone: +46-8-88 46 33** **Email: info@subec.se** **Web: www.subec.se**

Copyright © 2026 Subec

PRECISION GUIDE UNIT

For rollers - Max Product Ø: 15mm

Article	Roller Type	Product Ø	Remark
10365	SS 22	0,8-1,6mm	
10784B	SL35	7,0-12,0mm	Zirconium Rollers
13834	SL35	7,0-12,0mm	With position indicators
11189A	SD 35	2-4,5mm	With position indicators
8828*	SD 35	2-4,5mm	
9480A*	SD 52	6-9,5mm	
13218	SL52	6-15mm	
9805	SD 80	7-15mm	

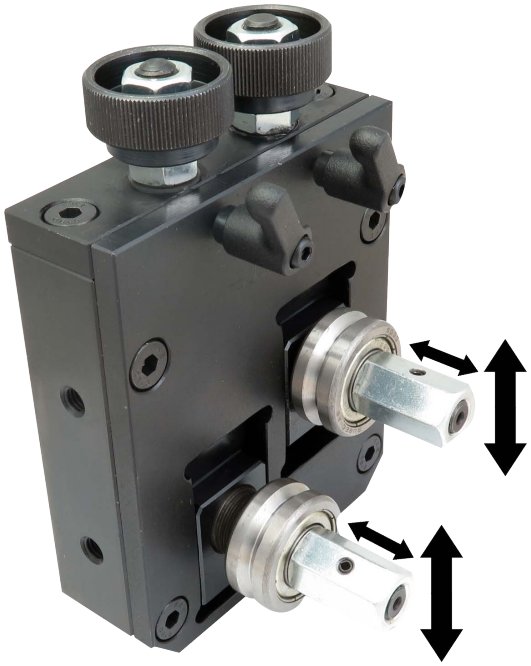

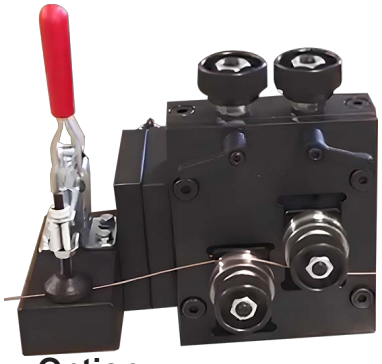

Option:
Wire clamp before
X-Head
Article: 13191

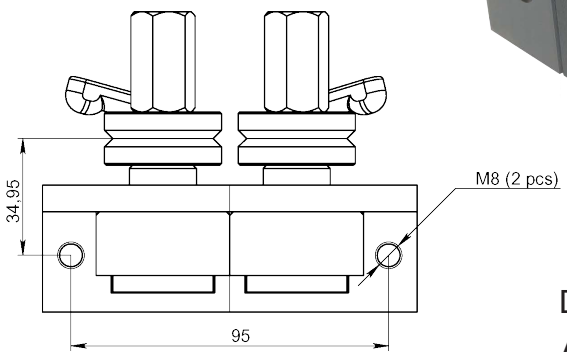

Drawing shows
Article: 08828*



Article: 11189A

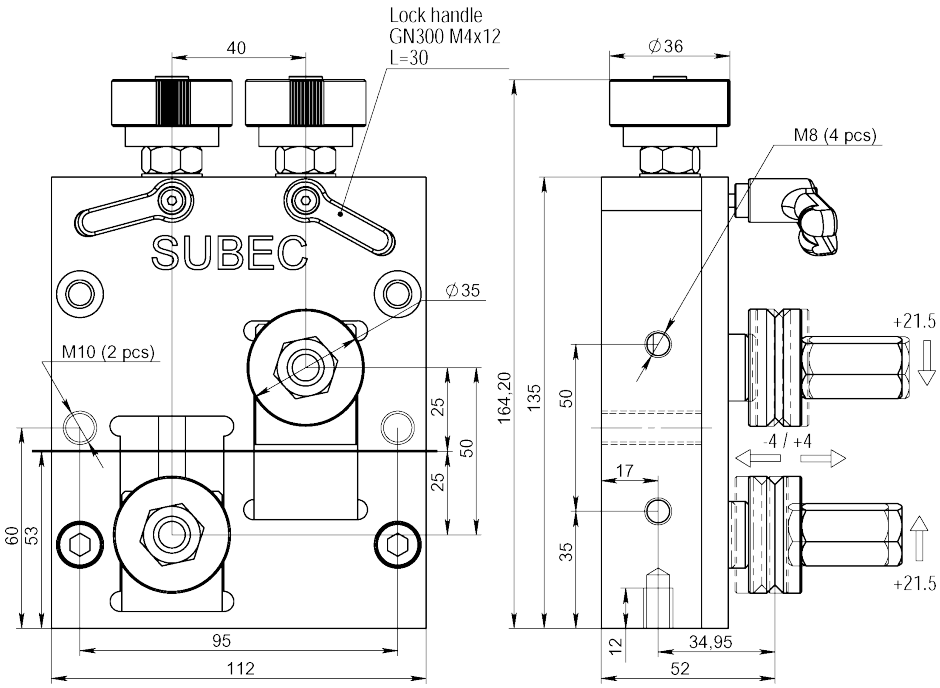

Drawing No. 3-400793-00

* Stock item

Subec AB **Hesselmans Torg 5** **SE- 131 54 Nacka** **Sweden** **Phone: +46-8-88 46 33** **Email: info@subec.se** **Web: www.subec.se**

Copyright © 2026 Subec

PRECISION GUIDE UNIT

For small sheaves - Max Product Ø: 15mm

Double Execution
Article: 11845

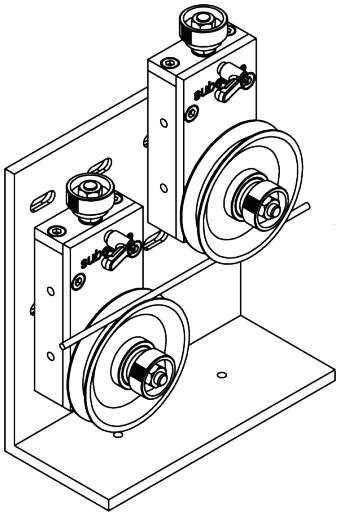

Single Execution
Article: 11844



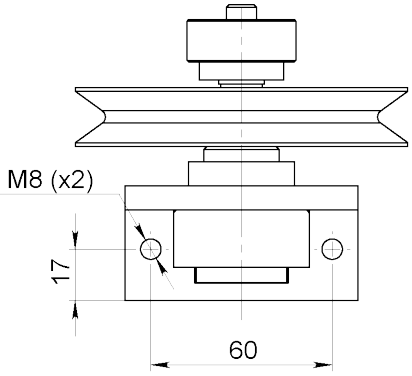

Bracket
Article: 11849

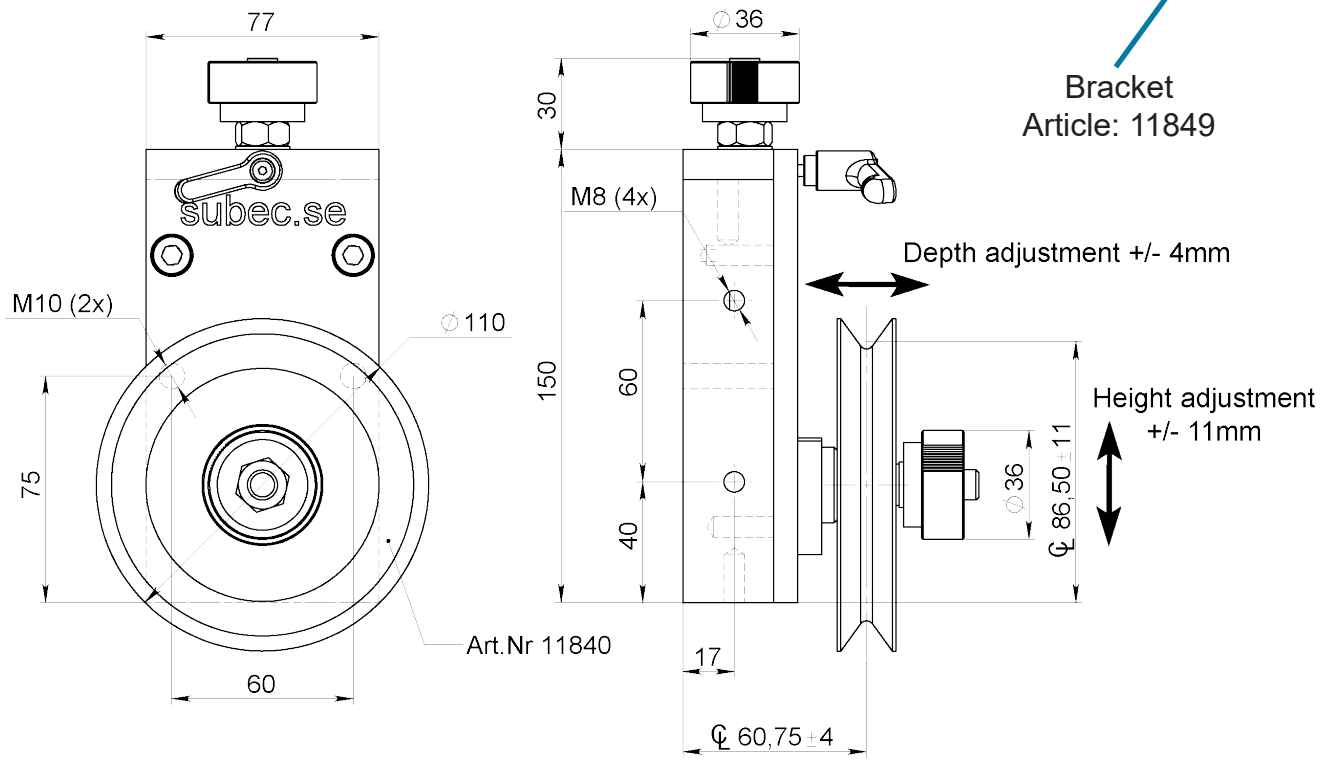

Drawing No. 3-400793-00

Subec AB **Hesselmans Torg 5** **SE- 131 54 Nacka** **Sweden** **Phone: +46-8-88 46 33** **Email: info@subec.se** **Web: www.subec.se**

Copyright © 2026 Subec

MINI ROLLER GUIDE SYSTEM

Max Product Ø: 14mm

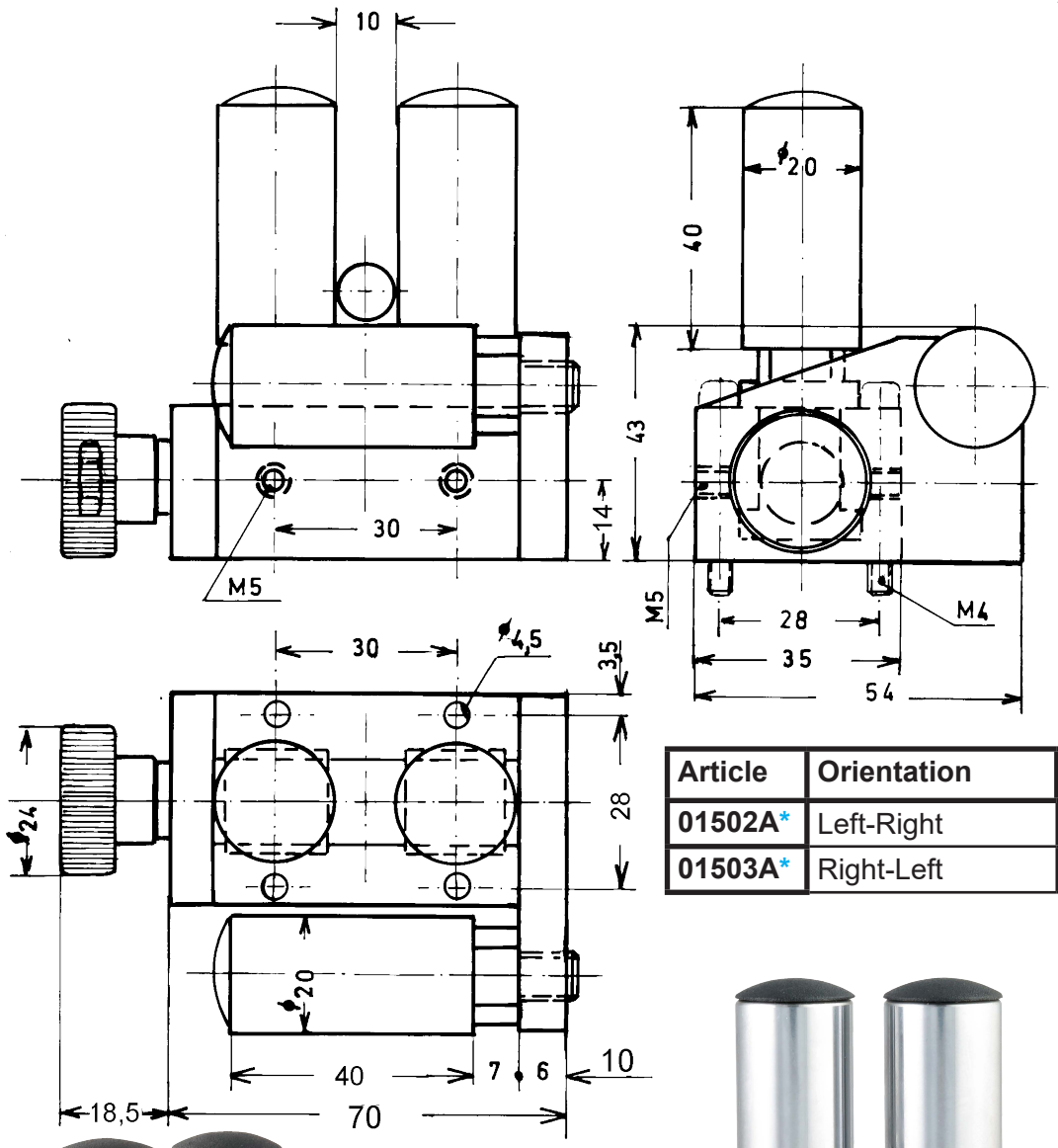

Article	Orientation	Weight
01502A*	Left-Right	0,75kg
01503A*	Right-Left	0,75kg

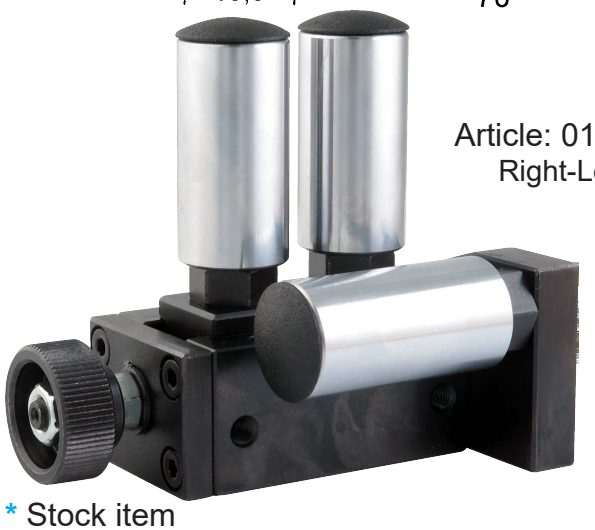

Article: 01503A
Right-Left

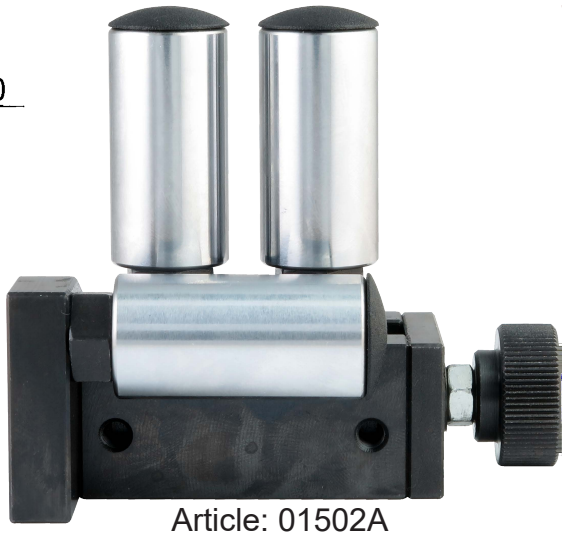

Article: 01502A
Left-Right

Drawing No. 3-400370-01

* Stock item

Subec AB **Hesselmans Torg 5** **SE- 131 54 Nacka** **Sweden** **Phone: +46-8-88 46 33** **Email: info@subec.se** **Web: www.subec.se**

Copyright © 2026 Subec

TILTABLE ADJUSTABLE ROLLER GUIDE

Max Product Ø: 13mm

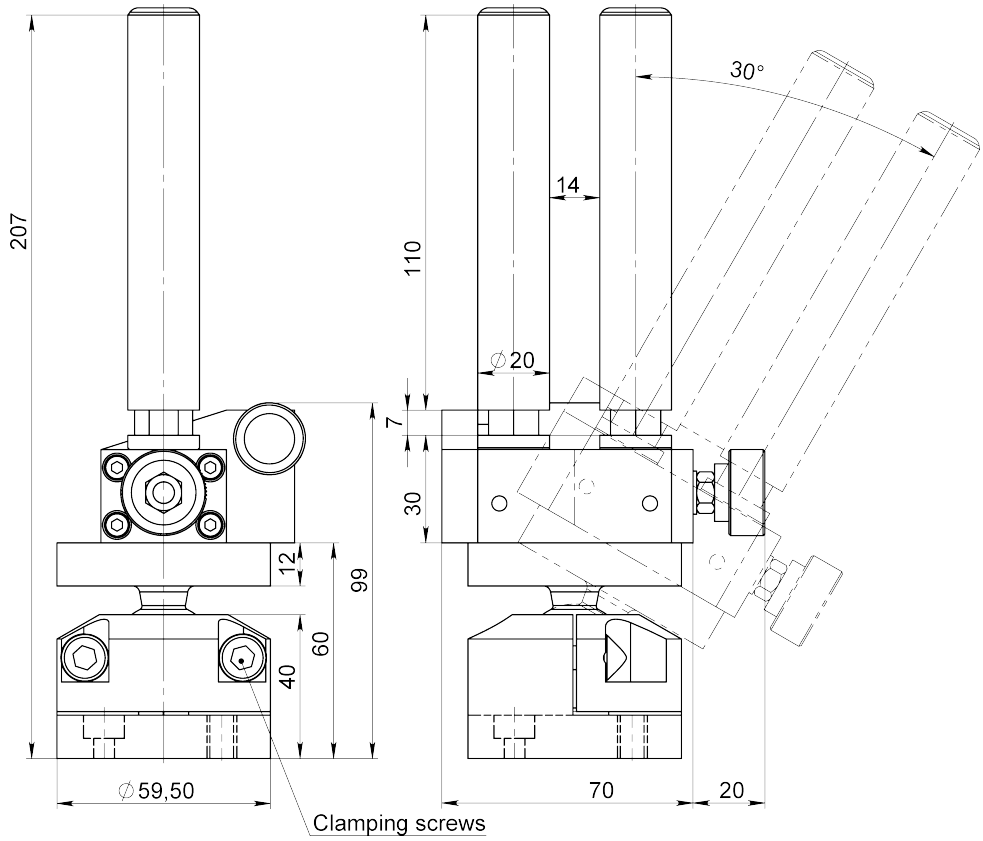



Article: 14228
Available with various rollers.



Article: 10203



Drawing No. 3-401219-00

Subec AB **Hesselmans Torg 5** **SE- 131 54 Nacka** **Sweden** **Phone: +46-8-88 46 33** **Email: info@subec.se** **Web: www.subec.se**

Copyright © 2026 Subec

ROLLER GUIDE SYSTEM
WITH ROTATING ADJUSTMENT

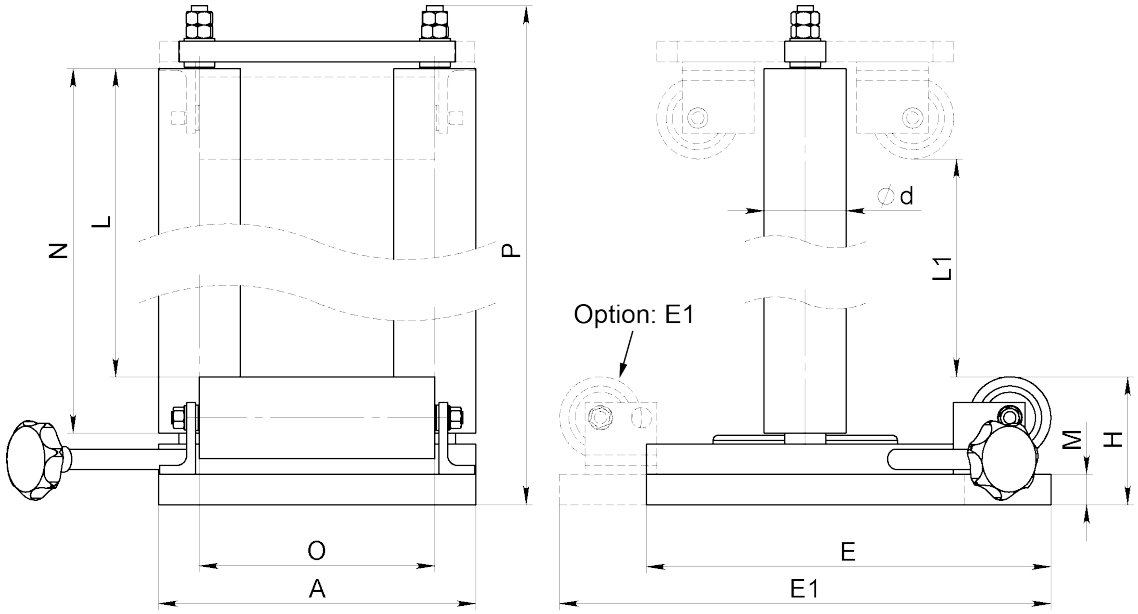



Article: 1790*

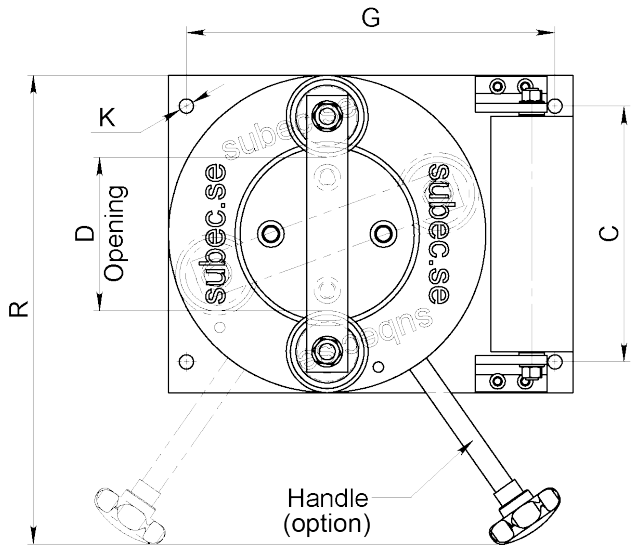

Article	A	C	Ød	D	E	E1	G	H	K	L	L1	M	N	O	P	R
11985	310	250	80	0-150	-	480	360	125	M16	1945	-	30	2000	230	2132	458
07230	310	250	80	0-150	-	480	360	125	M16	945	-	30	1000	230	1132	458
05955	482	250	80	0-150	-	472	360	260	M16	-	1156	30	1300	230	1567	458
05849	310	250	80	0-150	395	-	360	125	M16	1245	-	30	1300	230	1432	458
1790A*	100	70	30	0-10	-	130	40	40	Ø6,6	95	-	8	110	60	163	-

Drawing No. 3-400419-00

* Stock item

Subec AB **Hesselmans Torg 5** **SE- 131 54 Nacka** **Sweden** **Phone: +46-8-88 46 33** **Email: info@subec.se** **Web: www.subec.se**

Copyright © 2026 Subec

V-GUIDE SYSTEM

Product range: Ø 10-90mm

With pneumatic open/close

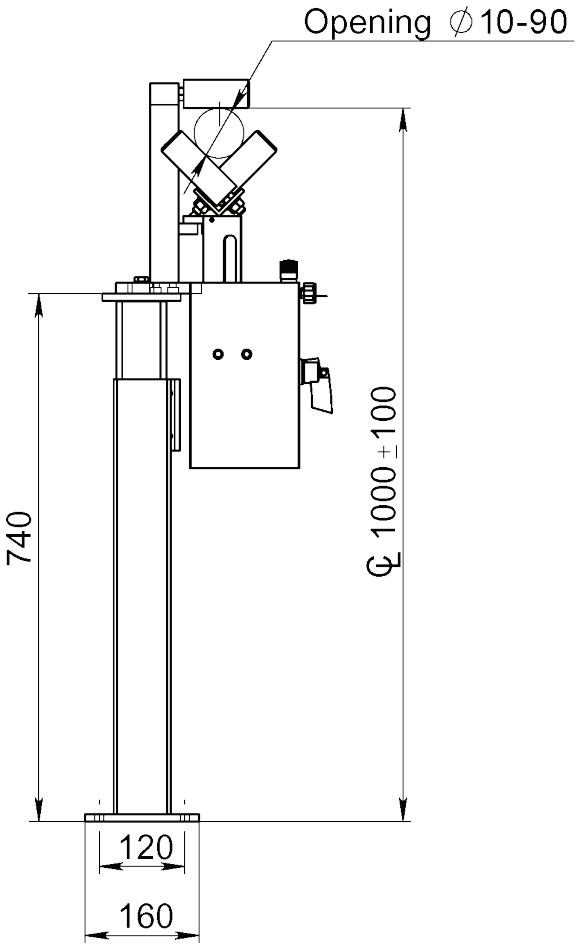

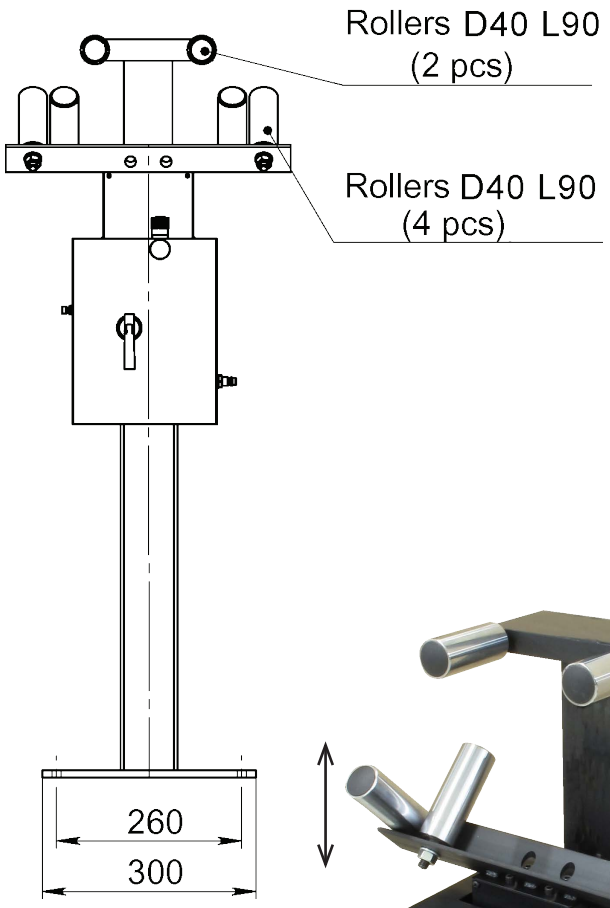



Article: 13256

Drawing No. 3-400946-00

Subec AB **Hesselmans Torg 5** **SE- 131 54 Nacka** **Sweden** **Phone: +46-8-88 46 33** **Email: info@subec.se** **Web: www.subec.se**

Copyright © 2026 Subec

ROLLER GUIDE SYSTEM

Max Product Ø: 14mm

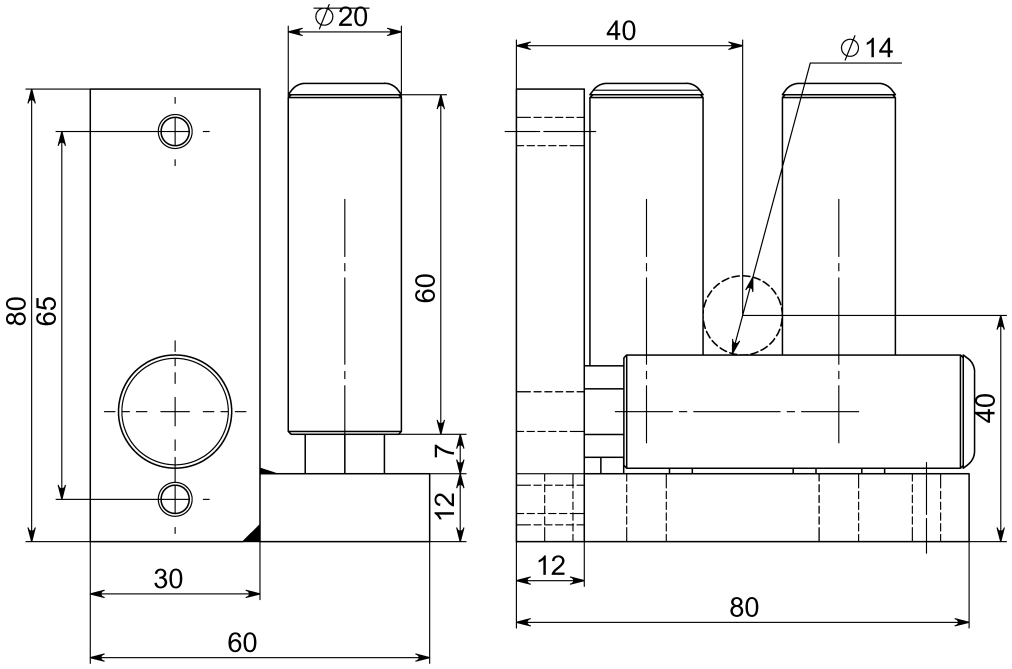

Article: 07211*
Weight : 0,73k

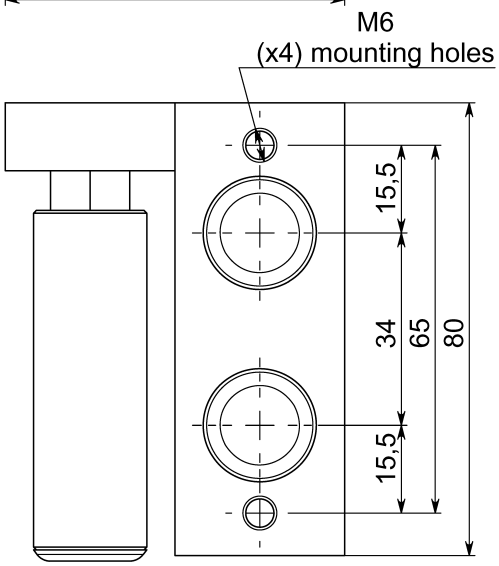



Article: 6758
4 Roller Execution
With D20 L40 Rollers
Opening 10mm

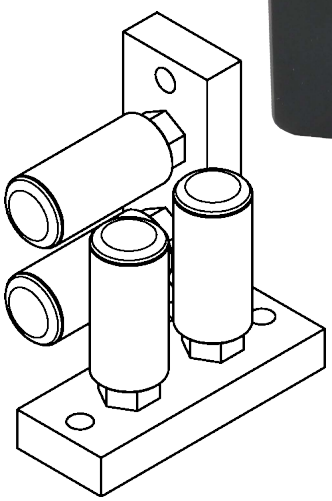

Drawing No. 3-400742-00

* Stock item

Subec AB **Hesselmans Torg 5** **SE- 131 54 Nacka** **Sweden** **Phone: +46-8-88 46 33** **Email: info@subec.se** **Web: www.subec.se**

Copyright © 2026 Subec

ROTARY GUIDE UNIT
WITH D50 STEEL ROLLERS

Max Product Ø: 20mm

Mounted Pulleys			
Article	Material	Bearing	Weight
08427*	Steel	619/9-2Z	0,2kg
12906A*	Alu+Ceramic	619/9-2Z	0,05kg

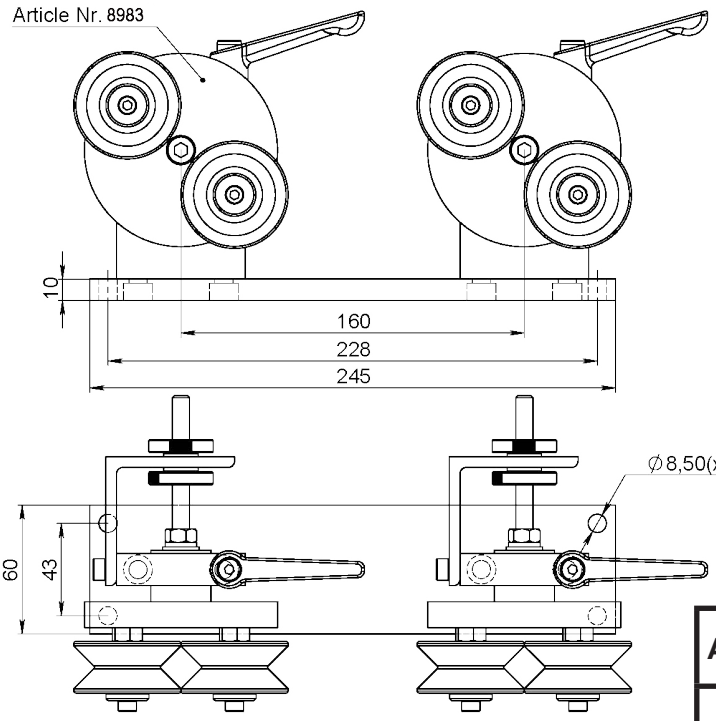

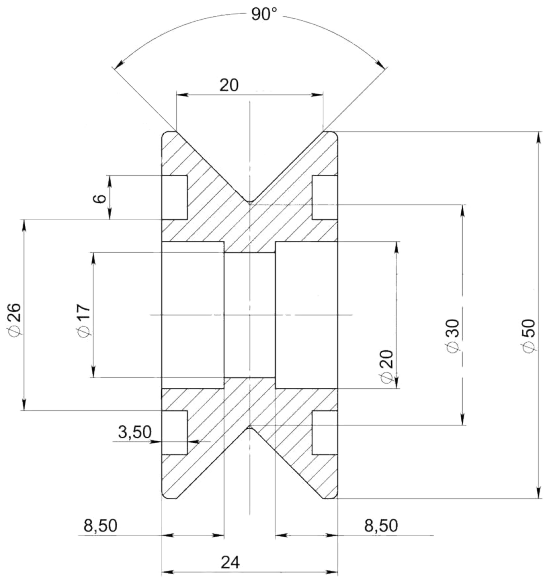

Article	Execution	Rubber spring
08983*	Single	Without
08984	Single	With
08985	Double	With
08245*	Double	Without



Article: 08245*
Weight: 5kg

Drawing No. 3-300450-01

* Stock item

Subec AB **Hesselmans Torg 5** **SE- 131 54 Nacka** **Sweden** **Phone: +46-8-88 46 33** **Email: info@subec.se** **Web: www.subec.se**

Copyright © 2026 Subec

ROTARY GUIDE UNIT



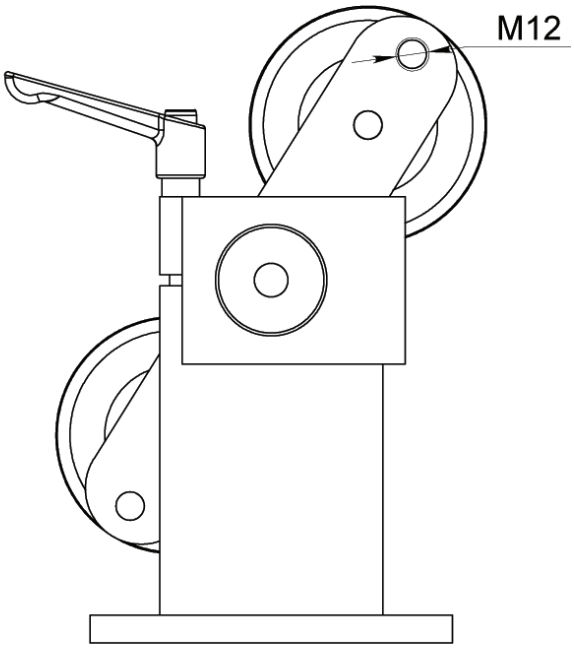

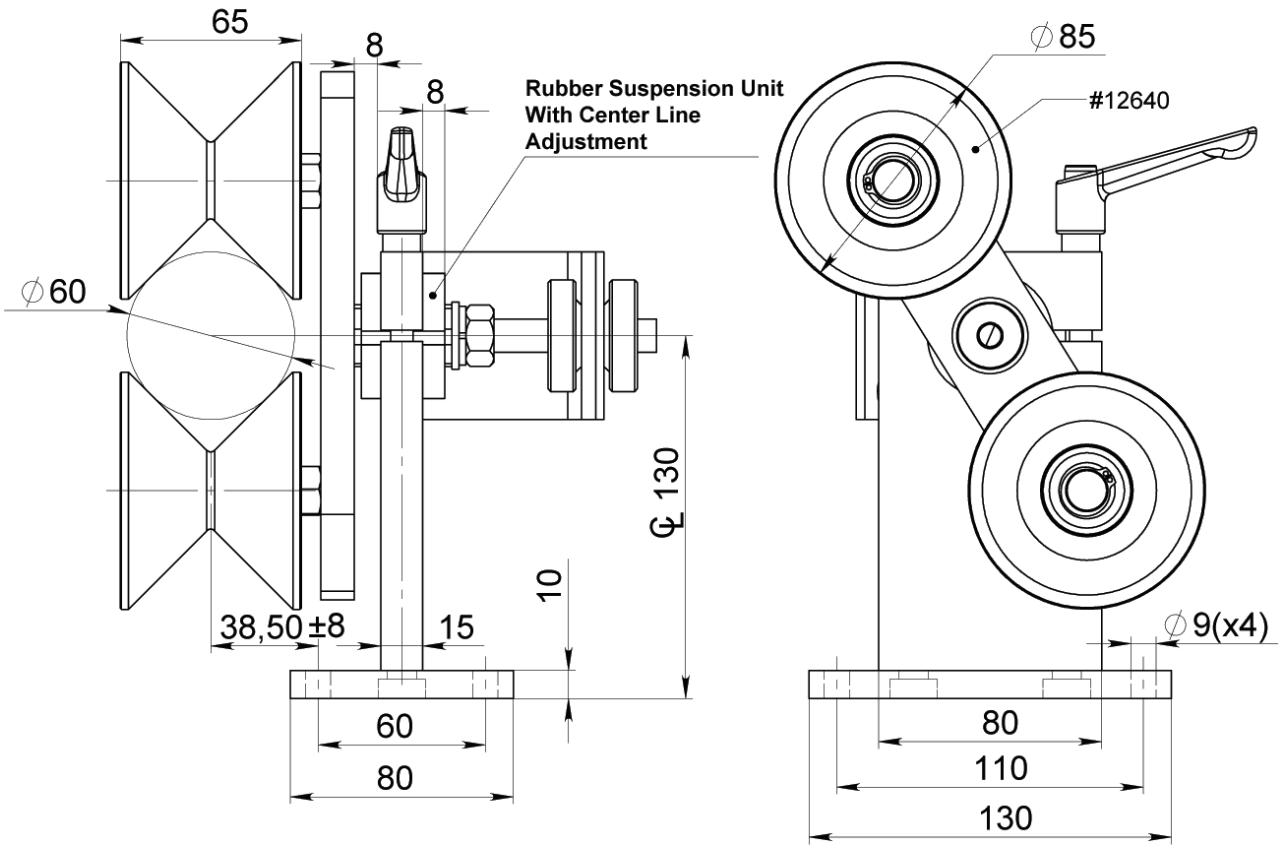

Drawing No. 3-400450-01

Subec AB **Hesselmans Torg 5** **SE- 131 54 Nacka** **Sweden** **Phone: +46-8-88 46 33** **Email: info@subec.se** **Web: www.subec.se**

Copyright © 2026 Subec

ROTARY GUIDE UNIT

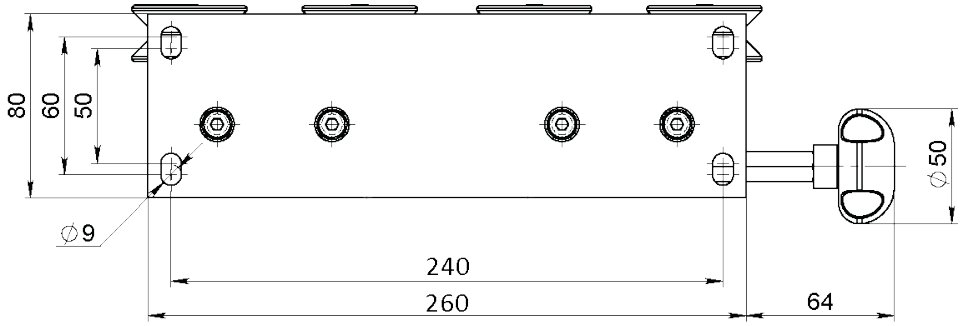

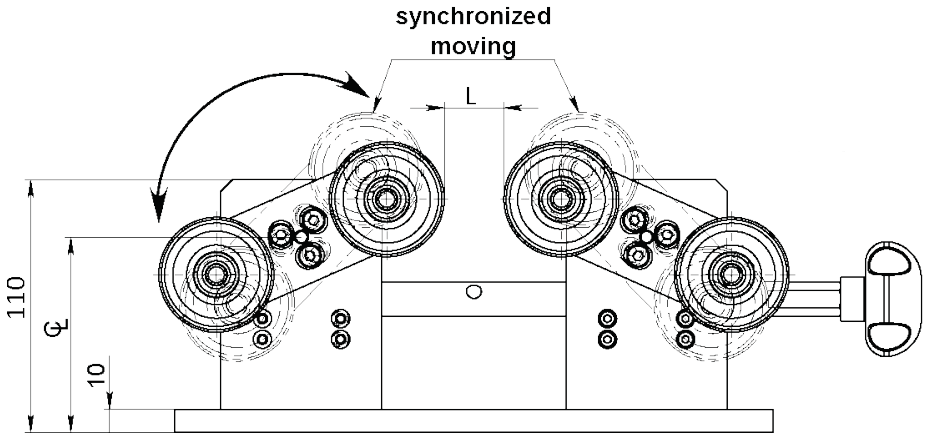

Article	Pulley	CL	L	Product range
13227	Alu. Ceramic Coated. Flat Groove. Type SL50 Article:13253	85	30	Groove acc. spec.
	Alu. Ceramic Coated. V-Groove 90°. Type SL50 Article: 12906*			Ø 2-20mm
12682	Alu. Cr_2O_3 Coated. V-Groove 90°. Type SL65 Article: 11015	85	8	Ø 2-30mm

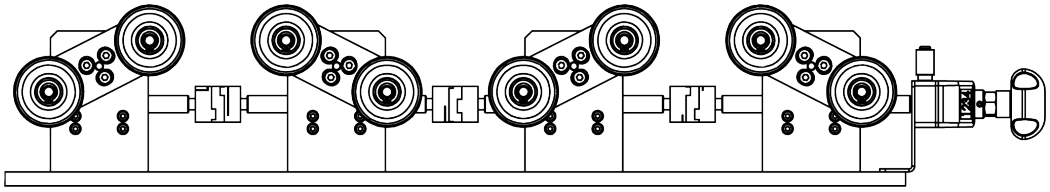

Example of synchronised quad system

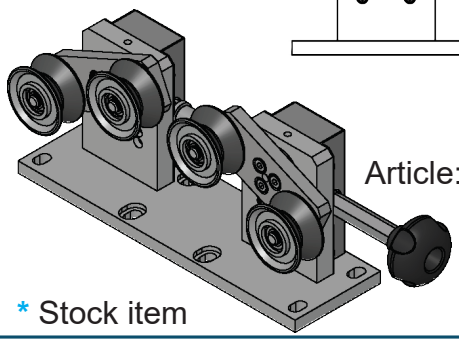

Article: 13227

* Stock item

Drawing No. 3-401341-00

Subec AB **Hesselmans Torg 5** **SE- 131 54 Nacka** **Sweden** **Phone: +46-8-88 46 33** **Email: info@subec.se** **Web: www.subec.se**

Copyright © 2026 Subec

ROTARY GUIDE UNIT

Synchronized roller adjustment

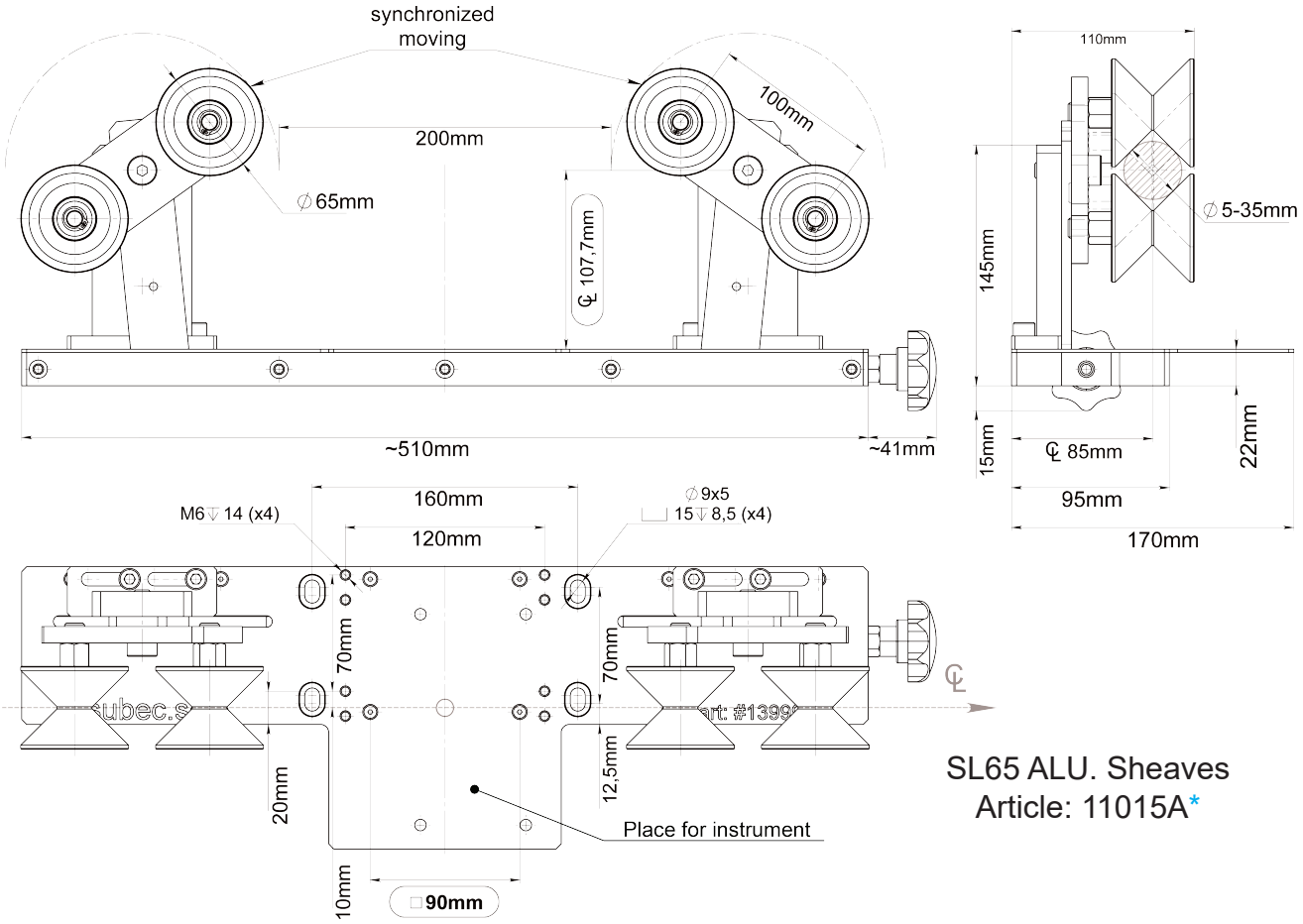

SL65 ALU. Sheaves
Article: 11015A*

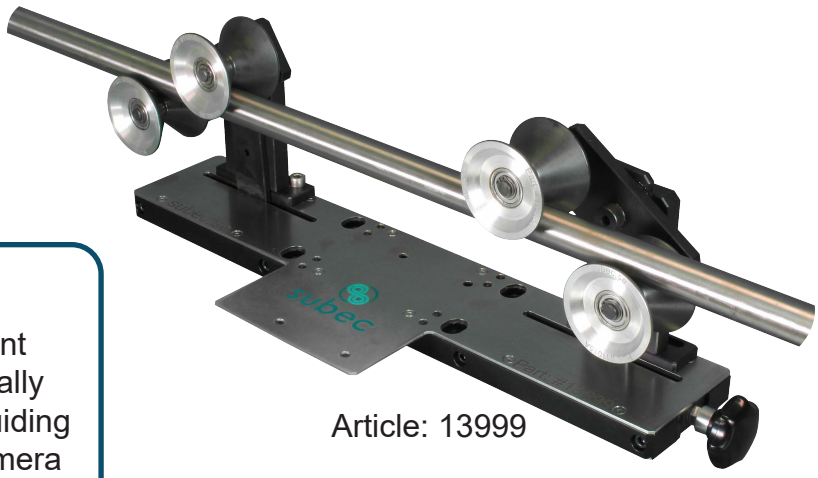

Article: 13999

Info:
Rotary guide unit with one hand wheel and synchronised adjustment of inlet/outlet guide rollers. Espacially developed for precisely aligned guiding of measuring instruments e.g. Camera inspection systems, diameter gauges, lump and neckdown detectorsy.

Drawing No. 3-401341-00

* Stock item

Subec AB **Hesselmans Torg 5** **SE- 131 54 Nacka** **Sweden** **Phone: +46-8-88 46 33** **Email: info@subec.se** **Web: www.subec.se**

Copyright © 2026 Subec

ROTARY GUIDE UNIT

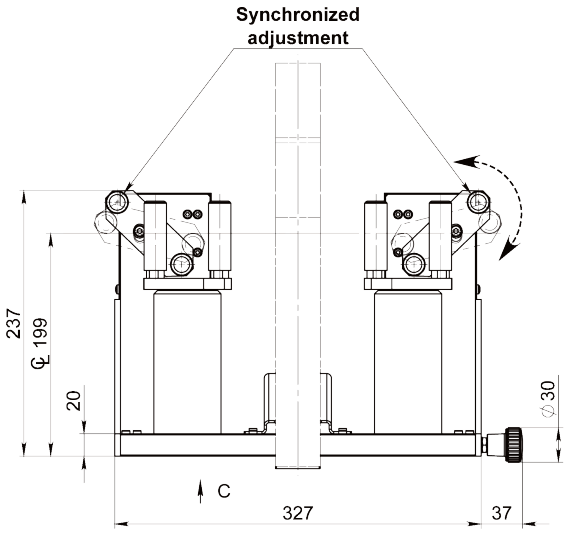

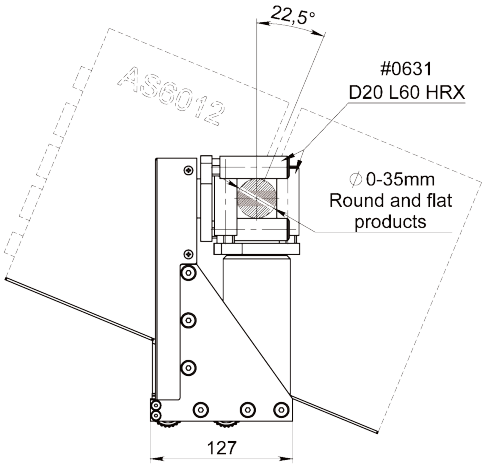

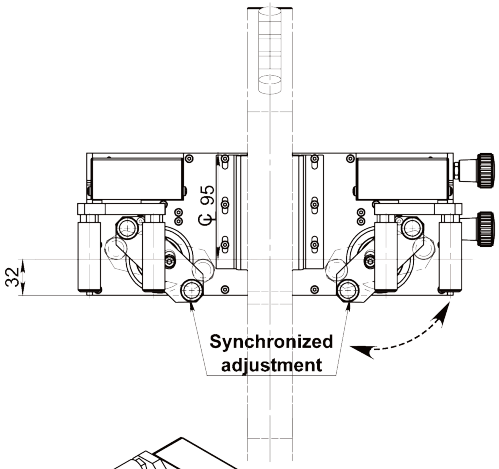

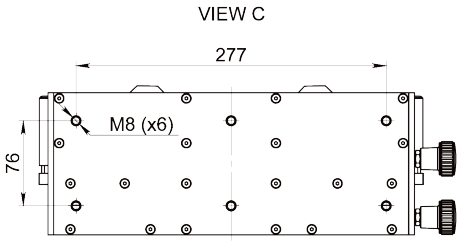

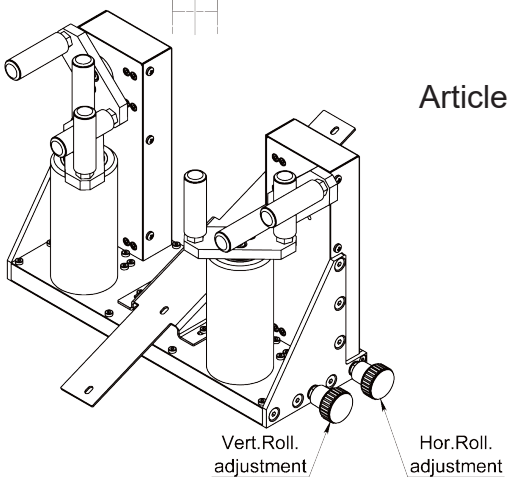

Article: 14974



Info:
Diamater gauge placed at an angle for accurate measuring also of flat products

Article	CL	Ø-Gauge
14974	199	AS6012
15141	309	AS6050

Drawing No. 3-401341-00

Subec AB **Hesselmans Torg 5** **SE- 131 54 Nacka** **Sweden** **Phone: +46-8-88 46 33** **Email: info@subec.se** **Web: www.subec.se**

Copyright © 2026 Subec

ROTARY GUIDE UNIT

Product range: Ø 0-50mm

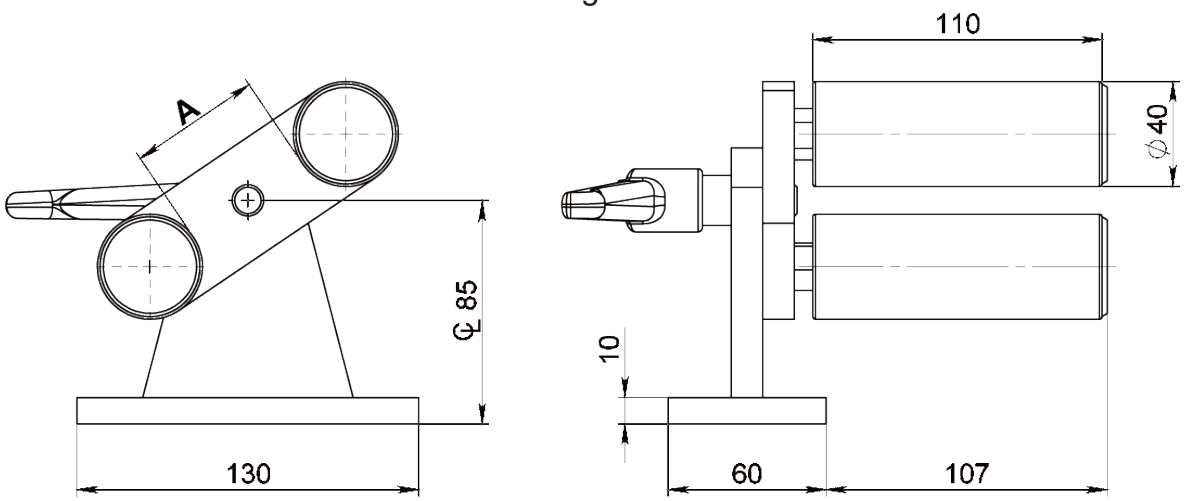

Article: 13880

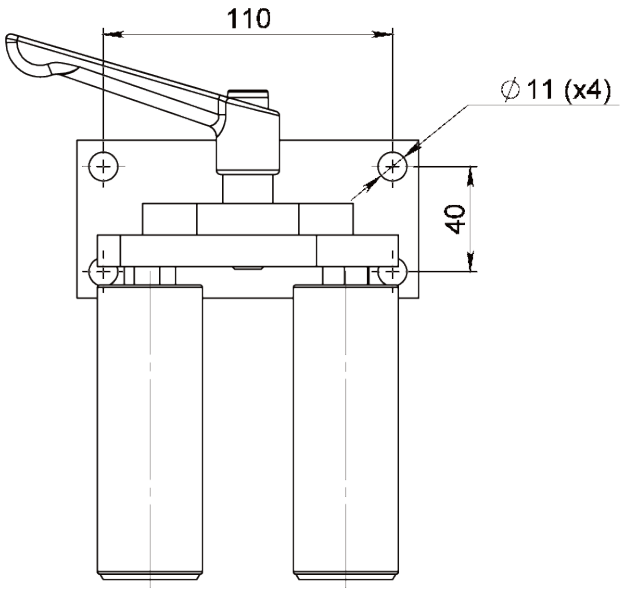



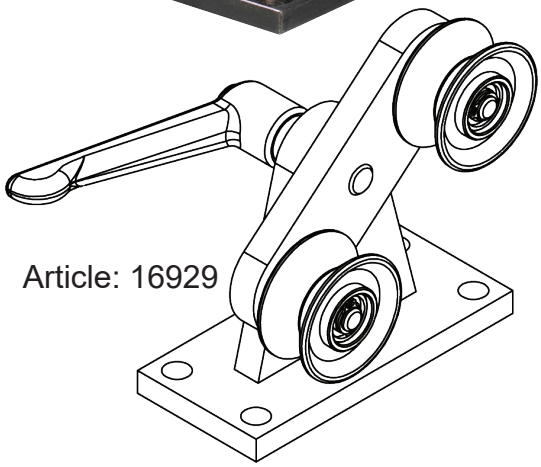

Article: 16929

Article	Product Ø	A	Type
16929	1-20mm	40	D50 Pulley with Zr2O3 coated groove: 11836 D50 Steel Pulley: 8427 D50 Alu. Pulley with ceramic coated groove: 12906
13880	0-50mm	50	D40 L110 **ROLLERS**

Drawing No. 3-401282-00

Subec AB **Hesselmans Torg 5** **SE- 131 54 Nacka** **Sweden** **Phone: +46-8-88 46 33** **Email: info@subec.se** **Web: www.subec.se**

Copyright © 2026 Subec

ROTARY GUIDE UNIT

Product range: 0-35mm
Supports round and flat products

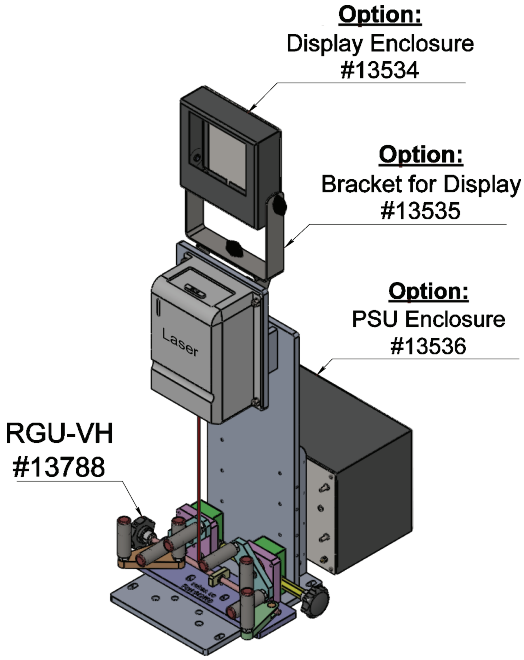

Example of implementation with laser length counter console.
Article: 12931

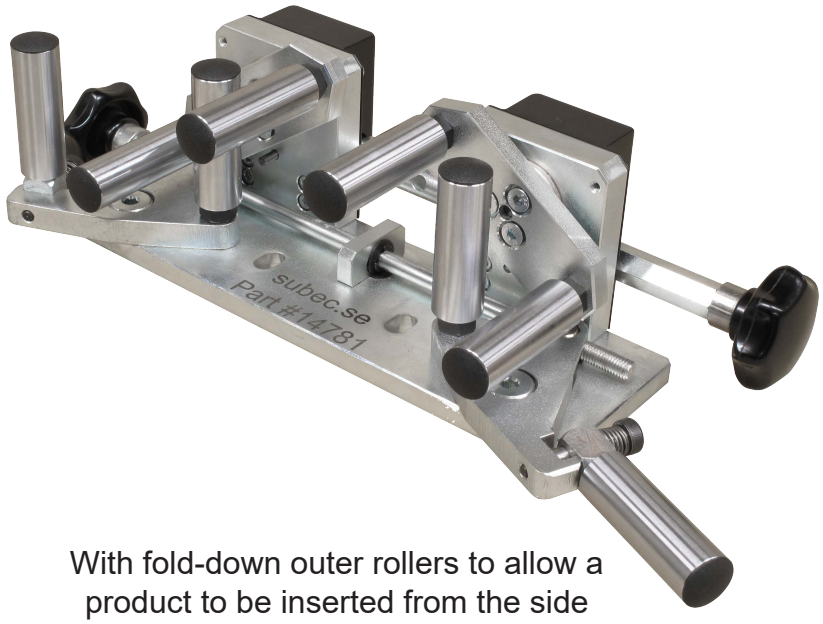

With fold-down outer rollers to allow a product to be inserted from the side
Article: 14781

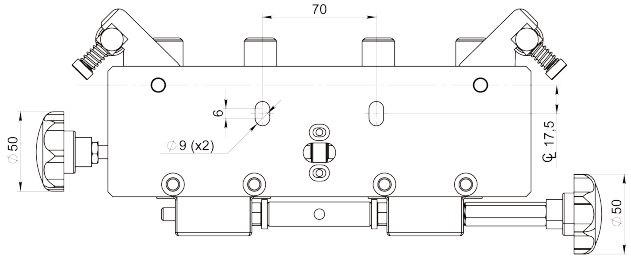

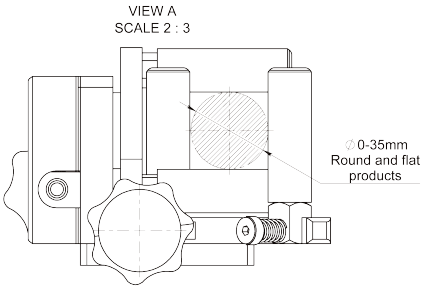

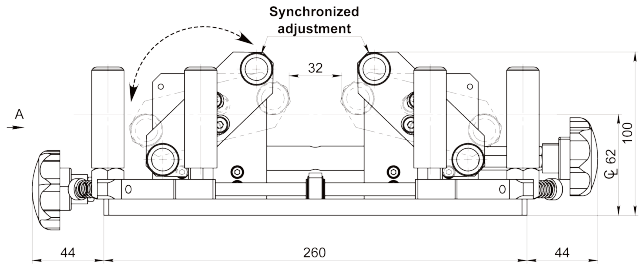

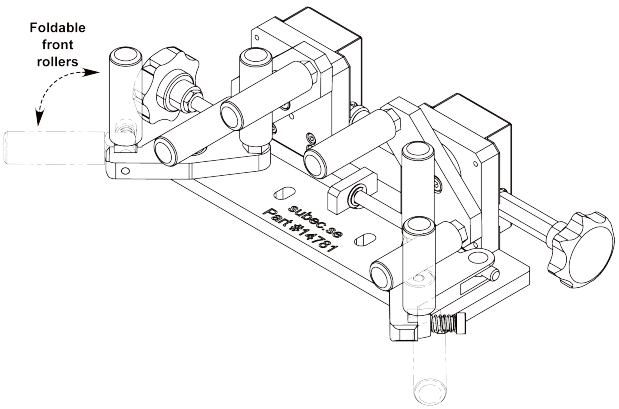

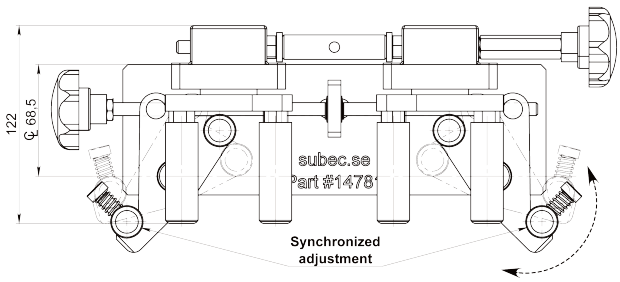

Drawing No. 3-401341-00

Subec AB **Hesselmans Torg 5** **SE- 131 54 Nacka** **Sweden** **Phone: +46-8-88 46 33** **Email: info@subec.se** **Web: www.subec.se**

Copyright © 2026 Subec

ROTARY GUIDE UNIT

Max Product Ø: 30mm

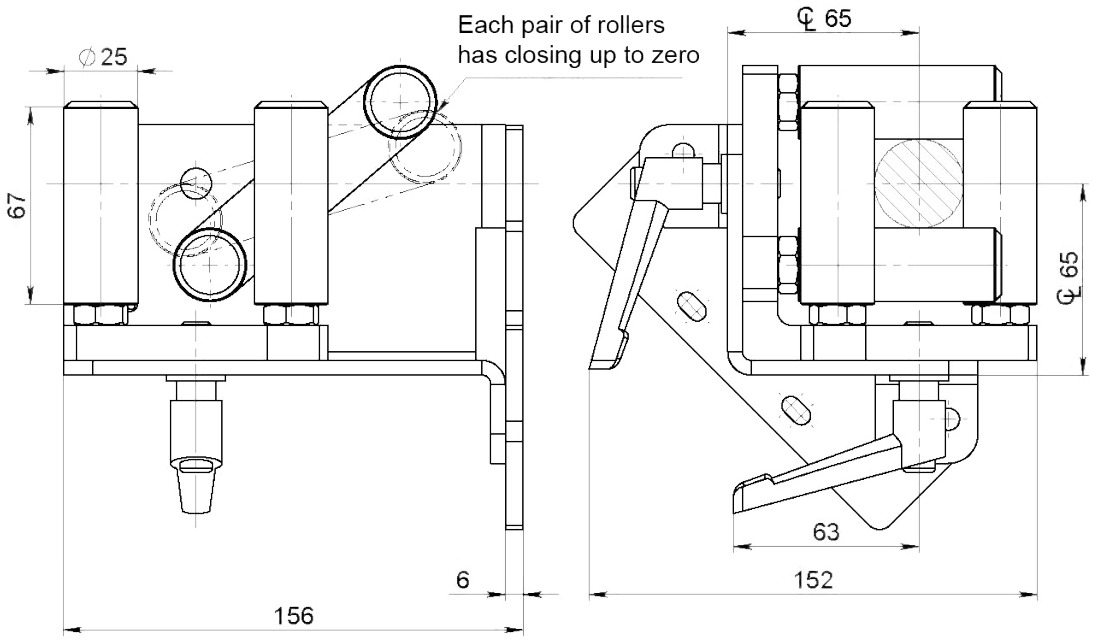

45° orientation

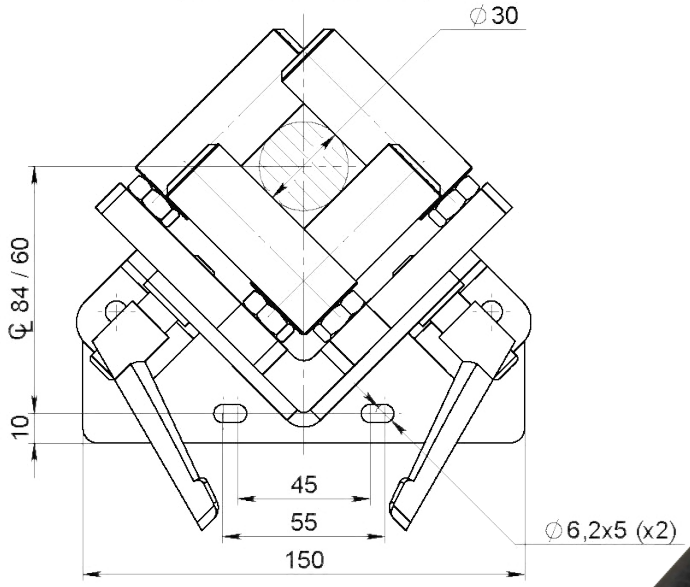

Rollers:
Article: 14159

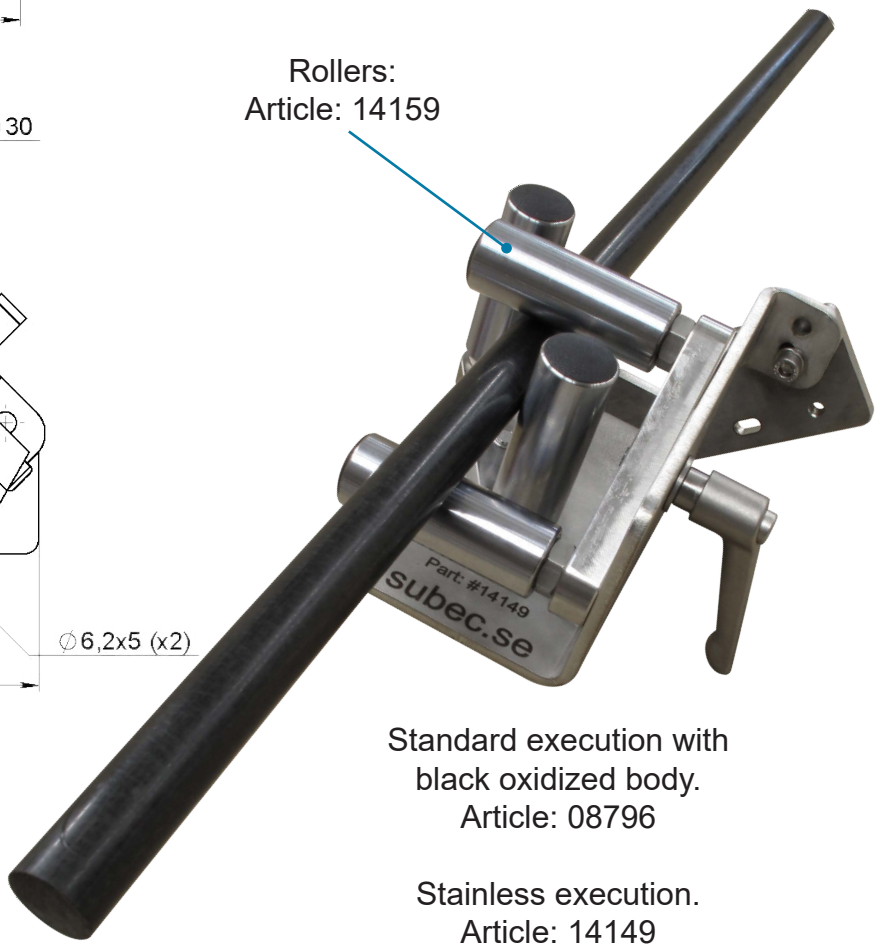

Info:
Great guide for diameter gauges for round and flat products

Standard execution with black oxidized body.
Article: 08796

Stainless execution.
Article: 14149

Drawing No. 3-400431-00

Subec AB **Hesselmans Torg 5** **SE- 131 54 Nacka** **Sweden** **Phone: +46-8-88 46 33** **Email: info@subec.se** **Web: www.subec.se**

Copyright © 2026 Subec

ROTARY GUIDE UNIT

Product range: 20-40mm

Rotary Inlet Guide for Diameter L&N Gauges and Length counters
Availabe with various brackets for mounting.

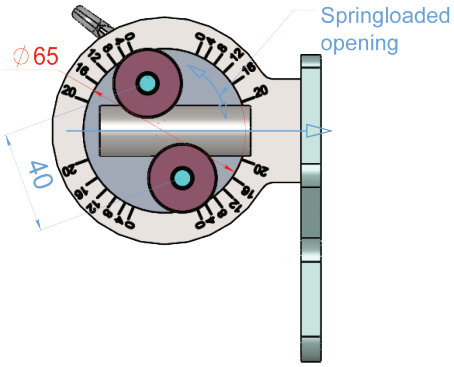

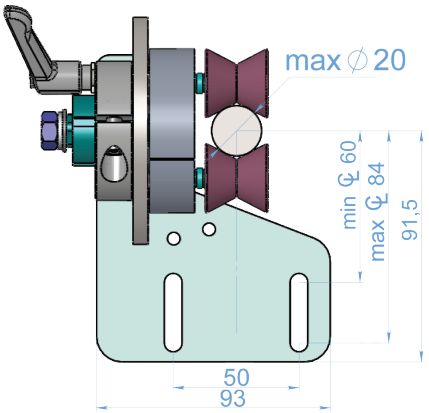

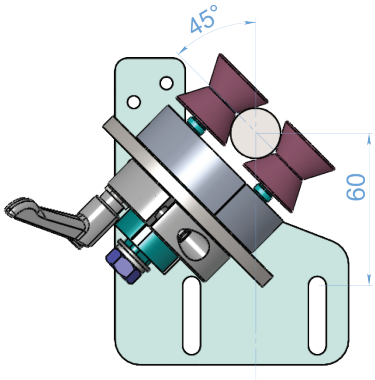

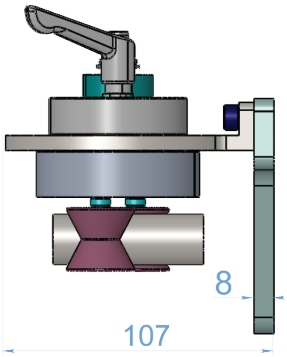

Article	Max Product Ø	Zirconium Rollers	Note
14142B	20mm	13917, V-125°	
14804B*	20mm	13917, V-125°	Spring loaded
14920*	40mm	14919, V-110°	
14921*	40mm	14919, V-110°	Spring loaded

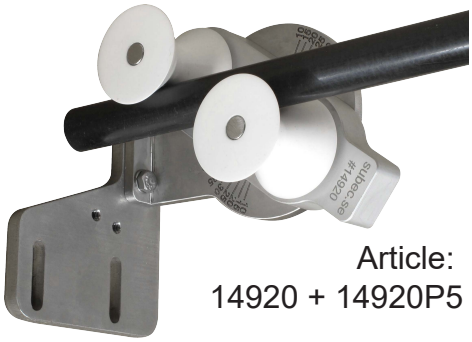

Article:
14920 + 14920P5 (Bracket)



Article:
14921A + 15140P5 (Bracket)

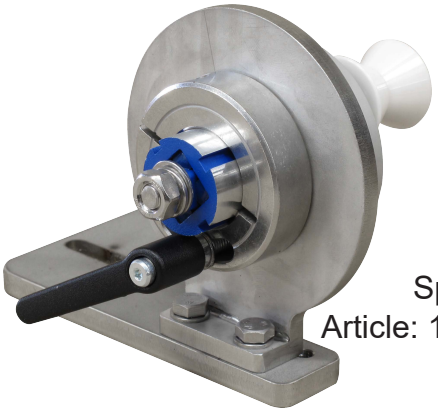

Spring loaded
Article: 14804B + 14920P5
(Bracket)

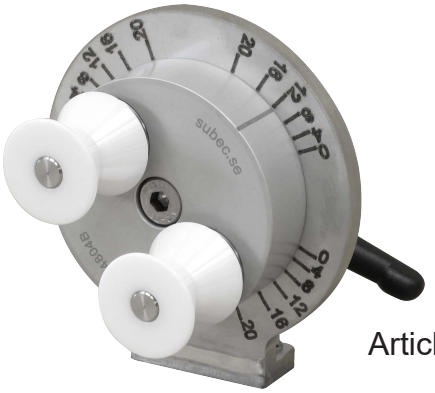

Article: 14804B

Drawing No. 3-300450-01

* Stock item

Subec AB **Hesselmans Torg 5** **SE- 131 54 Nacka** **Sweden** **Phone: +46-8-88 46 33** **Email: info@subec.se** **Web: www.subec.se**

Copyright © 2026 Subec

V-GUIDE SYSTEM

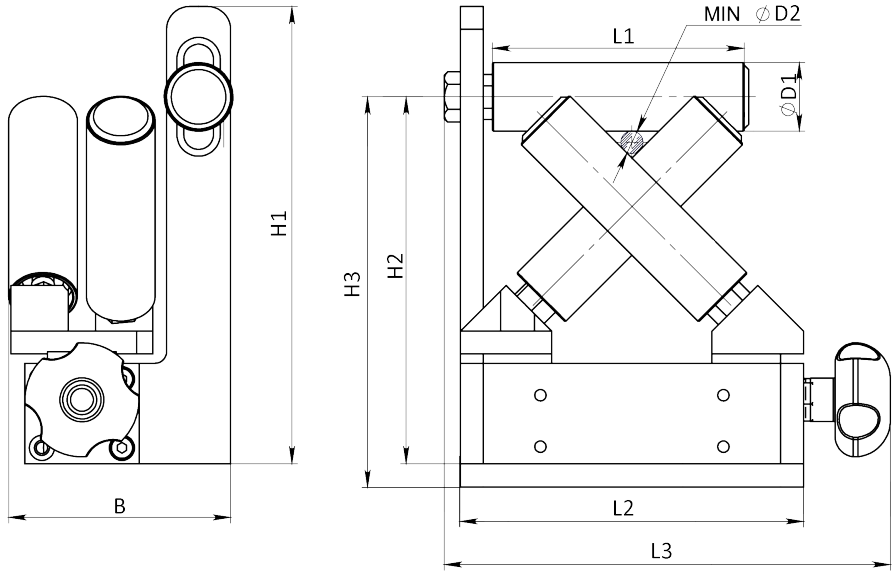

Info:
Precision guiding for wires and cables in the range of 0 to 50mm diameter.
The clever design ensures that lumps, knots or joints can snake through.

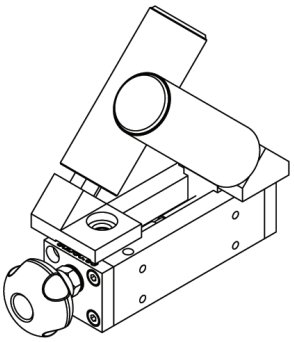

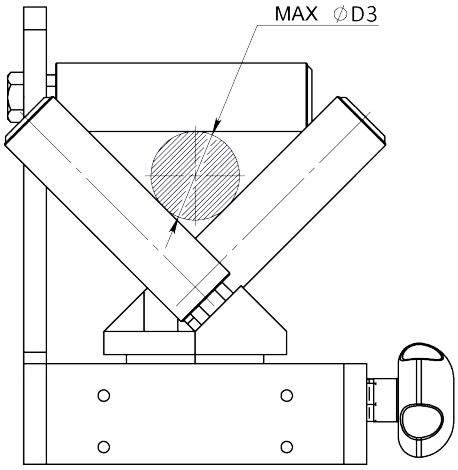



Also available without horizontal roller.

Article: 08557A*
8558A* + 8559A* + 8560
Weight: 2,5kg

Article	D1	L1	D2	D3	L2	L3	H1	H2	H3	B	Execution
8557A*	20	60	2,6	20	94	113	118	94,5±5	102,5±5	148	Double
8558A*	20	60	2,6	20	94	113	118	94,5±5	-	64	Single R-L
8559A*	20	60	2,6	20	94	113	118	94,5±5	-	64	Single L-R
12157	30	110	5	40	150	176	200	160±10	168±10	214	Double
11175	30	110	5	40	150	176	200	160±10	-	97	Single R-L
11159	30	110	5	40	150	176	200	160±10	-	97	Single L-R
08865	40	110	6,2	35	150	176	220	168±5	176±5	274	Double
08866	40	110	6,2	35	150	176	220	168±5	-	127	Single R-L
08867	40	110	6,2	35	150	176	220	168±5	-	127	Single L-R
08868	40	150	0	50	220	176	220	186±5	194±5	276	Double
08869	40	150	0	50	220	176	220	186±5	-	128	Single R-L
08870	40	150	0	50	220	176	220	186±5	-	128	Single L-R

Drawing No. 3-401105-00

* Stock item

Subec AB **Hesselmans Torg 5** **SE- 131 54 Nacka** **Sweden** **Phone: +46-8-88 46 33** **Email: info@subec.se** **Web: www.subec.se**

Copyright © 2026 Subec

V-GUIDE SYSTEM

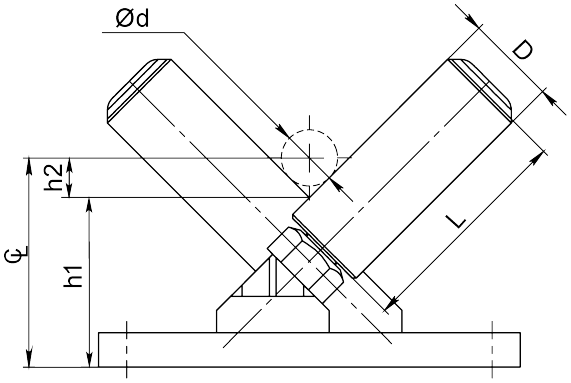

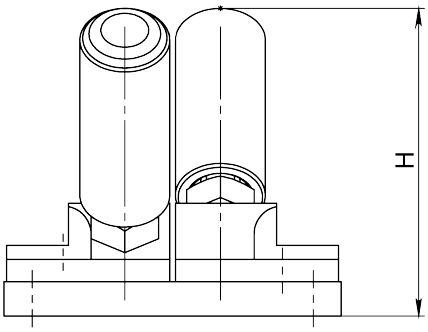

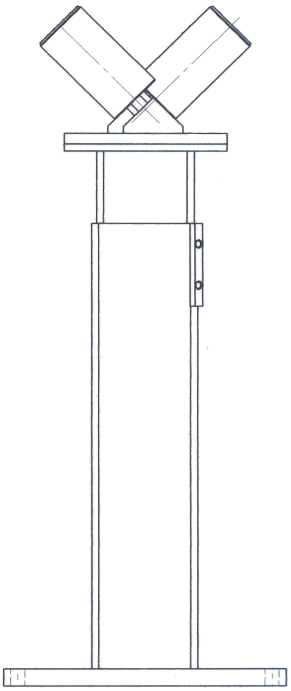

Option:
Height Adjustable Stand

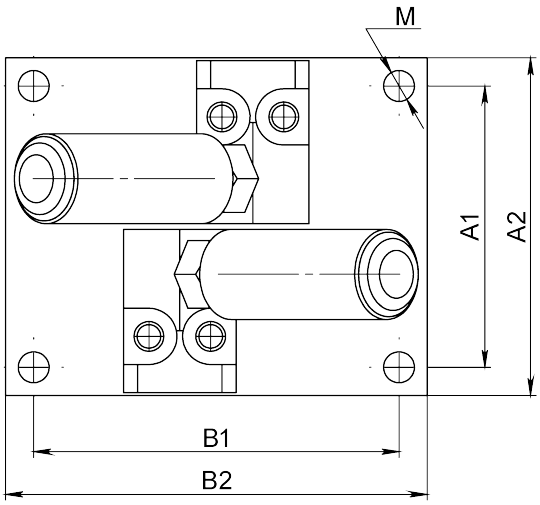



Article: 09784*
Weight: 0,39kg

The Rollers are in a 90° V-Formation . CL = (h1 + h2).
h2 = (Ød/2)/sin(45).

Article	D	L	Ød	h1	H	A1	A2	B1	B2	M	Remark
09784*	16	40	10-25mm	30	55	50	60	65	75	6,5 x4	
12690*	30	90	25-60mm	45	107,5	110	130	-	110	8 x2	
08217	40	110	25-75mm	82	150	160	200	160	200	12,5 x4	Stainless
13203*	40	110	25-75mm	82	150	160	200	160	200	12,5 x4	
13271	50/65	110	30-75mm	100	158	160	200	160	200	12,5 x4	PU65 Shore A
12154*	60	160	30-100mm	96	192	160	200	160	200	12,5 x4	
02134*	80	150	20-150mm	106	198	160	200	160	200	12,5 x4	
06394	80	200	20-200mm	106	235	160	200	160	200	12,5 x4	
06870	80	350	20-350mm	103	339	160	200	160	200	12,5 x4	POM
09526	100	200	50-150mm	110	242	160	200	160	200	12,5 x4	PE100 Steel Sleeve
10258	100	400	50-450mm	110	384	160	200	160	200	12,5 x4	Chromium Plated

Drawing No. 3-400531-00

* Stock item

Subec AB **Hesselmans Torg 5** **SE- 131 54 Nacka** **Sweden** **Phone: +46-8-88 46 33** **Email: info@subec.se** **Web: www.subec.se**

Copyright © 2026 Subec

HEAVY DUTY V-GUIDE SYSTEM

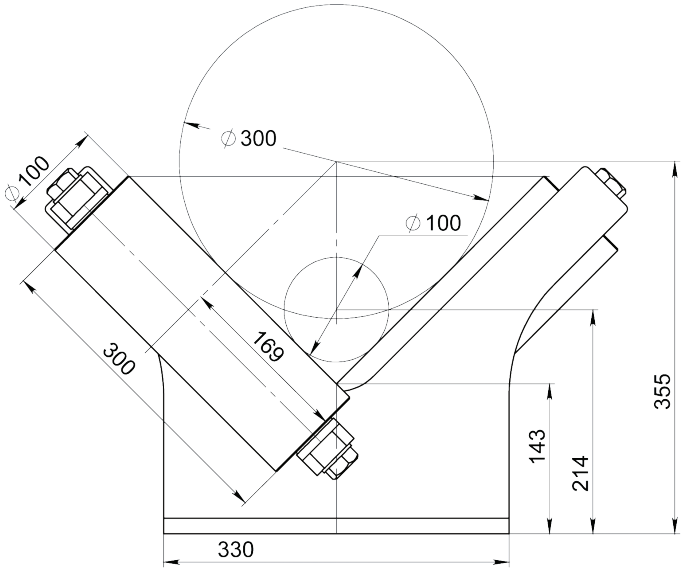

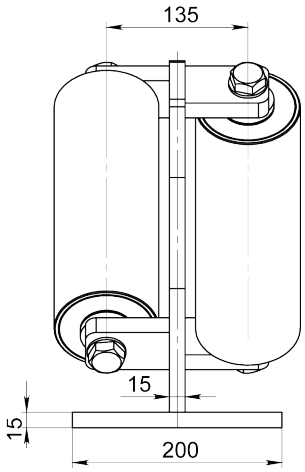

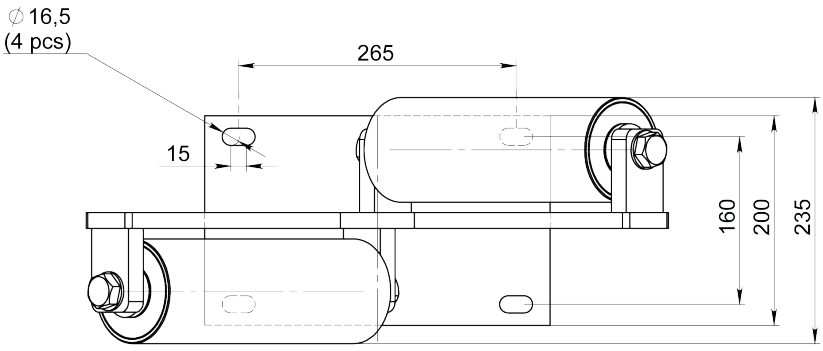



V-guide system
Article: 15025

Height Adjustable Stand
Article: 16498

Drawing No. 3-400531-00

Subec AB **Hesselmans Torg 5** **SE- 131 54 Nacka** **Sweden** **Phone: +46-8-88 46 33** **Email: info@subec.se** **Web: www.subec.se**

Copyright © 2026 Subec

CERAMIC FINGER GUIDE

Product range: Ø 4-25mm

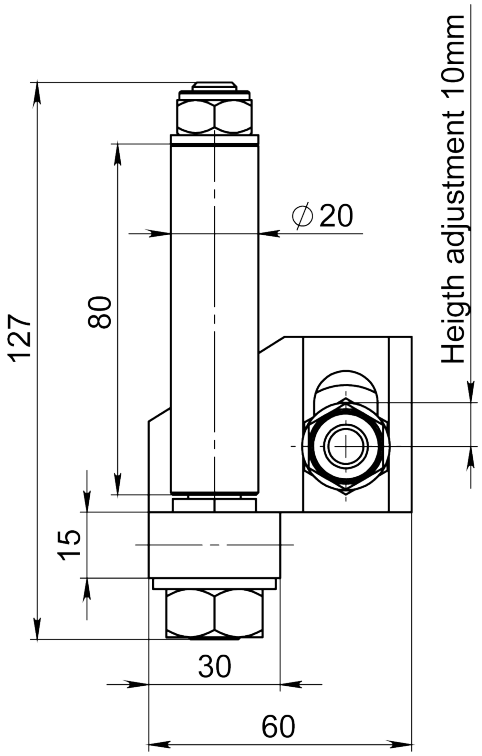

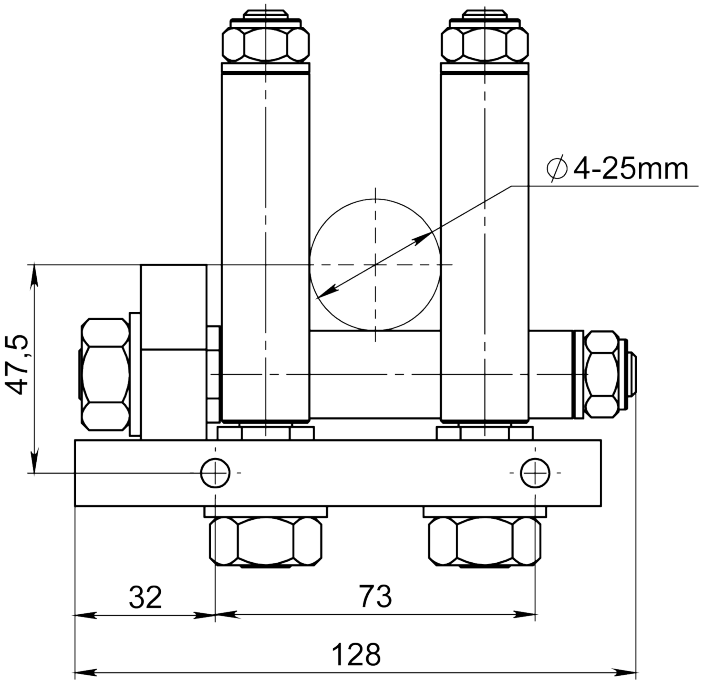



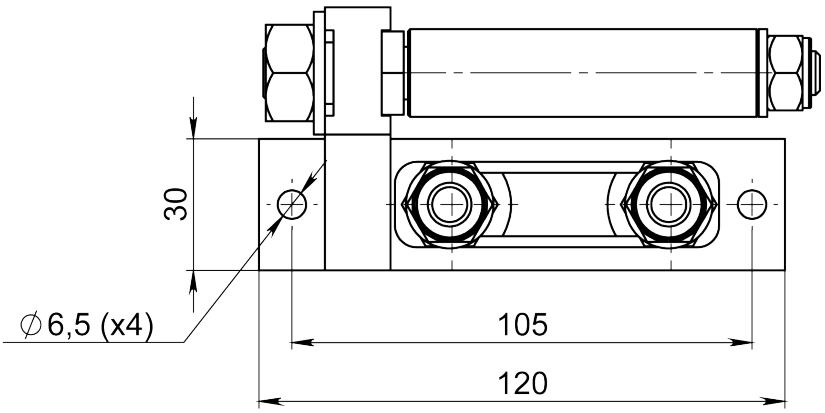

Article: 10386

Info:
The ceramic fingers are stationary.

Drawing No. 3-401256-00

Subec AB **Hesselmans Torg 5** **SE- 131 54 Nacka** **Sweden** **Phone: +46-8-88 46 33** **Email: info@subec.se** **Web: www.subec.se**

Copyright © 2026 Subec

ROLLER GUIDE SYSTEM

Max Product Ø: 30mm

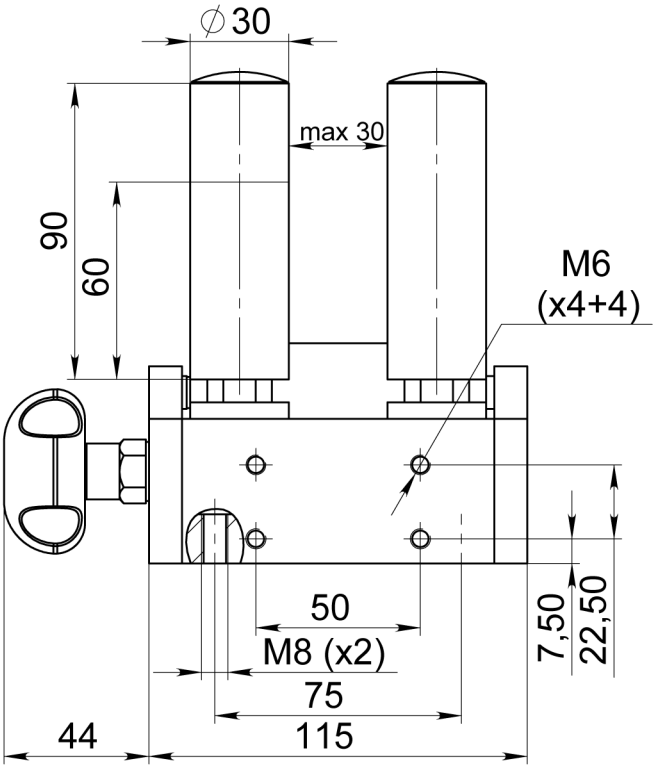

Article: 05943
Left-Right-Direction

Article: 06019
Right-Left-Direction

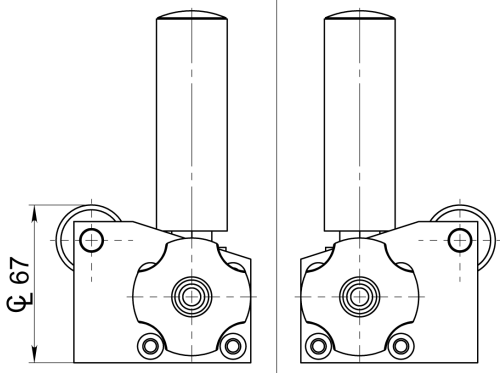

Article	Vert. Rollers	Orientation
05943*	L60	Left-Right
06019*	L60	Right-Left
01297*	L90	Left-Right
01298*	L90	Right-Left

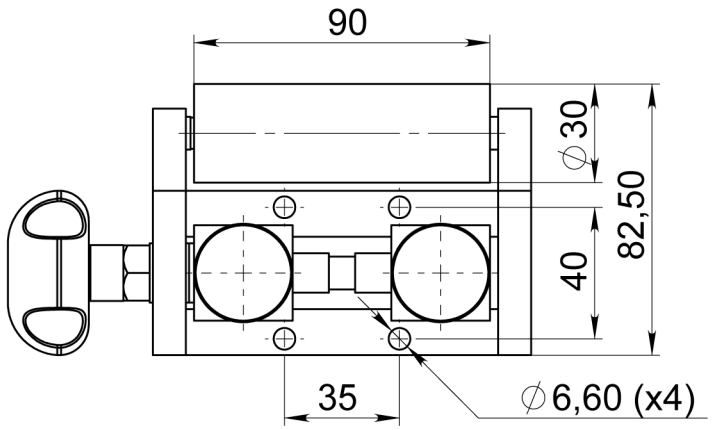



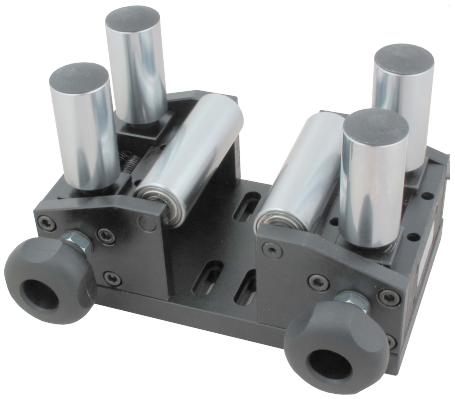

Option:
Article: 06112
05943, 06019
Including
Connection plate

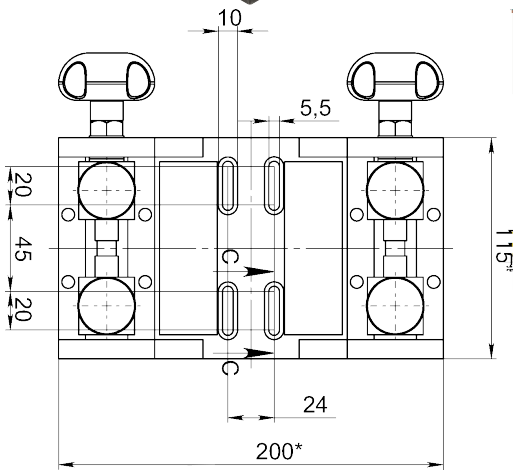

Drawing No. 3-400282-02

* Stock item

Subec AB **Hesselmans Torg 5** **SE- 131 54 Nacka** **Sweden** **Phone: +46-8-88 46 33** **Email: info@subec.se** **Web: www.subec.se**

Copyright © 2026 Subec

ROLLER GUIDE SYSTEM

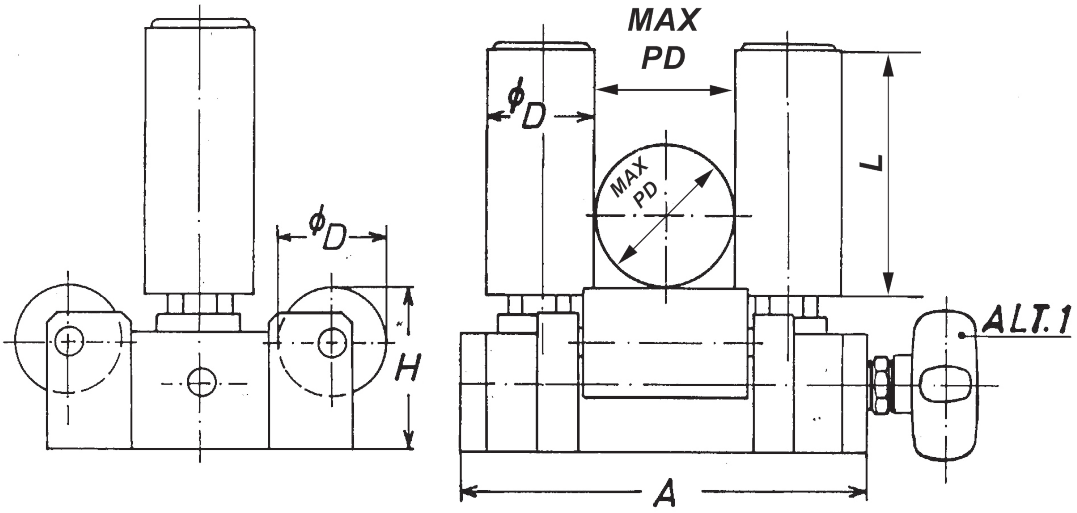

Roller guide system
with 2 horizontal rollers

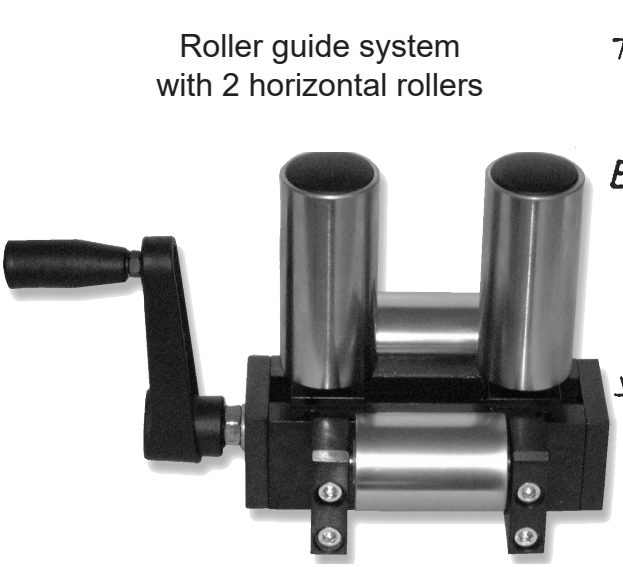

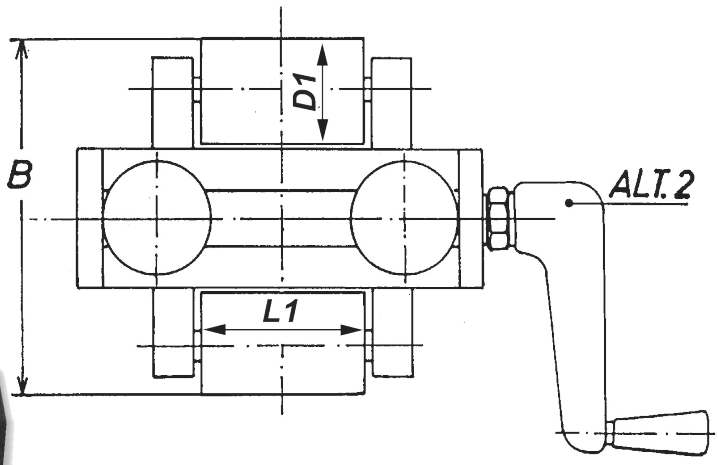

Article	A	B	ØD	ØD1	Max Prod Ø	H	L	L1
01789	150	114	30	30	70	56	110	60
01788	150	134	30	40	70	61	110	60
01666	150	114	30	30	70	56	60	60
06028	150	114	30	40	70	56	90	60
05665	150	134	40	40	60	61	250	60
01480	150	134	40	40	60	61	90	60
03767	220	134	40	40	125	60	110	110

For mounting measures see : Draw. No. 1-300430-00

Drawing No. 3-400277-00

Subec AB **Hesselmans Torg 5** **SE- 131 54 Nacka** **Sweden** **Phone: +46-8-88 46 33** **Email: info@subec.se** **Web: www.subec.se**

Copyright © 2026 Subec

ADJUSTABLE V-GUIDE SYSTEM

Product range: Ø 0-40mm

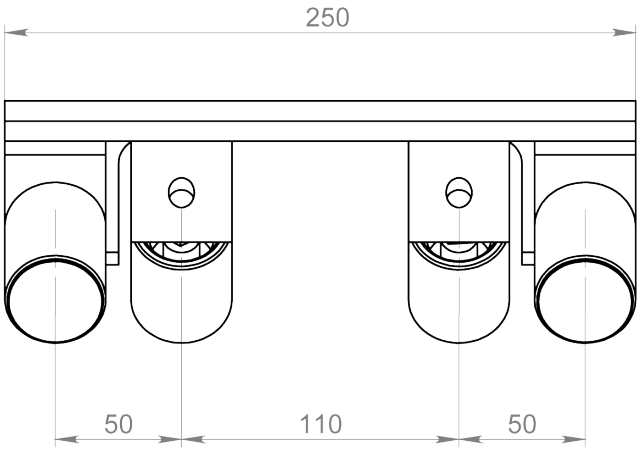

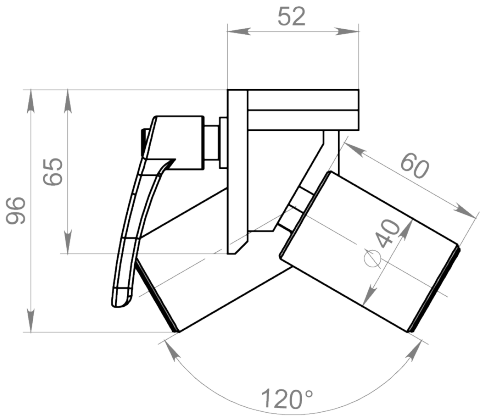

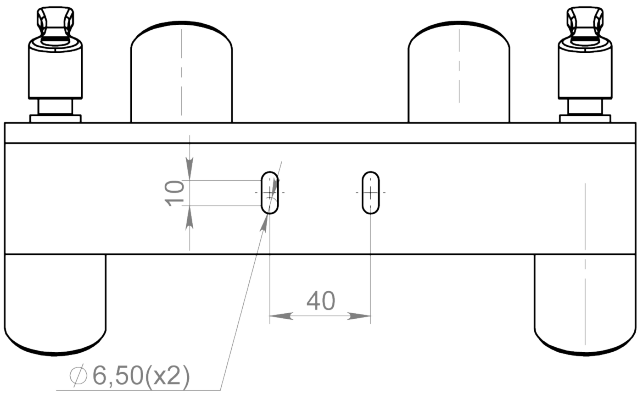

Article: 08253

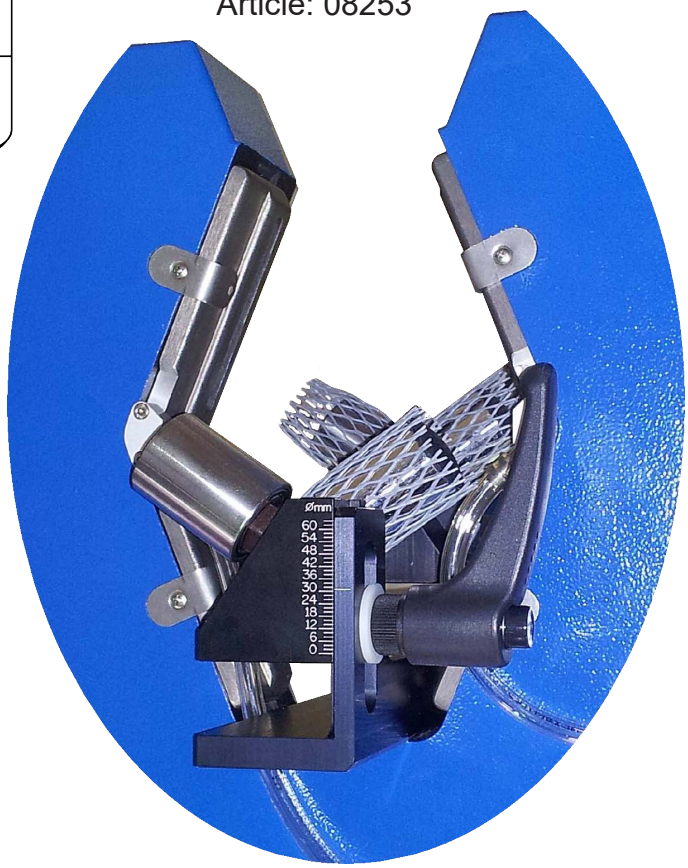

Example of application :
Guiding products through Lump- and Neckdown- or Diameter gauges.

Drawing No. 3-400995-00

Subec AB **Hesselmans Torg 5** **SE- 131 54 Nacka** **Sweden** **Phone: +46-8-88 46 33** **Email: info@subec.se** **Web: www.subec.se**

Copyright © 2026 Subec

SPRINGLOADED ROLLER GUIDE

Max Product Ø: 50mm

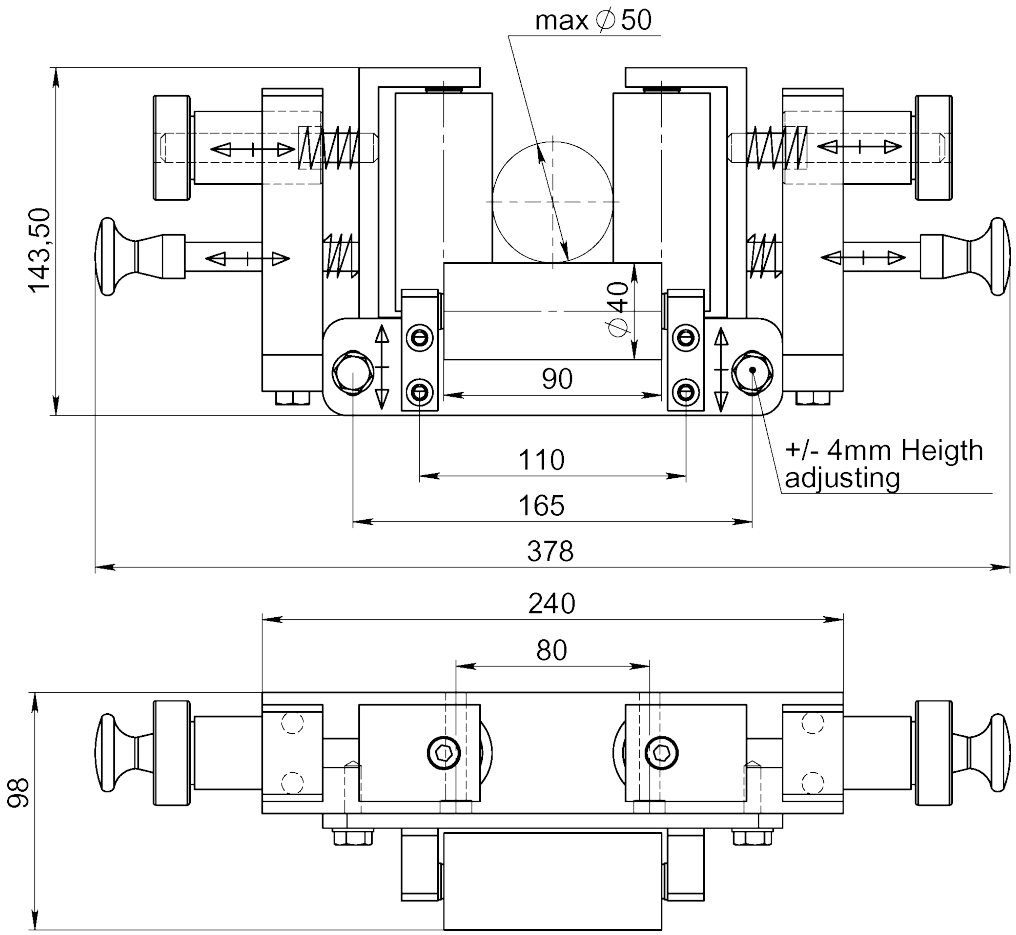

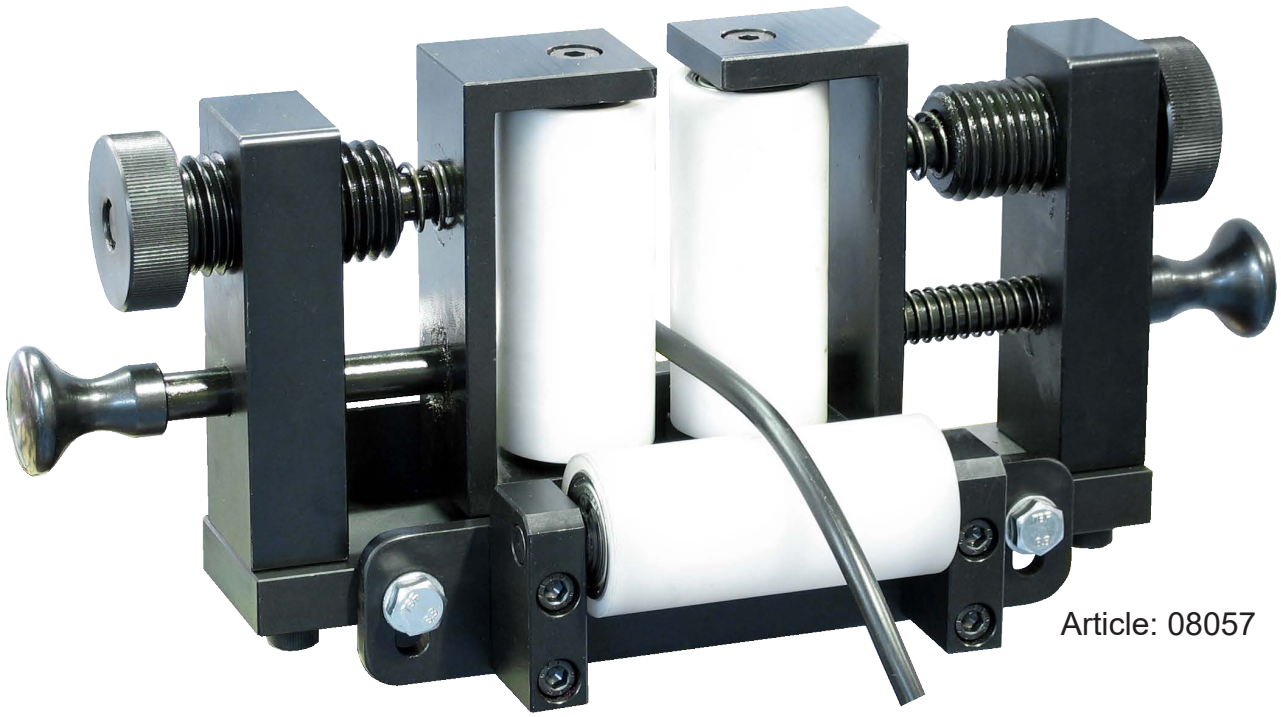

Article: 08057

Drawing No. 3-400968-00

Subec AB **Hesselmans Torg 5** **SE- 131 54 Nacka** **Sweden** **Phone: +46-8-88 46 33** **Email: info@subec.se** **Web: www.subec.se**

Copyright © 2026 Subec

ADJUSTABLE V-GUIDE SYSTEM

Max Product Ø: 50mm

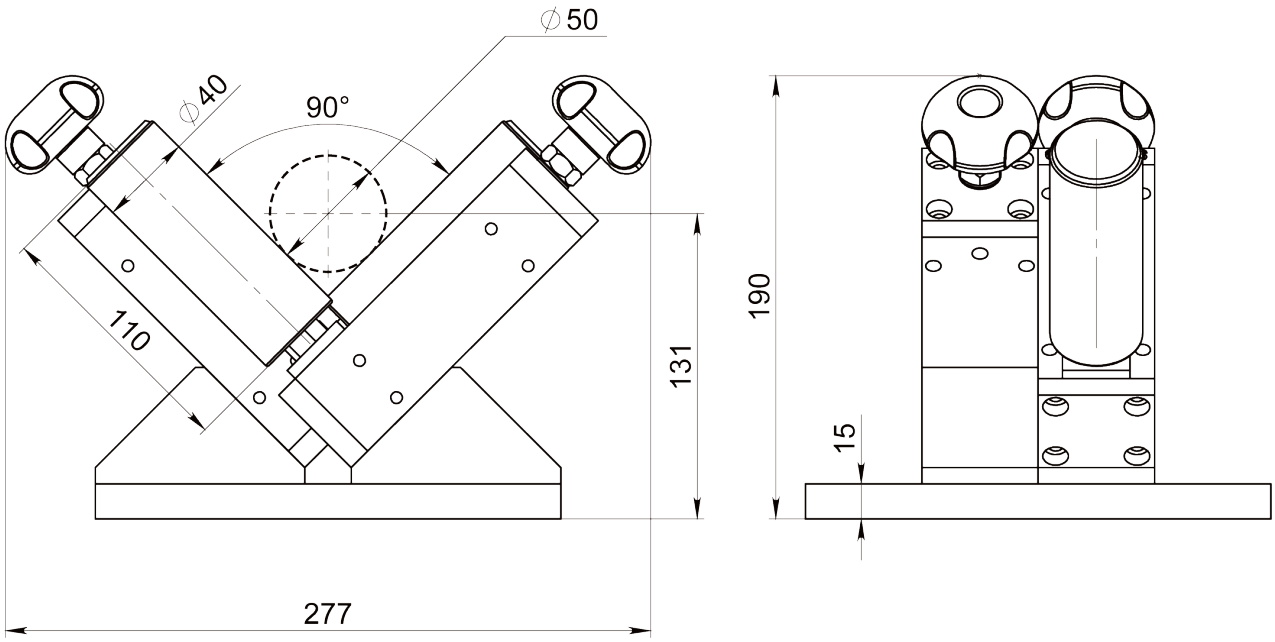

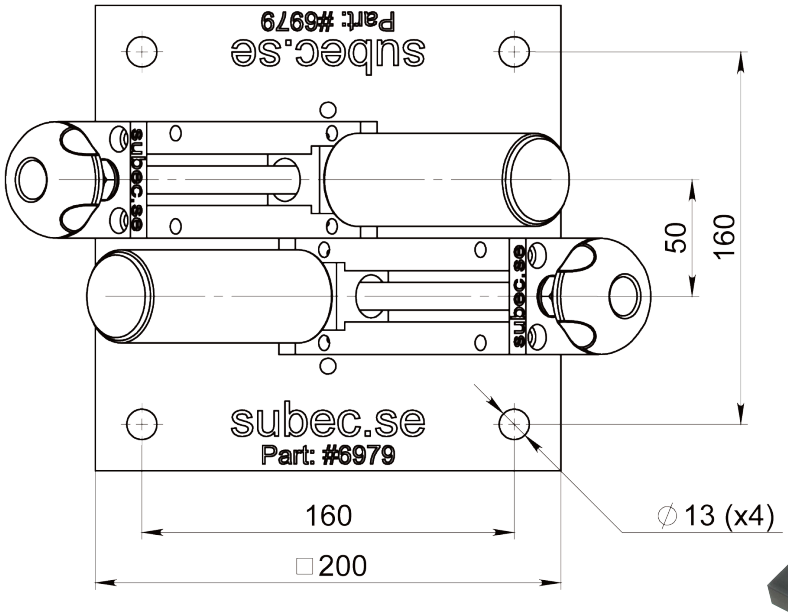

Article: 06979



The Rollers are in a 90° V-Formation. CL = (h1 + h2).
h2 = (Ød/2)/sin(45).

Drawing No. 3-400898-00

Subec AB **Hesselmans Torg 5** **SE- 131 54 Nacka** **Sweden** **Phone: +46-8-88 46 33** **Email: info@subec.se** **Web: www.subec.se**

Copyright © 2026 Subec

ROLLER GUIDE SYSTEM

Max Product Ø: 50mm

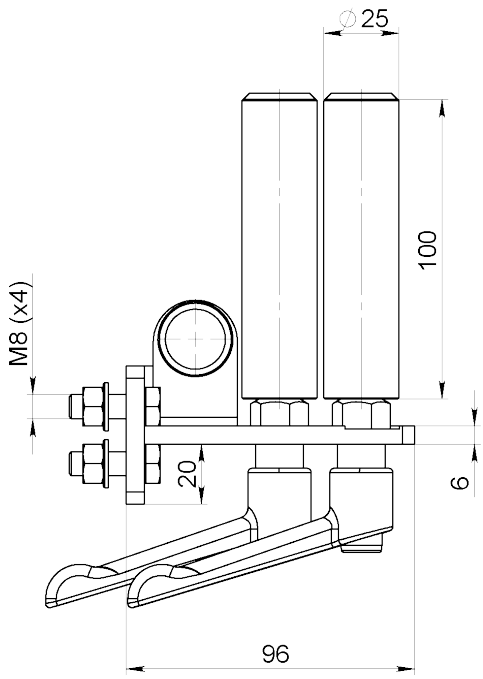

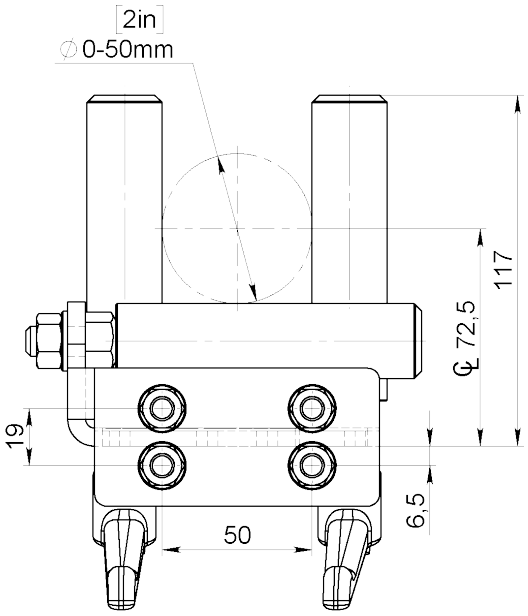

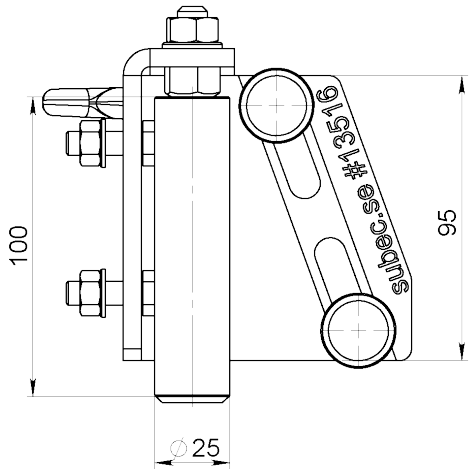

Info:
Vertical rollers positioned offset to allow certain lumps and splices to snake through.



Article: 13516*

Drawing No. 3-401359-00

* Stock item

Subec AB **Hesselmans Torg 5** **SE- 131 54 Nacka** **Sweden** **Phone: +46-8-88 46 33** **Email: info@subec.se** **Web: www.subec.se**

Copyright © 2026 Subec

ROLLER GUIDE SYSTEM

Max Product Ø: 60mm

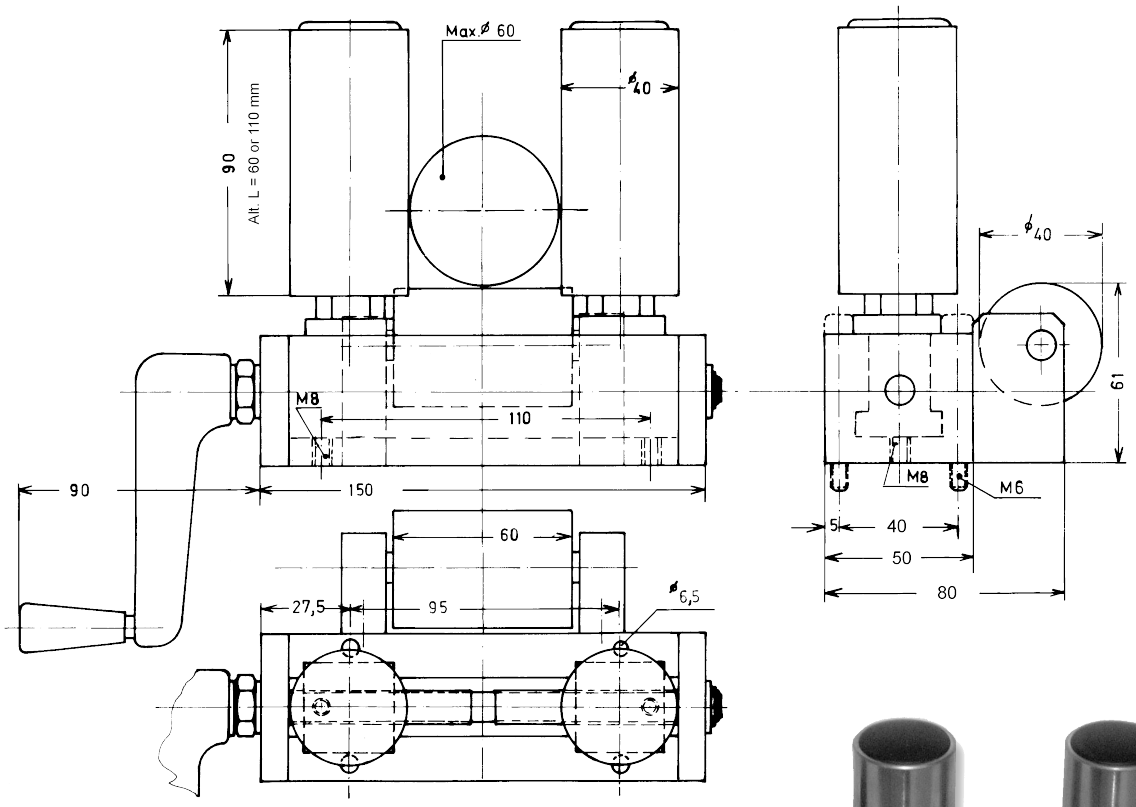

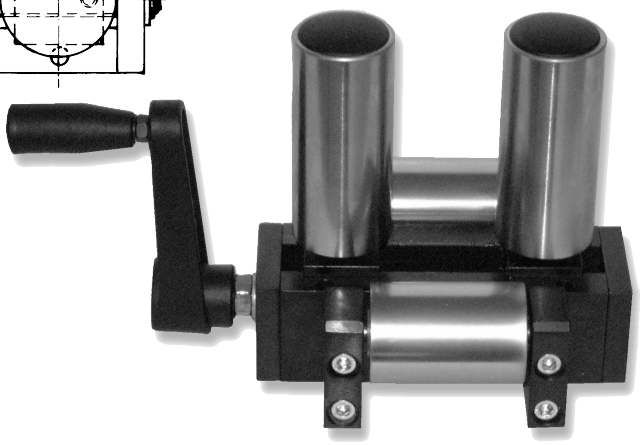

Execution with 2 horizontal rollers
Article: 01480
Weight: 6kg



Article: 00052*
Weight: 4kg

Drawing No. 3-400080-00

* Stock item

Subec AB **Hesselmans Torg 5** **SE- 131 54 Nacka** **Sweden** **Phone: +46-8-88 46 33** **Email: info@subec.se** **Web: www.subec.se**

Copyright © 2026 Subec

ROLLER GUIDE SYSTEM
SPRING LOADED

Max Product Ø: 40-110mm

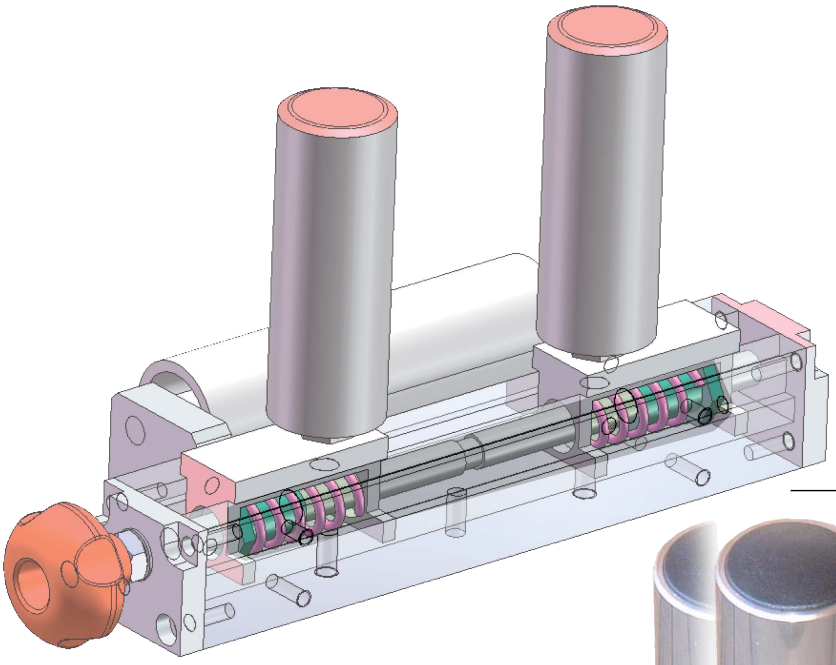

Outwards suspension
for lumps and knots

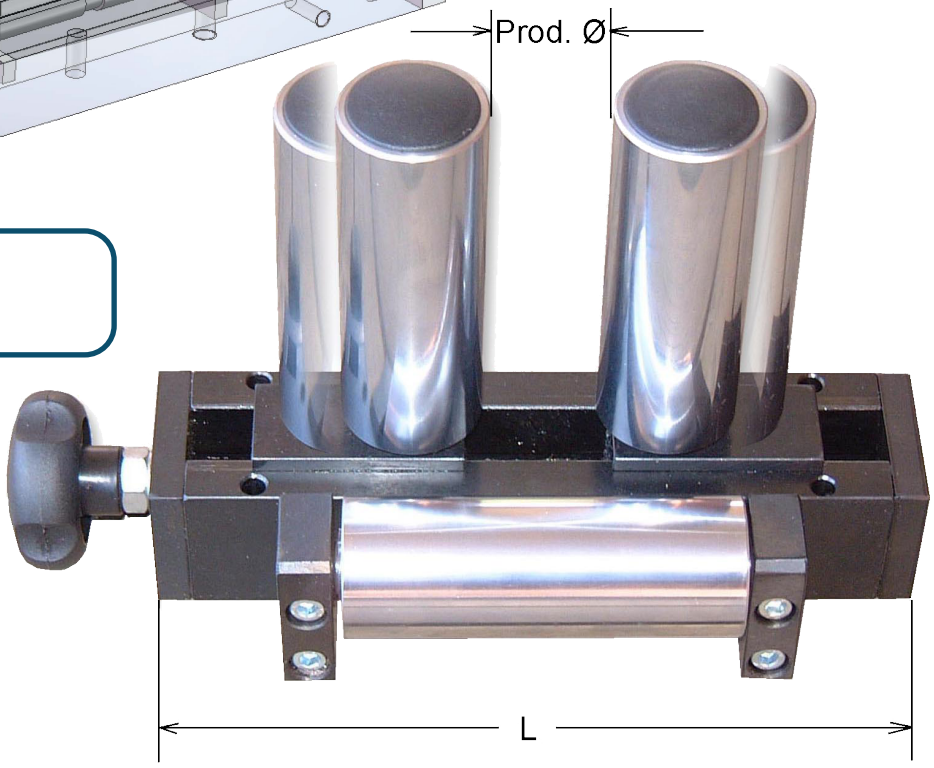

Info:
Spring force
(~44N STD)

Article	Prod. Ø	L	D	Hor. Roller ØxL	Vert. Roller ØxL
05031	0-50	220	40+20	40x110	40x110
01079	0-50	220	40+20	40x110	40x90
05771	0-60	220	50+20	40x110	30x60
03623	0-90	280	90+20	60x150	60x160
05772	0-110	280	110+20	40x150	40x60
05831	0-110	280	110+20	40x150	40x90
01275	0-110	280	110+20	40x150	40x110

Drawing No. 3-400440-00

Subec AB **Hesselmans Torg 5** **SE- 131 54 Nacka** **Sweden** **Phone: +46-8-88 46 33** **Email: info@subec.se** **Web: www.subec.se**

Copyright © 2026 Subec

ROLLER GUIDE SYSTEM

Max Product Ø: 70mm



Article: 05554
Weight: 18,4kg

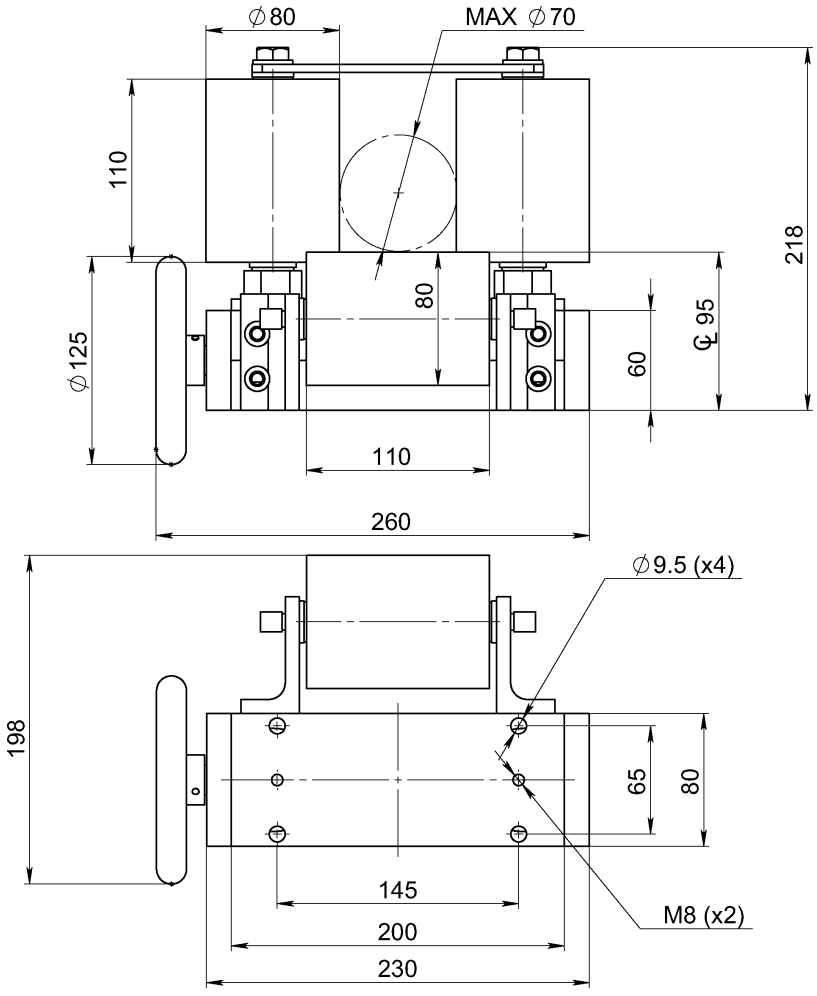

Drawing No. 3-300438-00

Subec AB **Hesselmans Torg 5** **SE- 131 54 Nacka** **Sweden** **Phone: +46-8-88 46 33** **Email: info@subec.se** **Web: www.subec.se**

Copyright © 2026 Subec

SECTOR GUIDE SYSTEM

Max Product Ø: 80mm

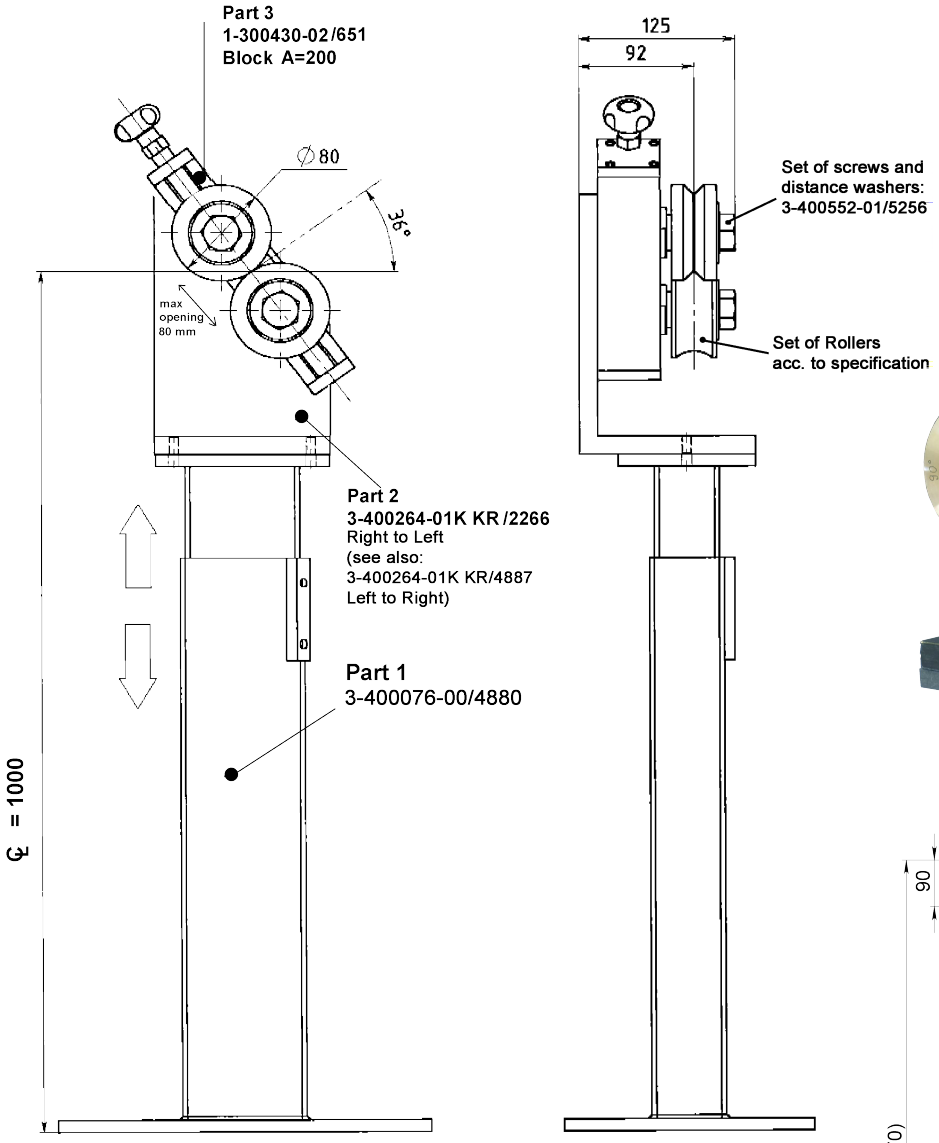

Article: 06032



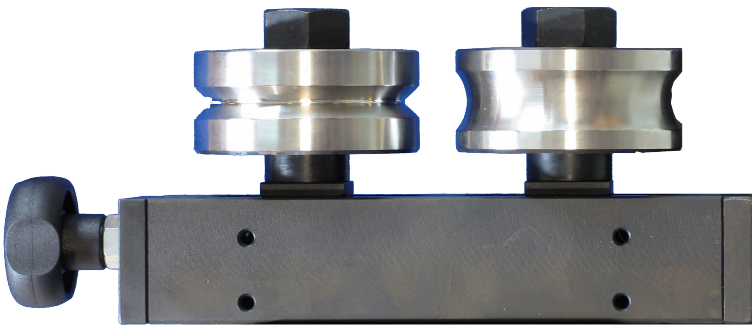

Article: 02175

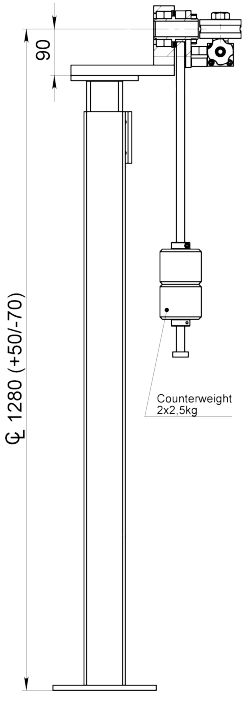

Rotating block with adjustable stand and counter weight
Article: 9313

Drawing No. 3-400552-01

Subec AB **Hesselmans Torg 5** **SE- 131 54 Nacka** **Sweden** **Phone: +46-8-88 46 33** **Email: info@subec.se** **Web: www.subec.se**

Copyright © 2026 Subec

ROLLER GUIDE SYSTEM

Max Product Ø: 80mm

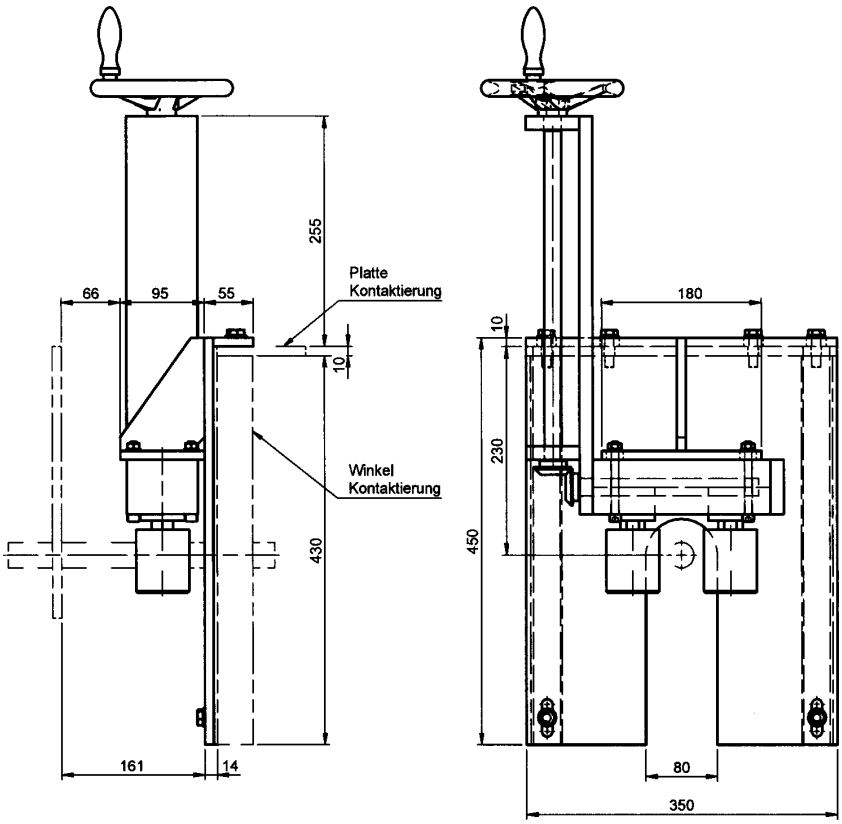

All Stainless,
Custom made for cooling trough

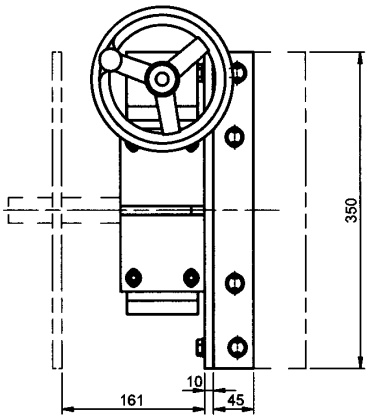

Article: 06667



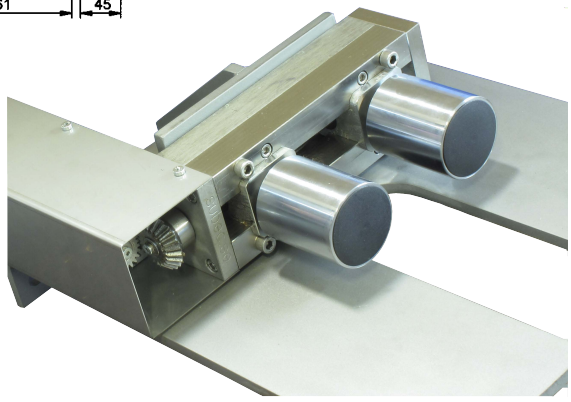

Drawing No. 3-400363-00

Subec AB **Hesselmans Torg 5** **SE- 131 54 Nacka** **Sweden** **Phone: +46-8-88 46 33** **Email: info@subec.se** **Web: www.subec.se**

Copyright © 2026 Subec

SECTOR GUIDE SYSTEM

Example of application

Article: 06032

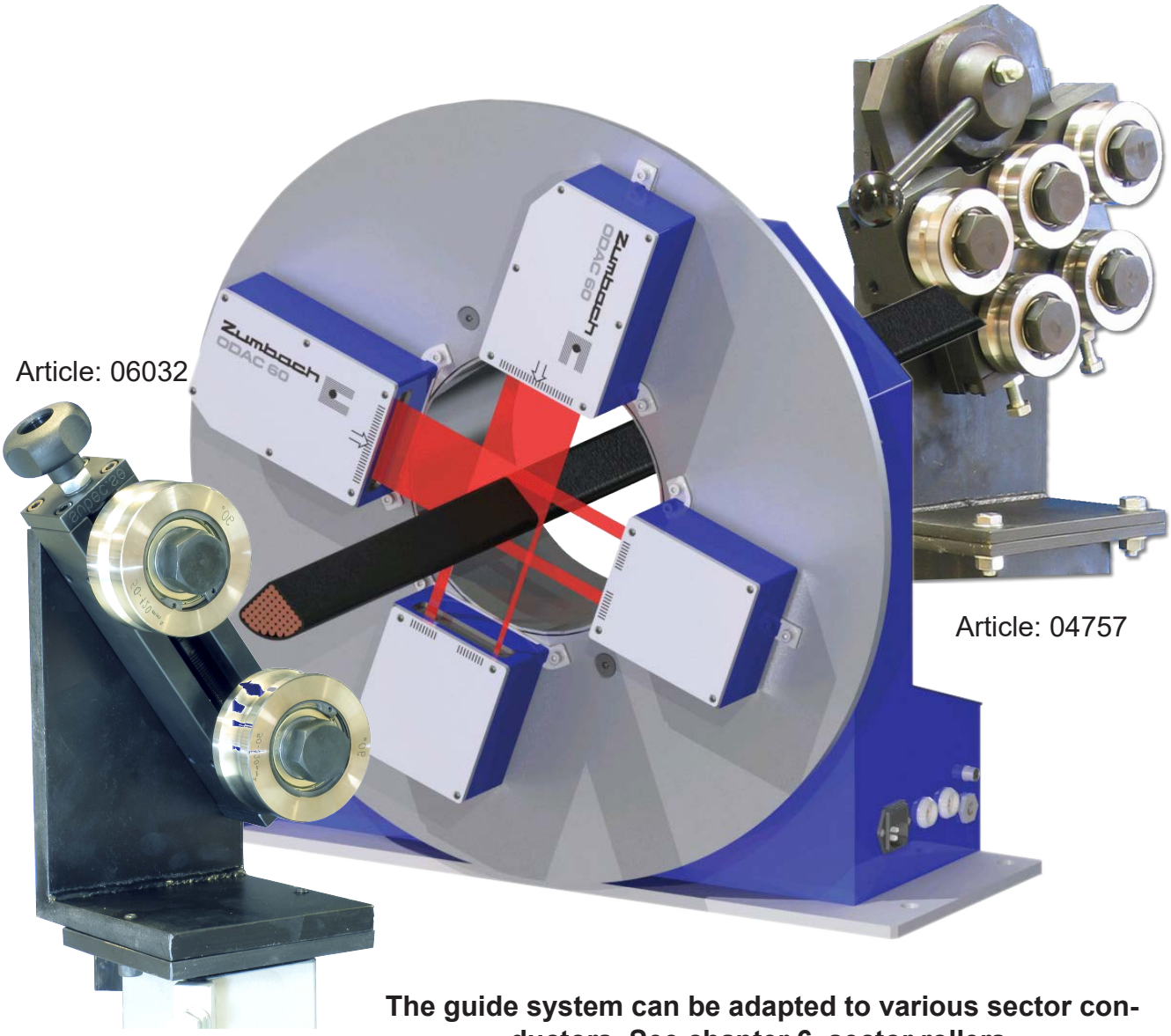

Article: 04757

The guide system can be adapted to various sector conductors. See chapter 6, sector rollers.

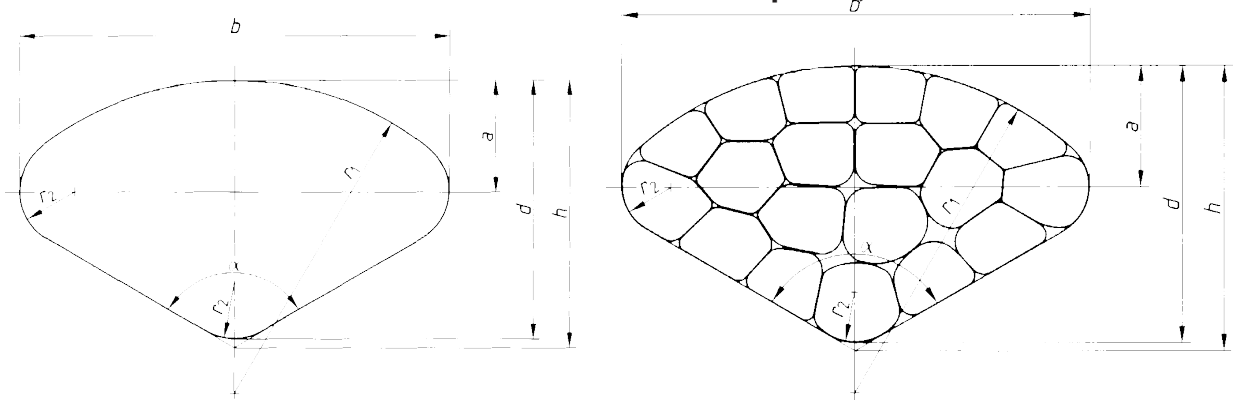

Subec AB **Hesselmans Torg 5** **SE- 131 54 Nacka** **Sweden** **Phone: +46-8-88 46 33** **Email: info@subec.se** **Web: www.subec.se**

Copyright © 2026 Subec

HEAVY DUTY ROLLER GUIDE SYSTEM

Product range: Ø 0-80mm

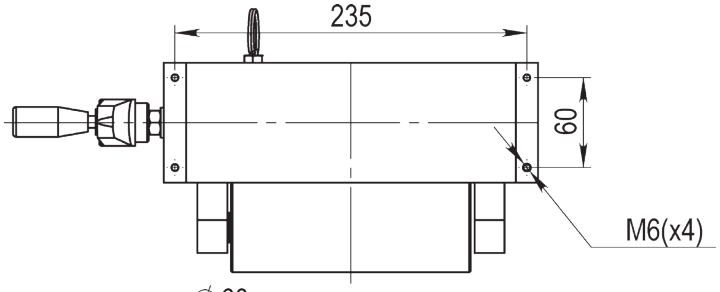

With one foldable vertical Roller

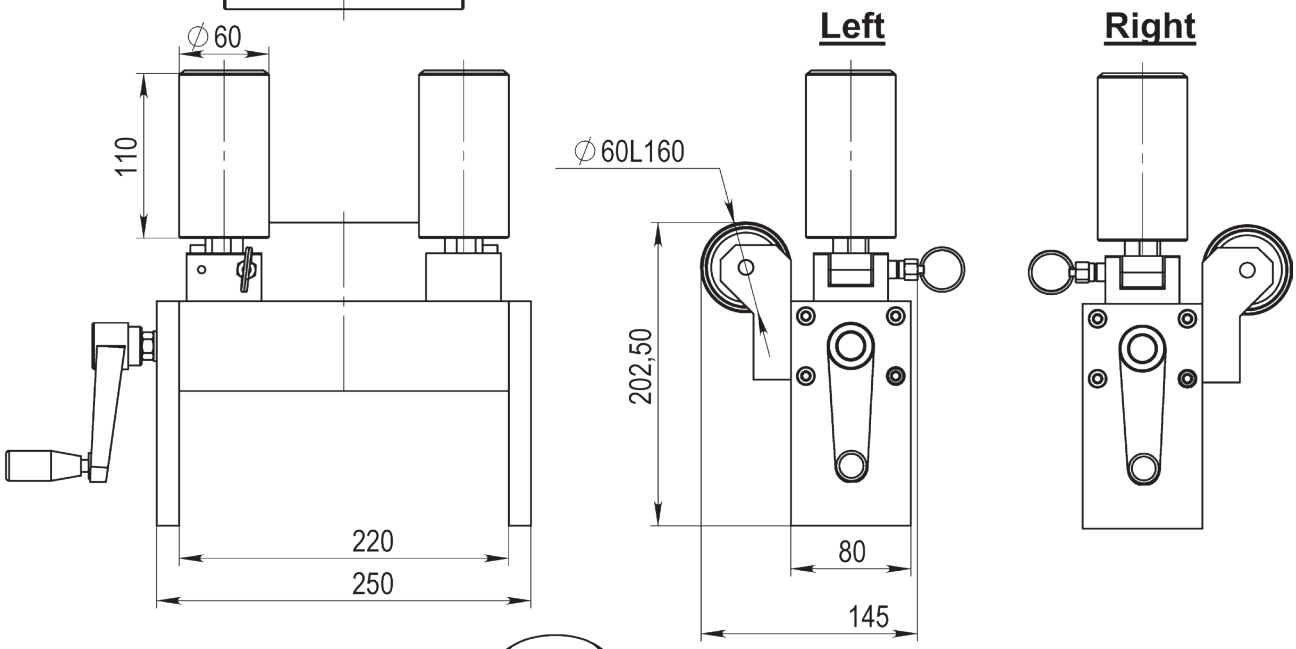

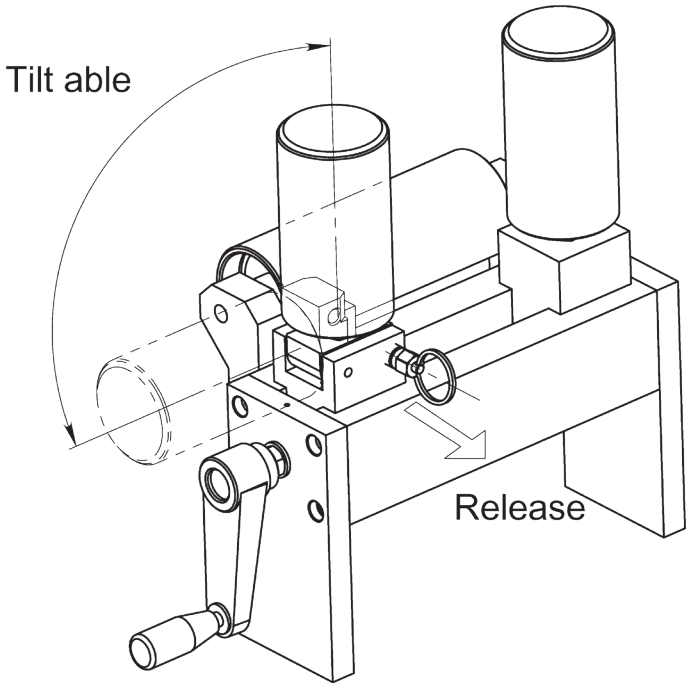

Article: 05025

Drawing No. 3-400481-02

Subec AB **Hesselmans Torg 5** **SE- 131 54 Nacka** **Sweden** **Phone: +46-8-88 46 33** **Email: info@subec.se** **Web: www.subec.se**

Copyright © 2026 Subec

ROLLER GUIDE SYSTEM

Product range: 80-165mm

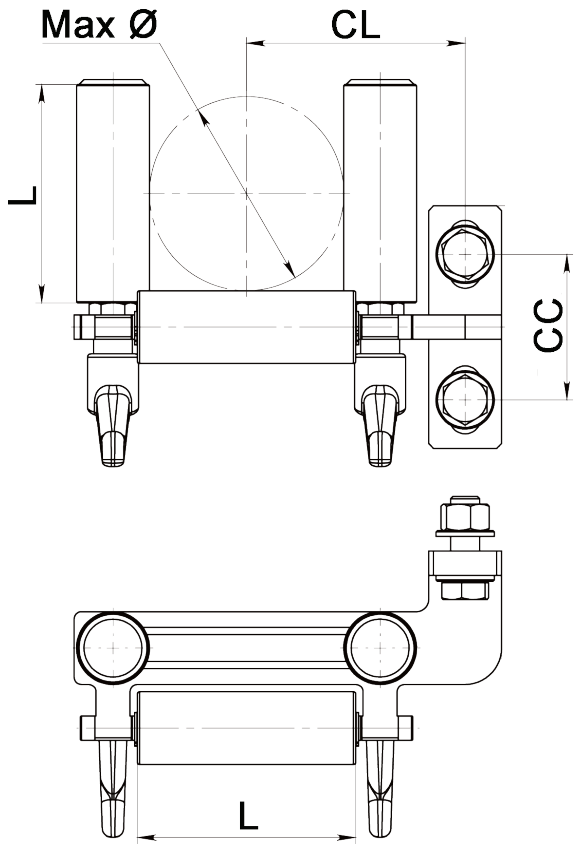

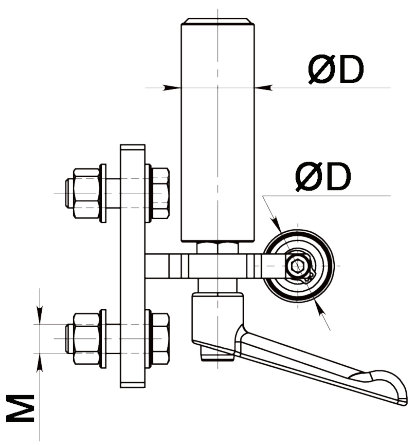



Article: 13938*
Weight: 7,5kg

Article	Max Ø	ØD	L	CL	CC	M	Orientation
14227	80	50	150	107,5	85	10	L-R
13938	80	50	150	107,5	85	10	R-L
13910	80	30	90	90	60	12	R-L
13911	100	40	110	120	70	16	R-L
13912*	165	60	200	187,5	100	20	R-L

Available in both Right-Left (R-L) and Left-Right (L-R) orientations.

Drawing No. 3-401382-00

* Stock item

Subec AB **Hesselmans Torg 5** **SE- 131 54 Nacka** **Sweden** **Phone: +46-8-88 46 33** **Email: info@subec.se** **Web: www.subec.se**

Copyright © 2026 Subec

ROLLER GUIDE SYSTEM

Max Product Ø: 90mm

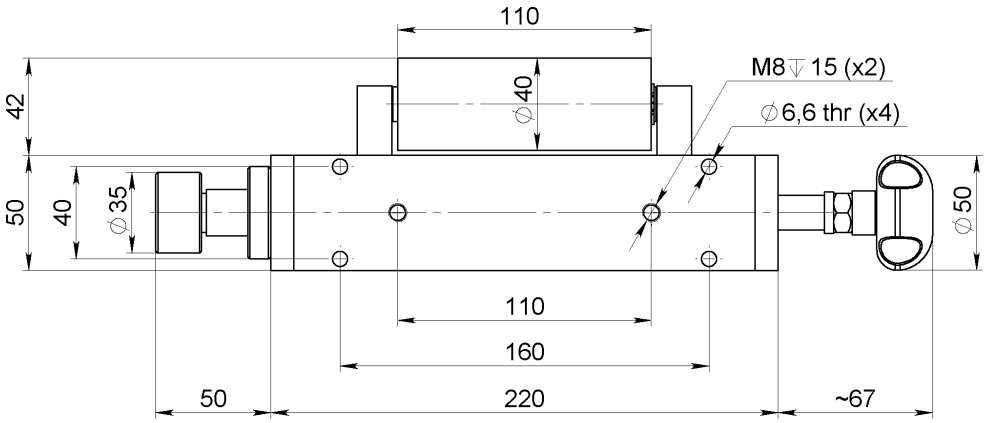

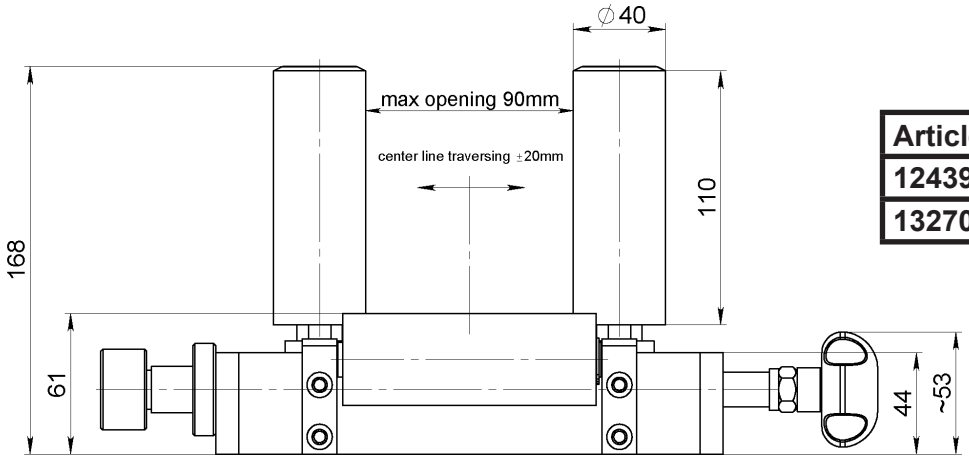

Article	Vert. Rollers
12439	L110
13270	L150

Info:
Center line adjustment of the vertical rollers

Article: 12439



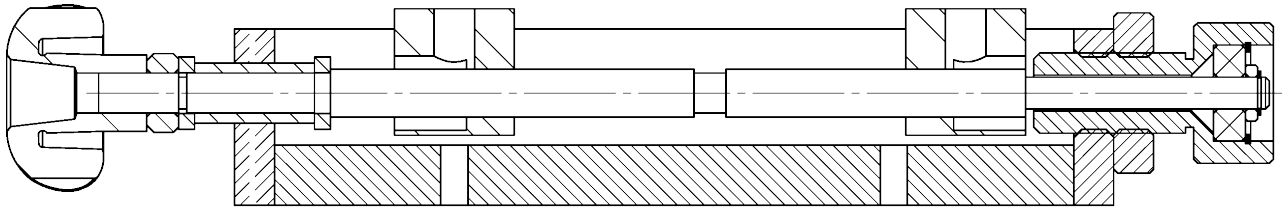

Block
Article: 8462

Drawing No. 3-400860-00

Subec AB **Hesselmans Torg 5** **SE- 131 54 Nacka** **Sweden** **Phone: +46-8-88 46 33** **Email: info@subec.se** **Web: www.subec.se**

Copyright © 2026 Subec

ROLLER GUIDE SYSTEM

Product range: Ø 0-100mm

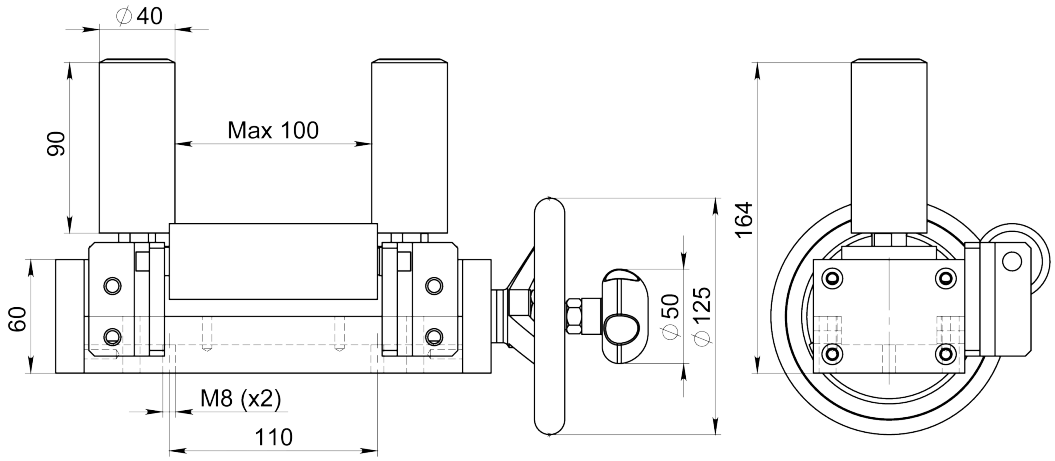

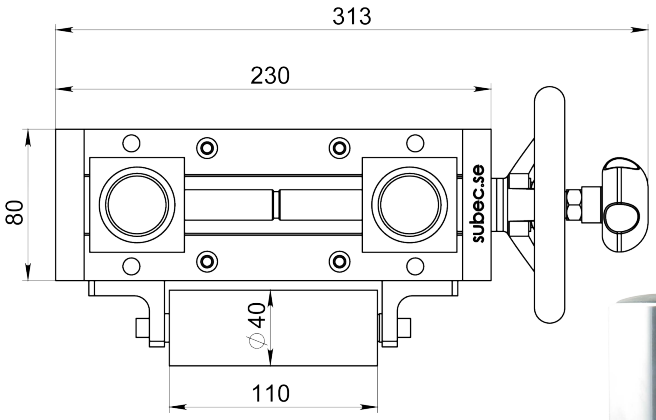

Individually adjustable rollers

Article: 11105

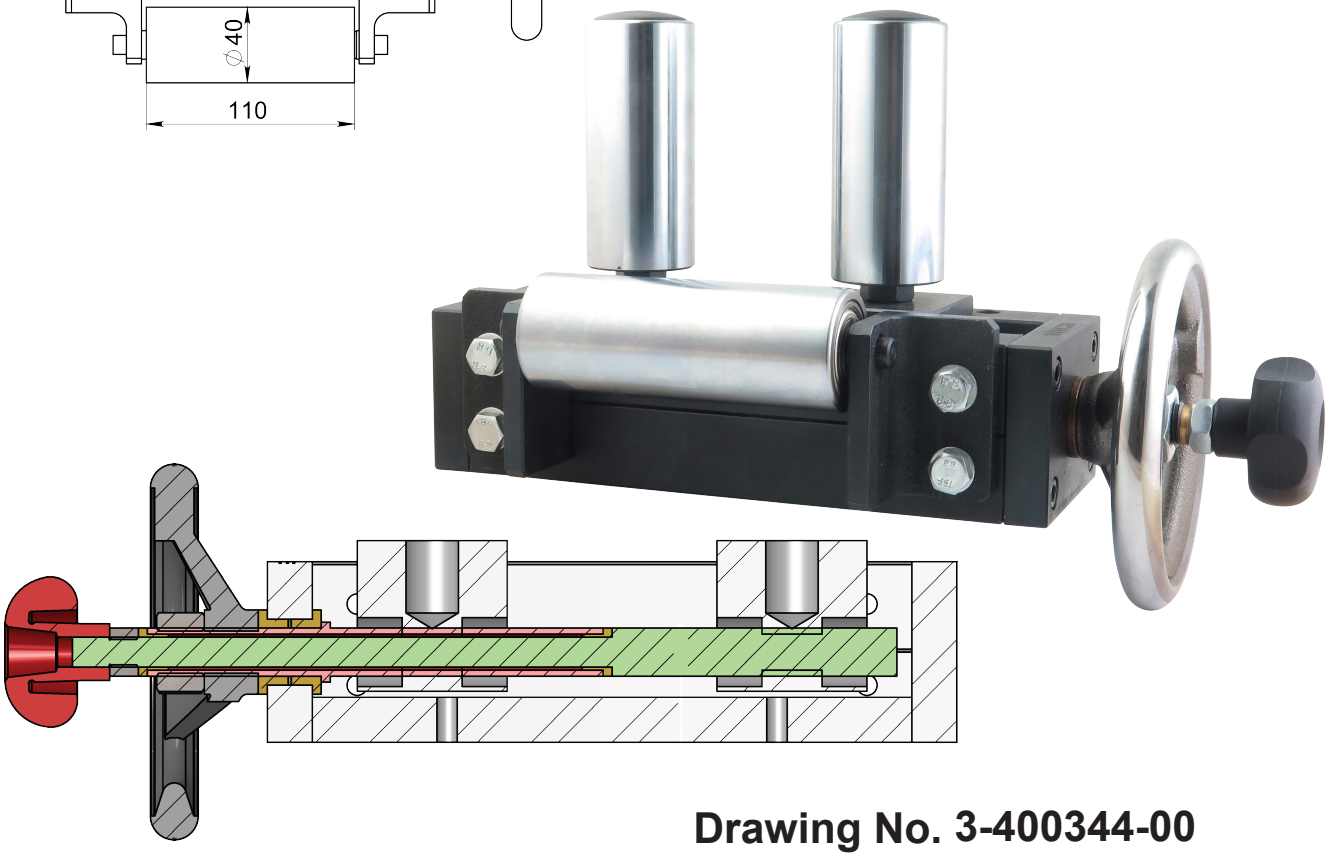

Drawing No. 3-400344-00

Subec AB **Hesselmans Torg 5** **SE- 131 54 Nacka** **Sweden** **Phone: +46-8-88 46 33** **Email: info@subec.se** **Web: www.subec.se**

Copyright © 2026 Subec

ROLLER GUIDE SYSTEM

Max Product Ø: 125mm

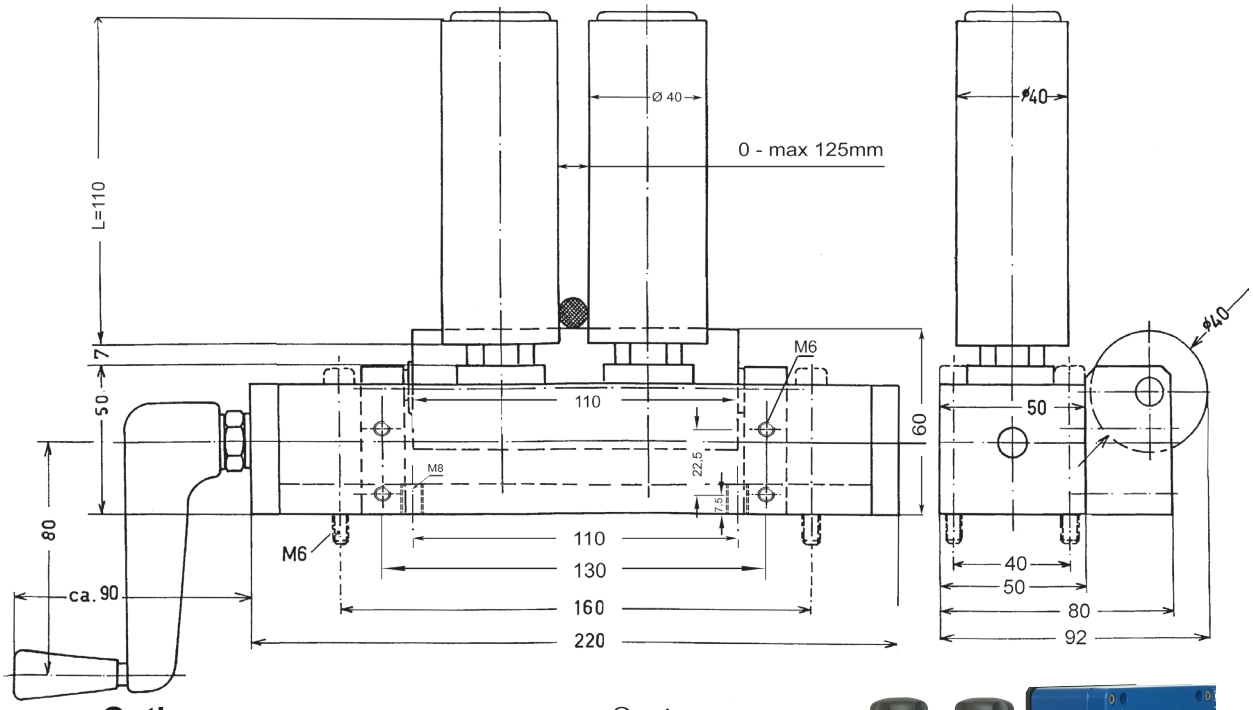

Option:
Individually Adjustable
Article: 05807*
Weight: 5,4kg



Option:
With a Vertical Roller
Article: 02765



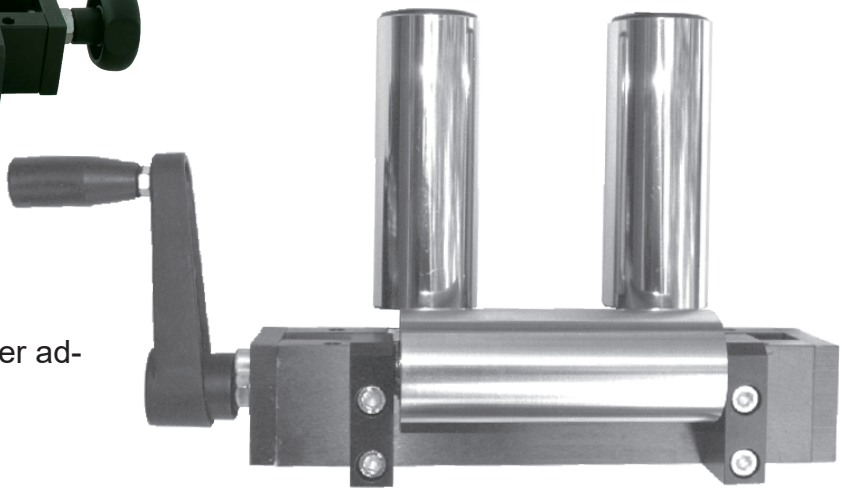

Option:
Crank for synchronized roller adjustment
Article: 01180*
Weight: 5,4kg

Drawing No. 3-300077-00

* Stock item

Subec AB **Hesselmans Torg 5** **SE- 131 54 Nacka** **Sweden** **Phone: +46-8-88 46 33** **Email: info@subec.se** **Web: www.subec.se**

Copyright © 2026 Subec

TRIANGULAR ROLLER GUIDE SYSTEM

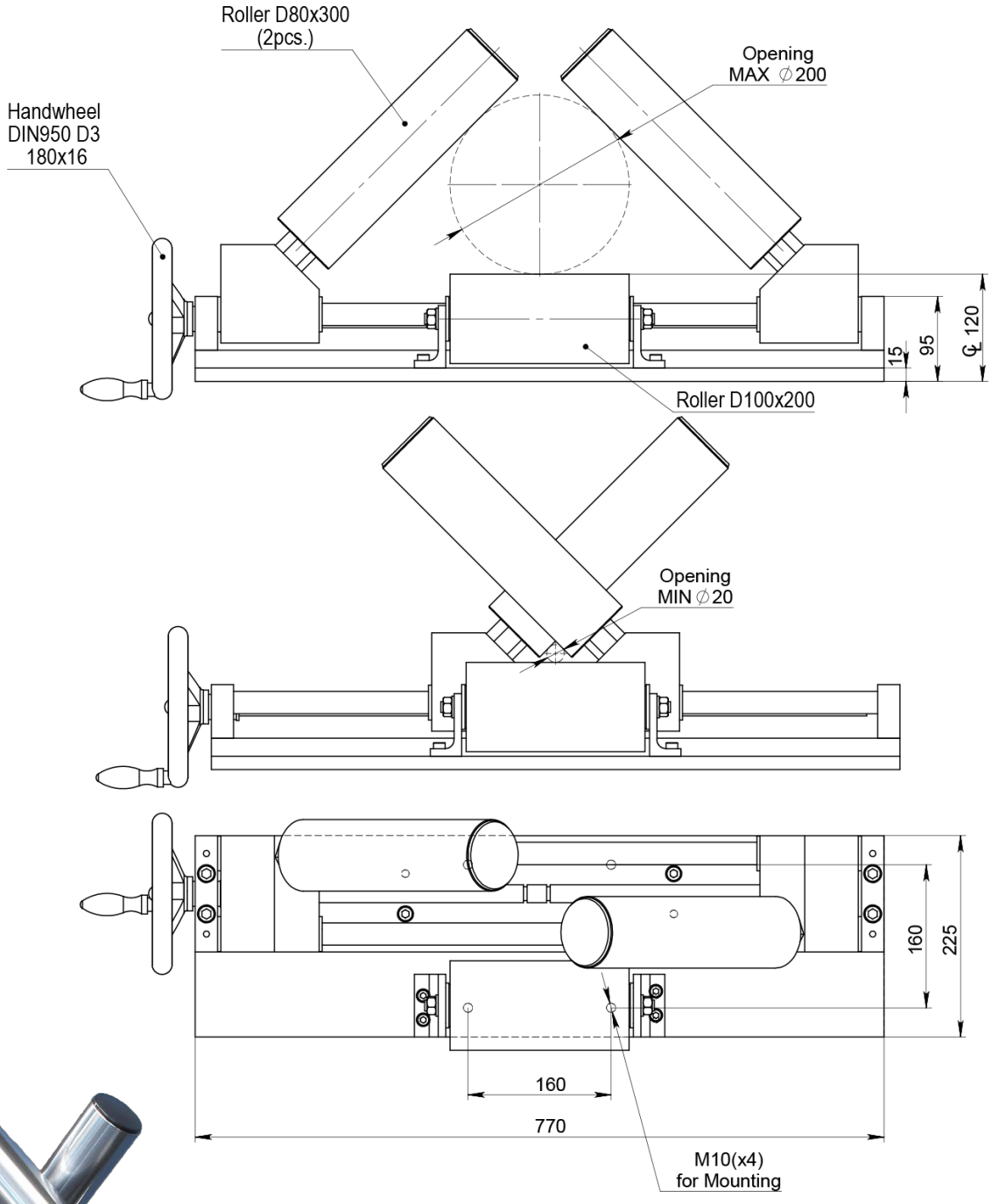

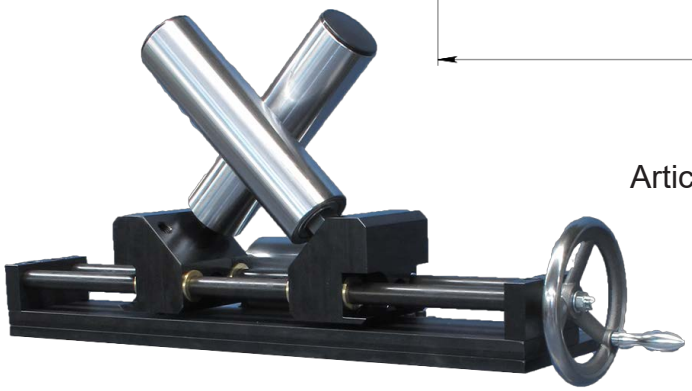

Article: 07574

Drawing No. 3-400937-00

Subec AB **Hesselmans Torg 5** **SE- 131 54 Nacka** **Sweden** **Phone: +46-8-88 46 33** **Email: info@subec.se** **Web: www.subec.se**

Copyright © 2026 Subec

HEAVY DUTY ROLLER GUIDE SYSTEM

Product range: 150-510mm

HW = Open/close by handwheel

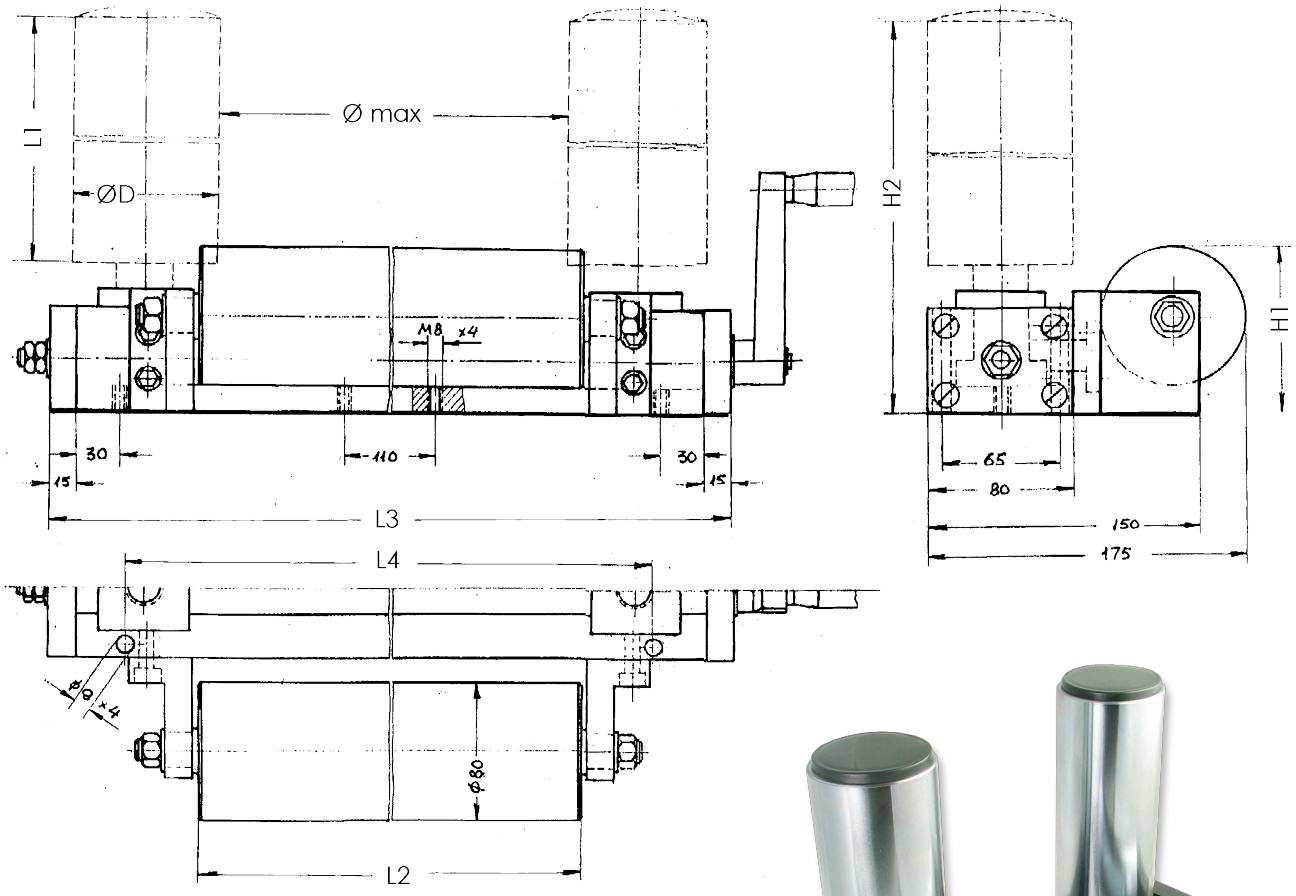



Article: 05266

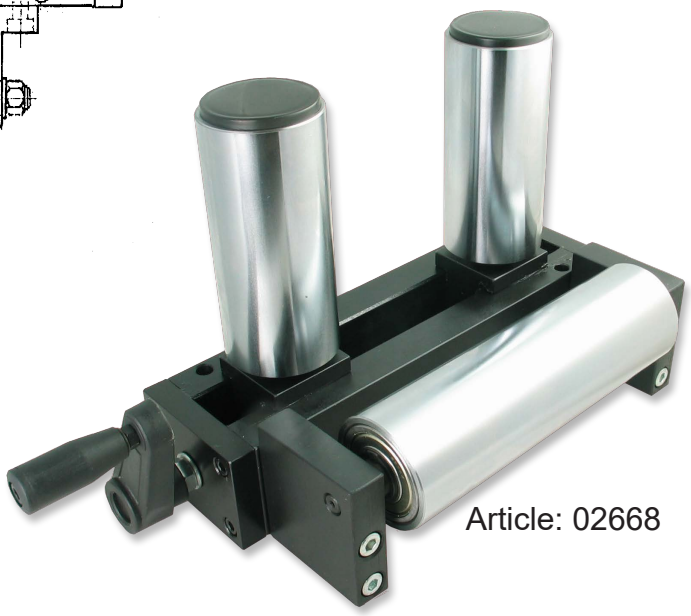

Article: 02668

Article	Ø max	ØD	L1	L2	L3	L4	H1	H2	Adj.
02668	150	60	130	200	300	220	90	207	Crank
12753	160	60	160	200	300	220	90	238	HW
05266	510	80	200	530	695	610	100	285	HW

Drawing No. 3-300438-00

Subec AB **Hesselmans Torg 5** **SE- 131 54 Nacka** **Sweden** **Phone: +46-8-88 46 33** **Email: info@subec.se** **Web: www.subec.se**

Copyright © 2026 Subec

HEAVY DUTY ROLLER GUIDE SYSTEM

Product range: 150-208mm
Traversing sideways ±30mm

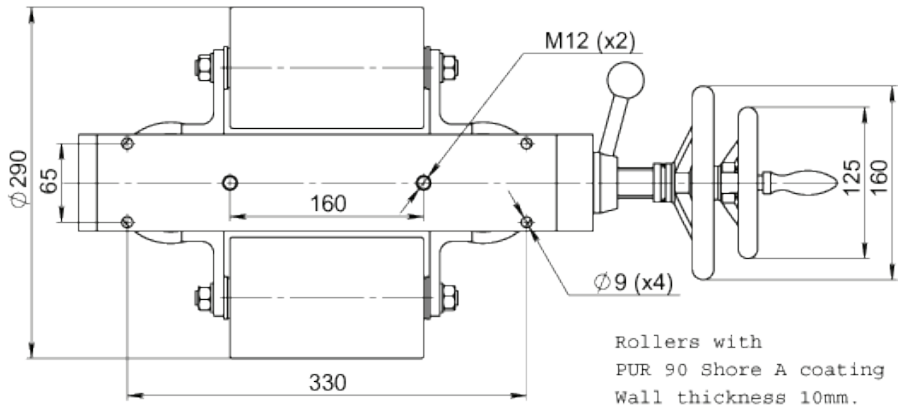

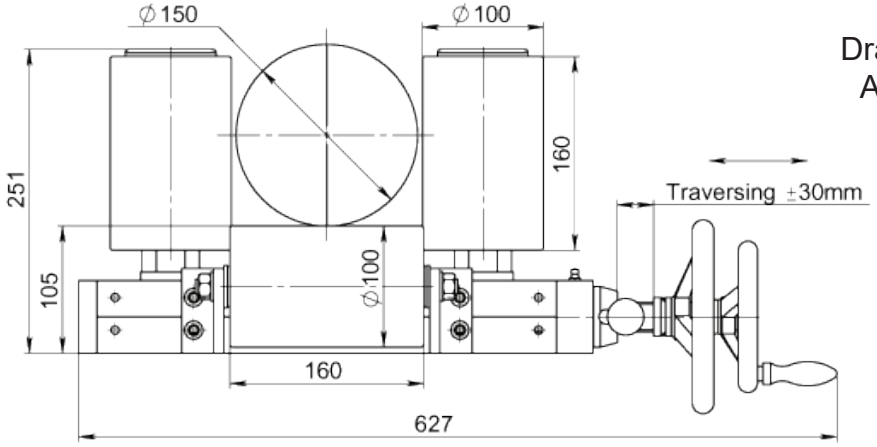

Drawing shows
Article: 7841

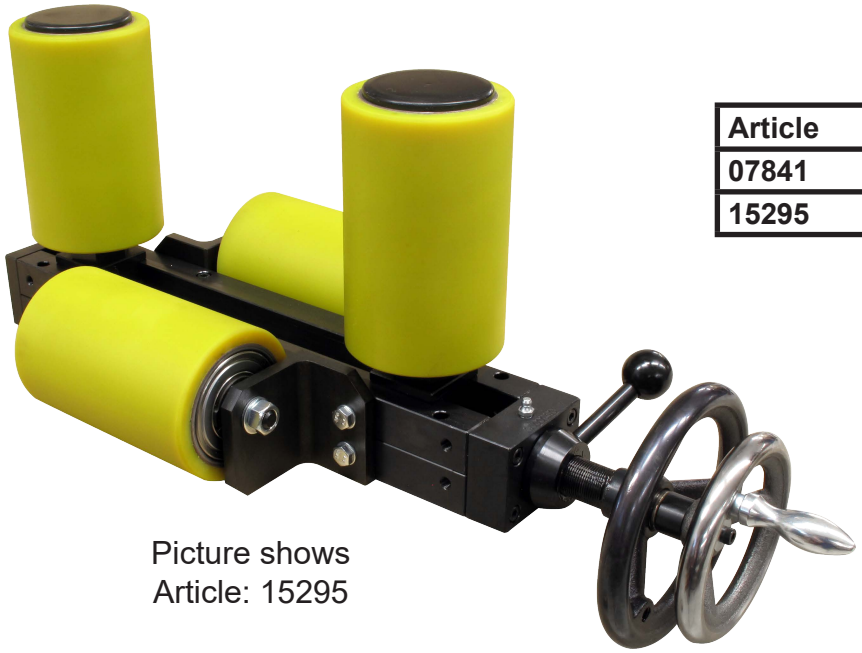

Picture shows
Article: 15295

Article	Max Opening
07841	150
15295	208

Drawing No. 3-400344-00

Subec AB **Hesselmans Torg 5** **SE- 131 54 Nacka** **Sweden** **Phone: +46-8-88 46 33** **Email: info@subec.se** **Web: www.subec.se**

Copyright © 2026 Subec

HEAVY DUTY ROLLER GUIDE SYSTEM

Product range: 0-180mm

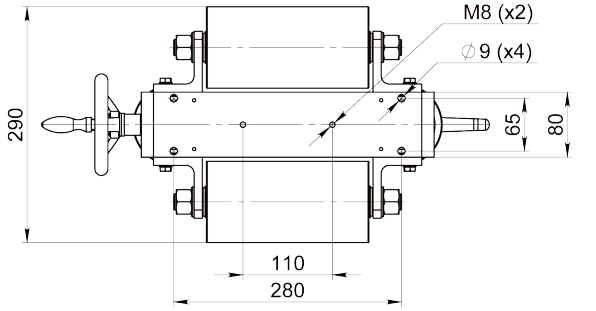

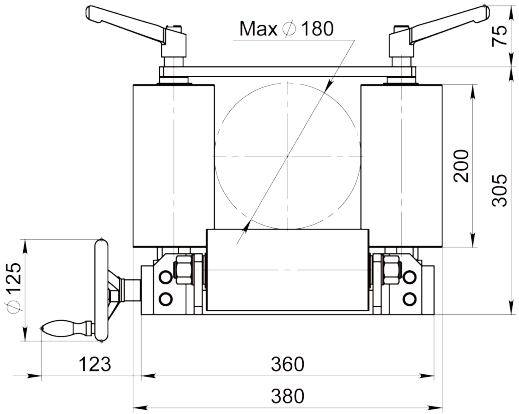

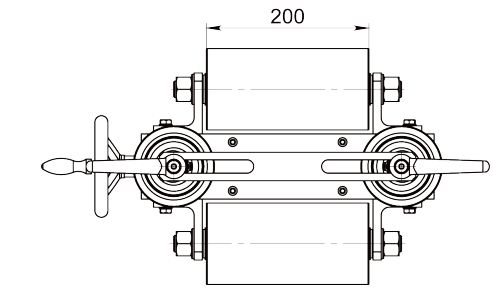

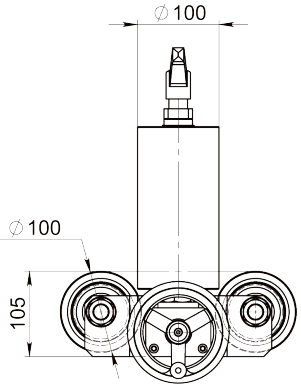



Article: 15114
Weight: 29,3kg
With POM Rollers

Article: 11598
Weight: 30kg
With polyurethane rollers shore 80A



Drawing No. 3-300438-00

Subec AB **Hesselmans Torg 5** **SE- 131 54 Nacka** **Sweden** **Phone: +46-8-88 46 33** **Email: info@subec.se** **Web: www.subec.se**

Copyright © 2026 Subec

ROLLER GUIDE SYSTEM FOR COOLING TROUGHS

Standard with POM Rollers

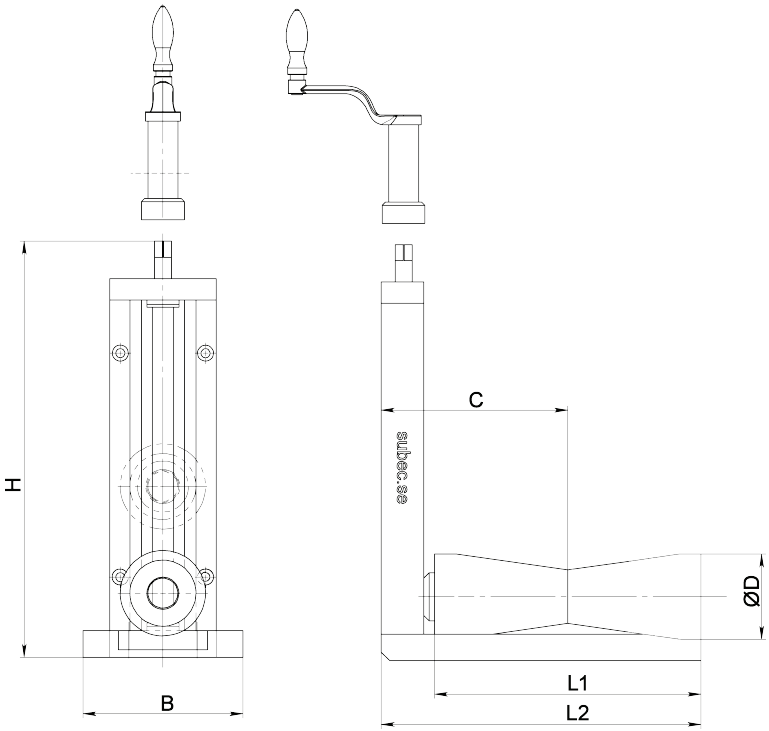

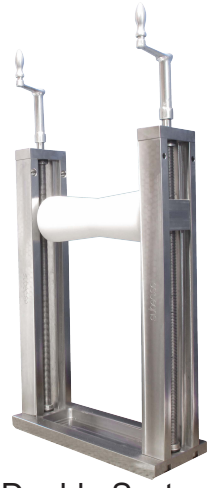

Double System
Article: 7768



Article: 07224
Weight: 13,5kg

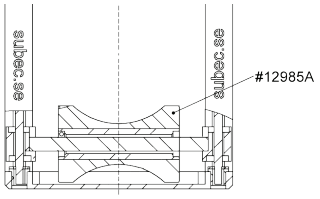

Option:
Radius groove



Stainless Roller
Article: 13044

Article	ØD	L1	L2	C	B	H	Note
12839	20	60	90	50	40	140	Handwheel
13044	50	88	130	85	60	222	Stainless Roller and Crank
12669	80	180	-	132,5	100	382	Crank and no base plate
14124	80	180	240	132,5	150	275	Crank
07224	80	180	250	132,5	150	387	Crank
12320	80	235	330	165	146	387	Double System with Crank
08552	80	250	300	175	150	390	With crank and bearing
08651	80	300	390	200	150	437	With crank and scale
07778	90	240	350	175	150	385	Crank
07768	90	240	350	175	150	595	Double System with Crank

Drawing No. 3-400924-00

Subec AB **Hesselmans Torg 5** **SE- 131 54 Nacka** **Sweden** **Phone: +46-8-88 46 33** **Email: info@subec.se** **Web: www.subec.se**

Copyright © 2026 Subec

ROLLER ASSEMBLY FOR COOLING TROUGH

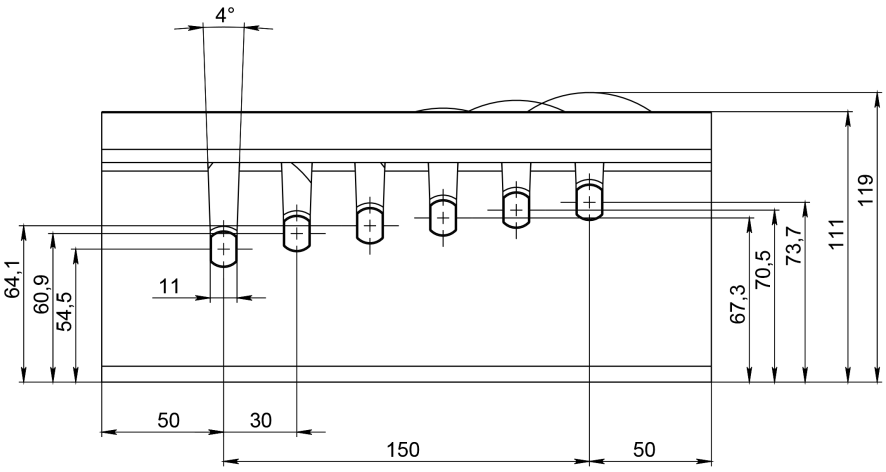

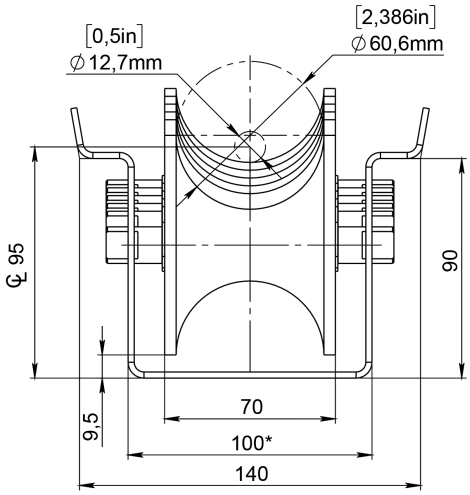

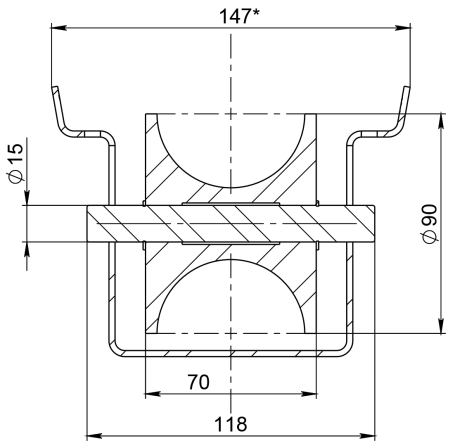

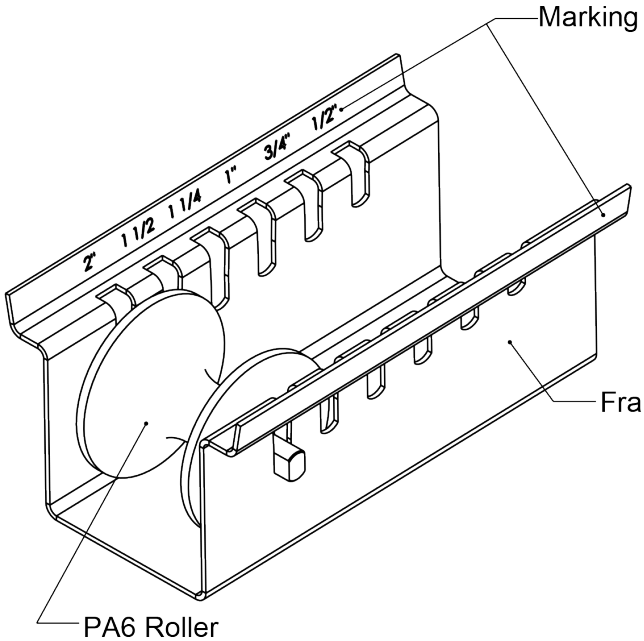

Article: 18653

Drawing No. 3-401487-00

Subec AB **Hesselmans Torg 5** **SE- 131 54 Nacka** **Sweden** **Phone: +46-8-88 46 33** **Email: info@subec.se** **Web: www.subec.se**

Copyright © 2026 Subec

ROLLER GUIDE SYSTEM

Max Product Ø: 170mm

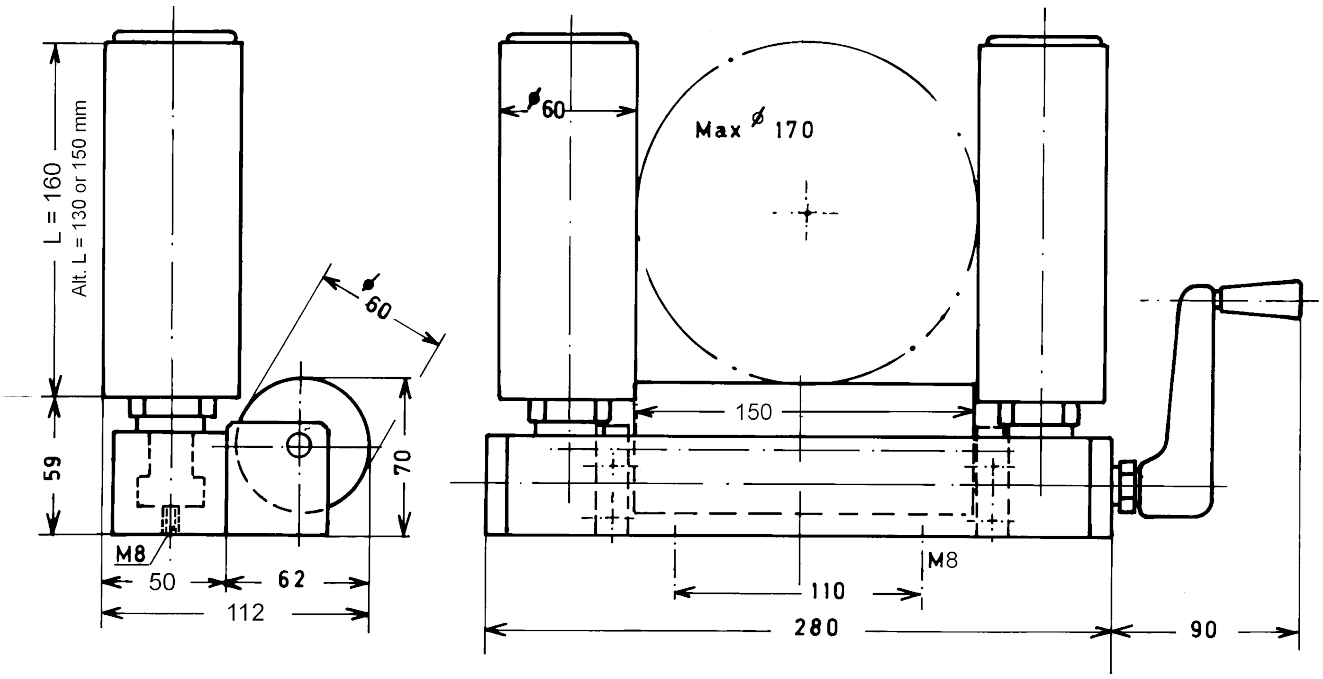

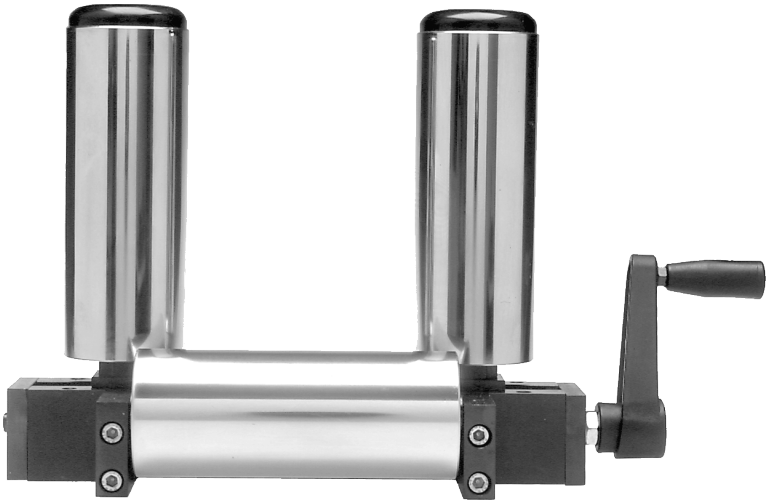

Article	Vert. Roller
03186	Ø60 L110
06302	Ø60 L130
00154	Ø60 L160
05340	Ø60 L200

Option:
With PUR V-Rollers
Article: 01188



Option:
With sector Rollers
Article 01134

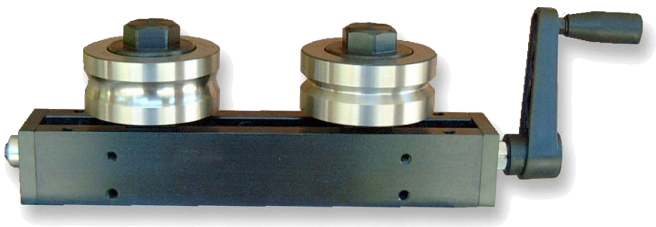

Drawing No. 3-400264-00

Subec AB **Hesselmans Torg 5** **SE- 131 54 Nacka** **Sweden** **Phone: +46-8-88 46 33** **Email: info@subec.se** **Web: www.subec.se**

Copyright © 2026 Subec

HEAVY DUTY ROLLER GUIDE SYSTEM

Max Product Ø: 175mm

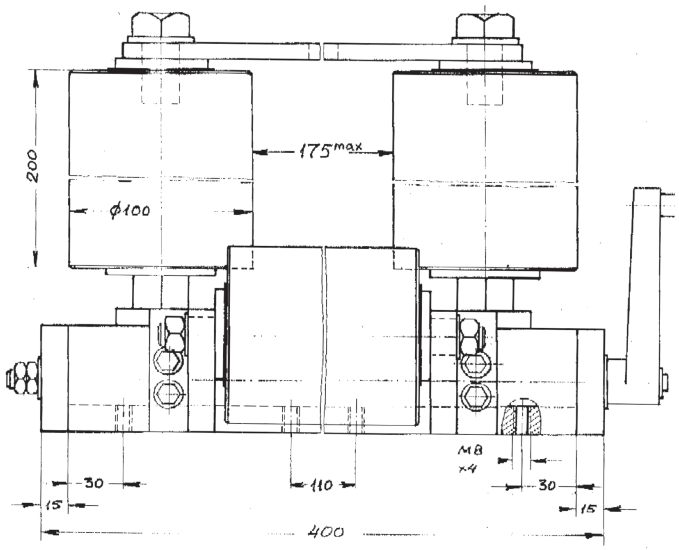

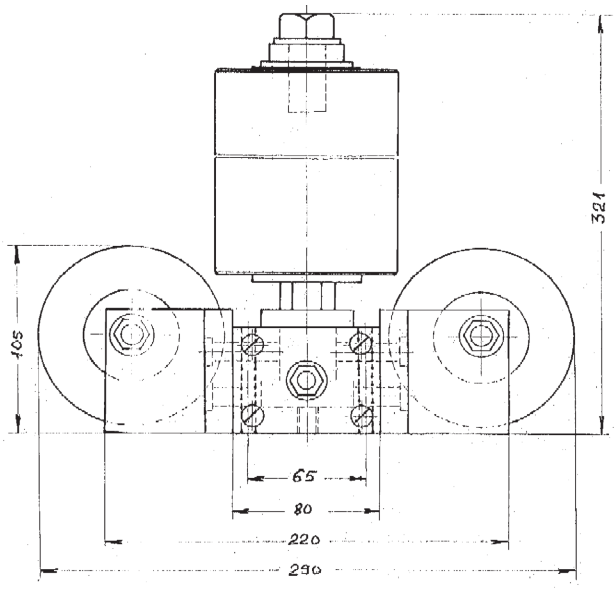

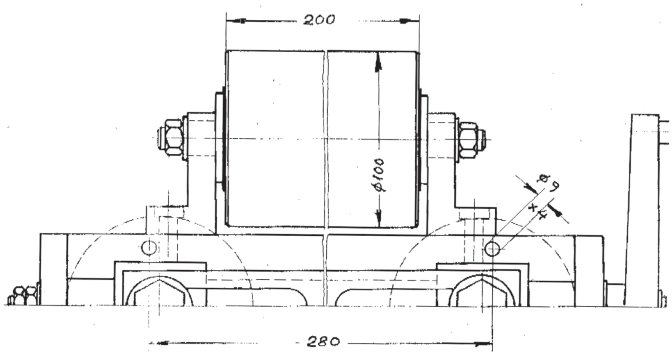

Option:
With Stand and PA6-Rollers
Article: 05041



Article: 00061
Weight: 49kg

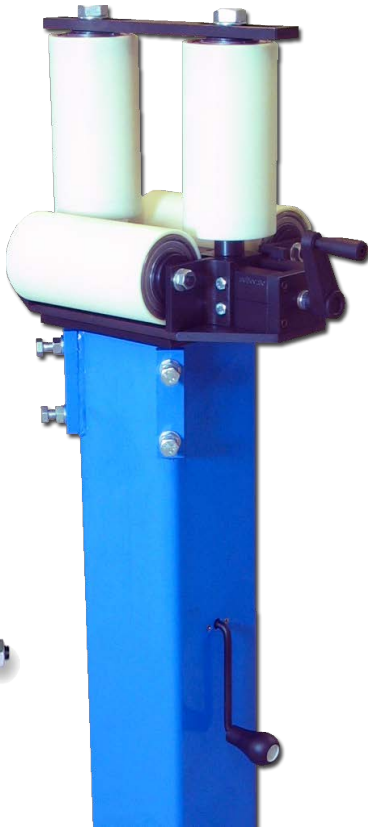

Drawing No. 3-400438-00

Subec AB **Hesselmans Torg 5** **SE- 131 54 Nacka** **Sweden** **Phone: +46-8-88 46 33** **Email: info@subec.se** **Web: www.subec.se**

Copyright © 2026 Subec

ROLLER GUIDE SYSTEM

Product range: 180-600mm

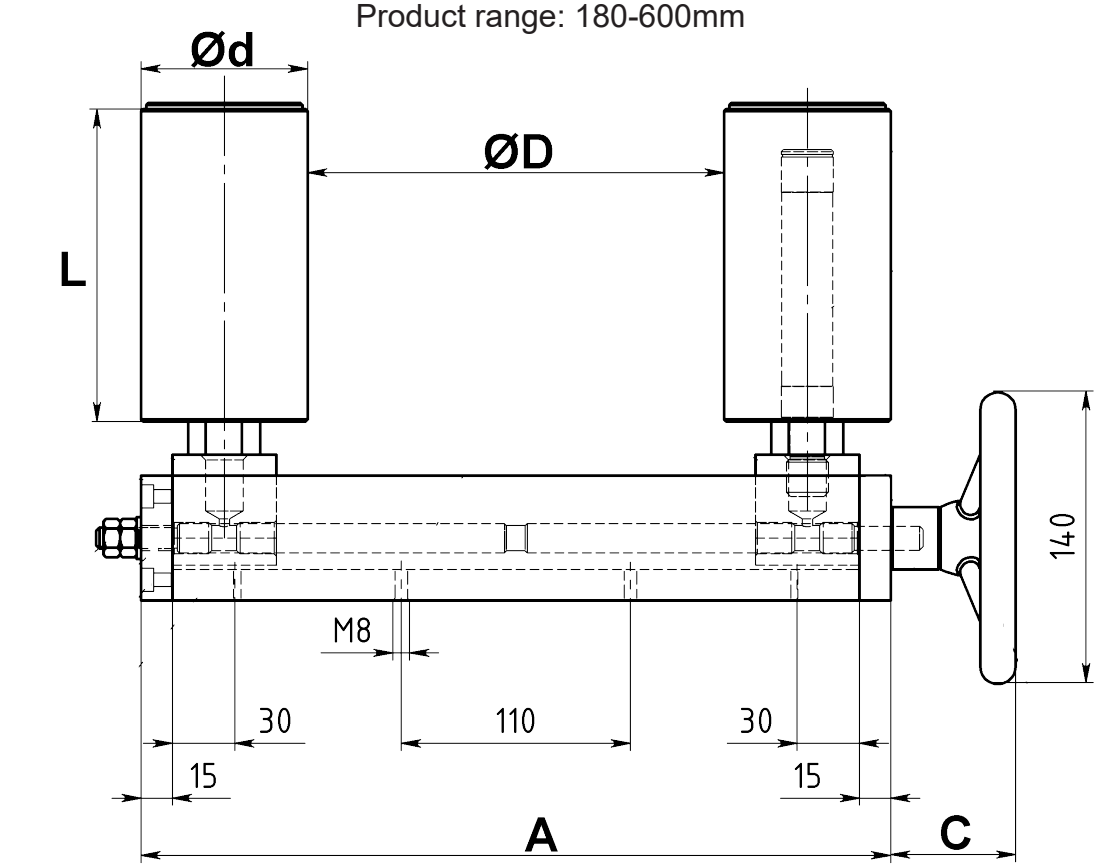

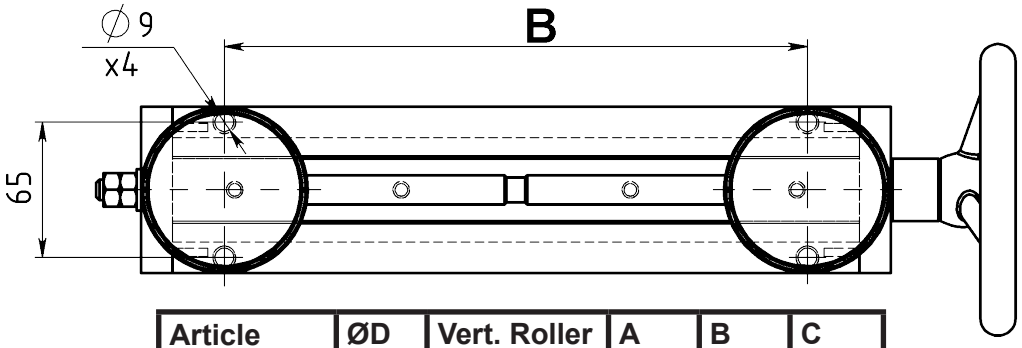

Article	ØD	Vert. Roller	A	B	C
11831	120	Ø100 L150	350	220	60
03806	180	Ø100 L150	360	280	
01856	200	Ø80 L150	360	280	
02518	220	Ø60 L160	360	280	
05130	270	Ø100 L270	450	370	
02515	300	Ø60 L160	470	390	
05188	310	Ø80 L300	470	390	60
02497	400	Ø60 L160	570	490	
01853	600	Ø80 L150	770	640	265

Drawing No. 3-400363-00

Subec AB **Hesselmans Torg 5** **SE- 131 54 Nacka** **Sweden** **Phone: +46-8-88 46 33** **Email: info@subec.se** **Web: www.subec.se**

Copyright © 2026 Subec

ROLLER GUIDE SYSTEM

Max Product Ø: 285mm

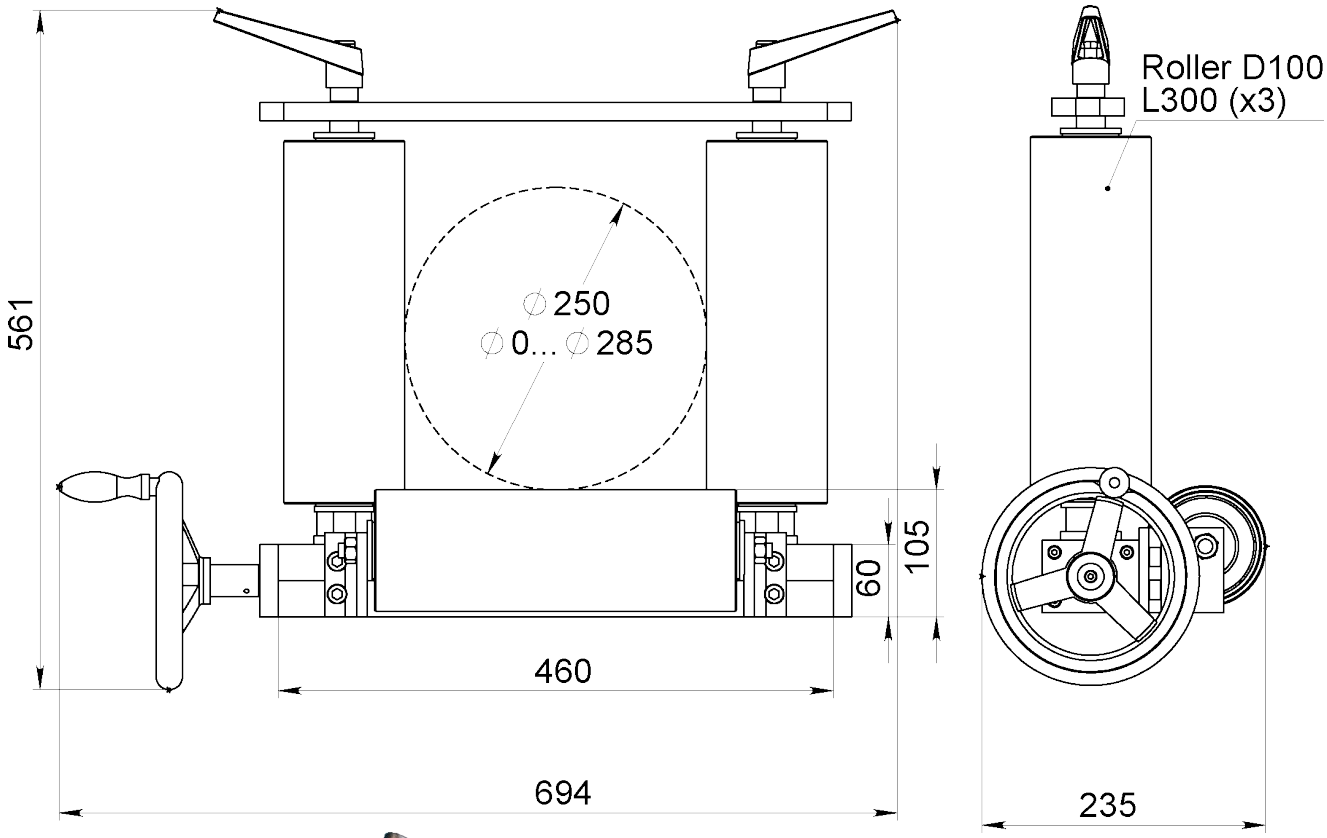



Article: 07720

Drawing No. 3-300438-00

Subec AB **Hesselmans Torg 5** **SE- 131 54 Nacka** **Sweden** **Phone: +46-8-88 46 33** **Email: info@subec.se** **Web: www.subec.se**

Copyright © 2026 Subec

ROLLER GUIDE SYSTEM

Max Product Ø: 310mm

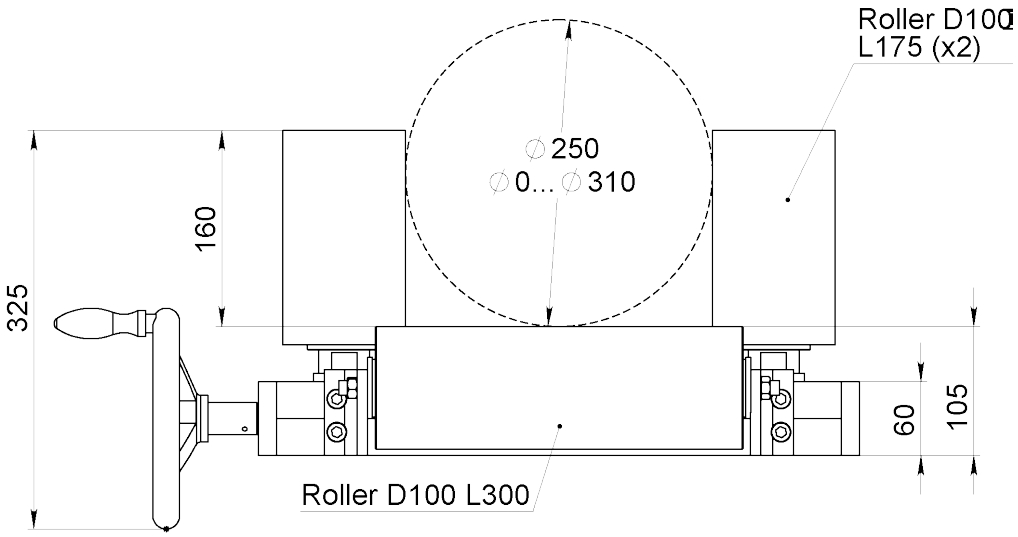

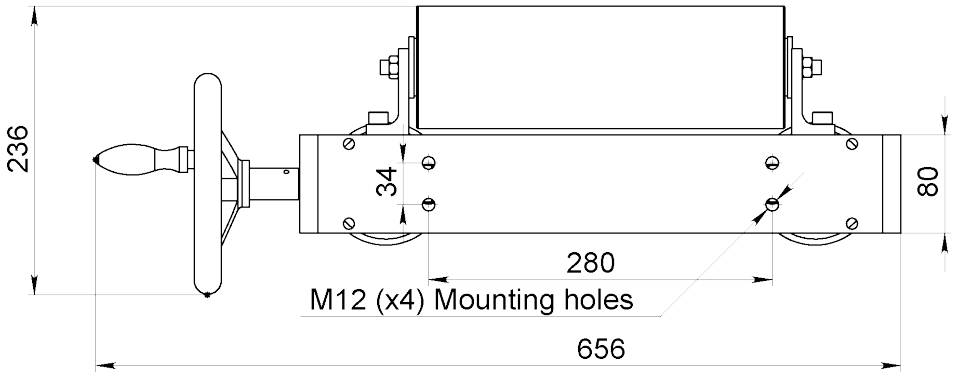

Article: 07764

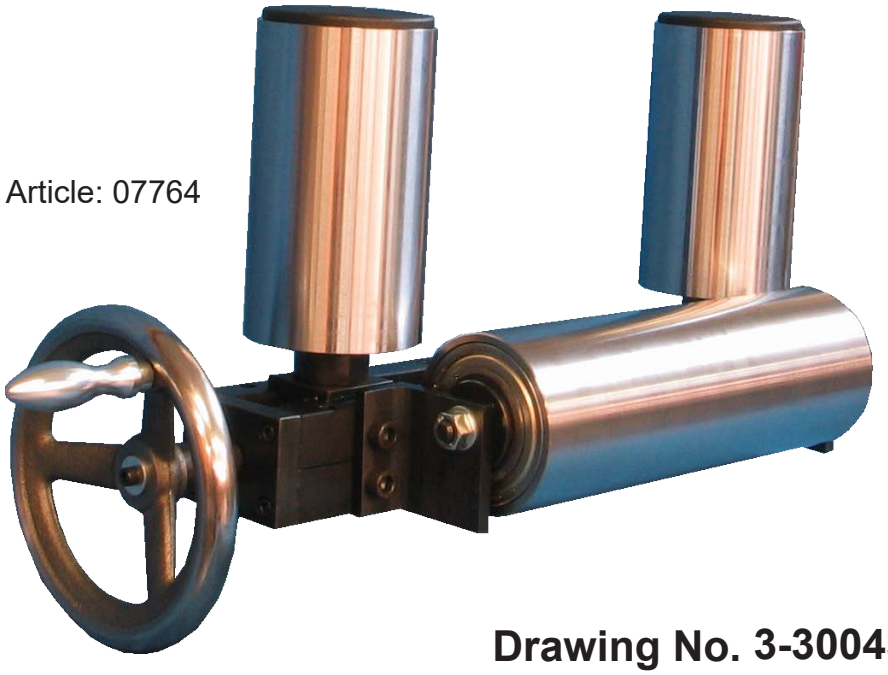

Drawing No. 3-300438-00

Subec AB **Hesselmans Torg 5** **SE- 131 54 Nacka** **Sweden** **Phone: +46-8-88 46 33** **Email: info@subec.se** **Web: www.subec.se**

Copyright © 2026 Subec

HEAVY DUTY ROLLER GUIDE SYSTEM WITH SIDE MOVEMENT

Max Product Ø: 320mm

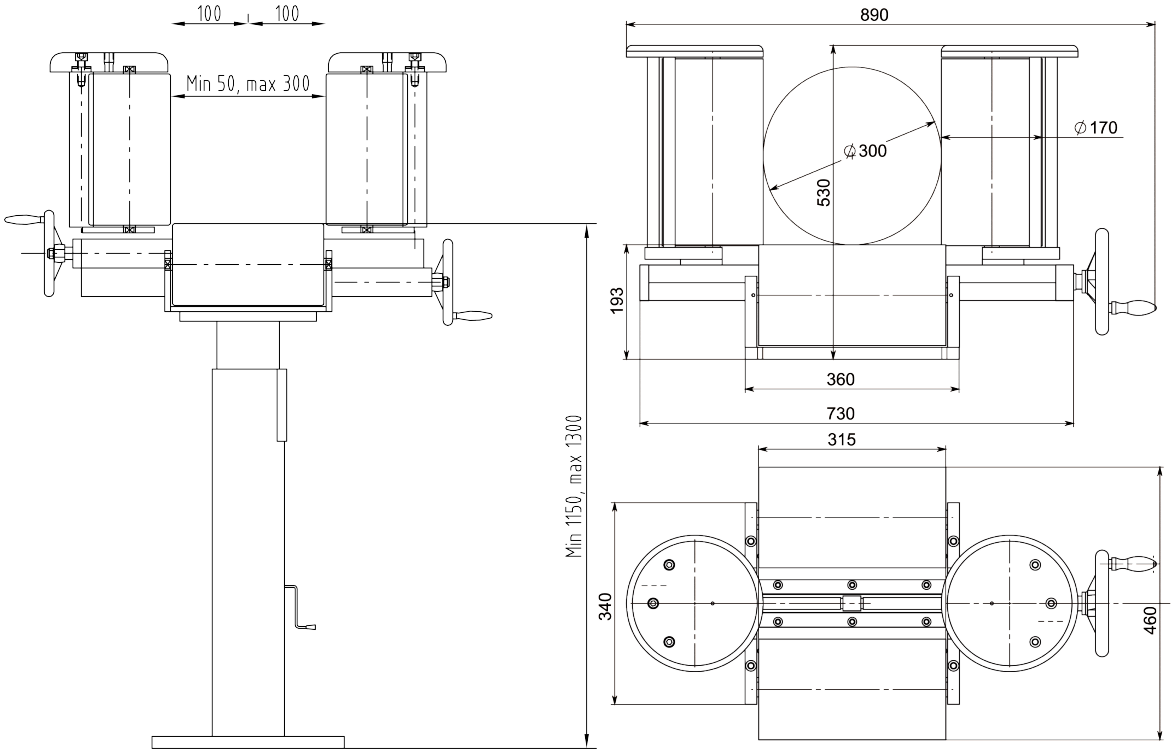





Article: 04987
Weight: 65kg

On height adjustable stand
Article: 7679

Drawing No. 3-300133-00

Subec AB **Hesselmans Torg 5** **SE- 131 54 Nacka** **Sweden** **Phone: +46-8-88 46 33** **Email: info@subec.se** **Web: www.subec.se**

Copyright © 2026 Subec

BELT GUIDE

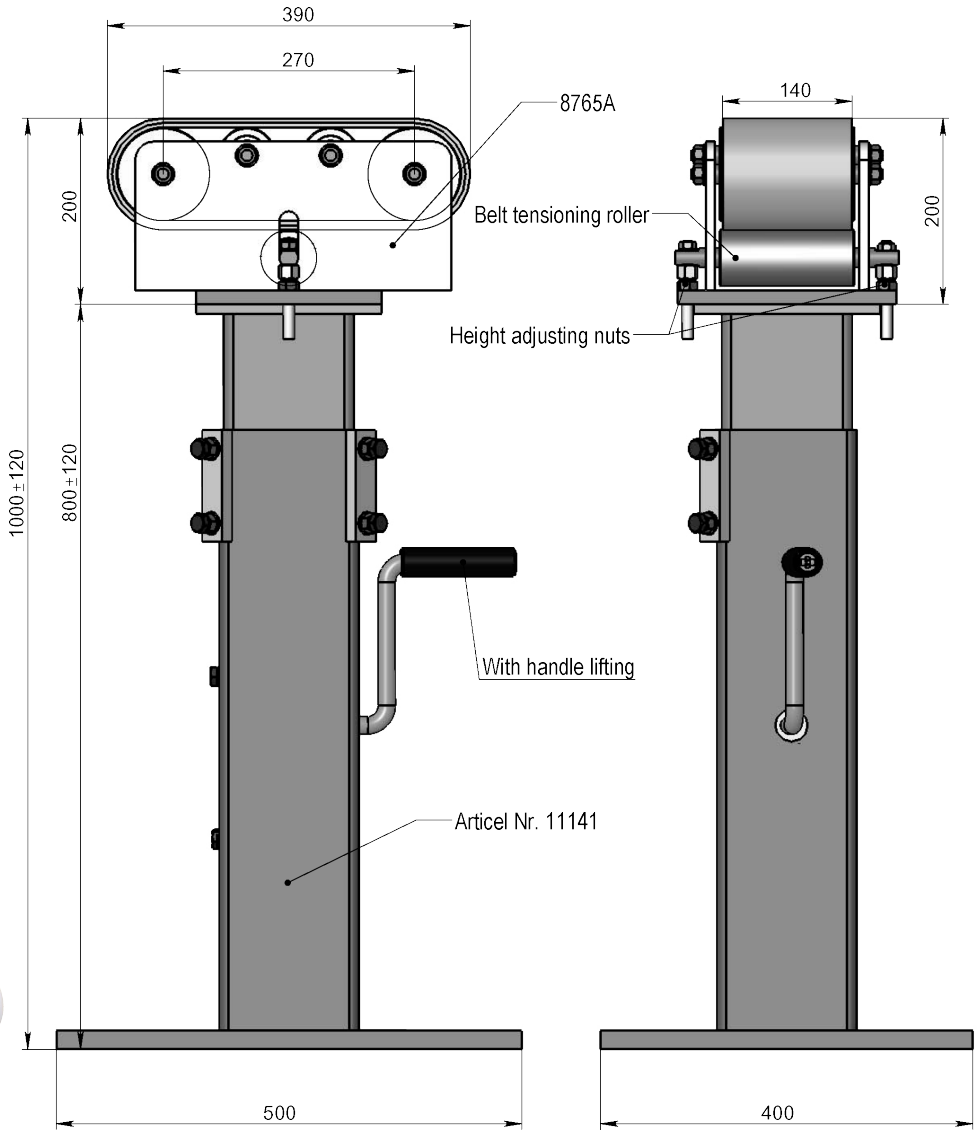



On height adjustable stand

Belt Guide Article: 08765A
With crank lifting: 3-400461-00
With telescopical adjustment: 1-300110-00

Drawing No. 3-401122-00

Subec AB **Hesselmans Torg 5** **SE- 131 54 Nacka** **Sweden** **Phone: +46-8-88 46 33** **Email: info@subec.se** **Web: www.subec.se**

Copyright © 2026 Subec

CUSTOMIZED ROLLER CROSS

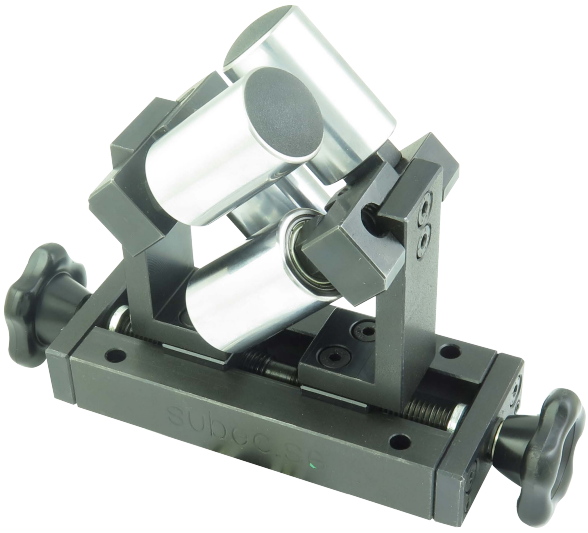

Article: 10312
Two side individually adjustable roller cross.



Article: 14742
Cable/wire and tube separator
6 vertical and 2 horizontal rollers.



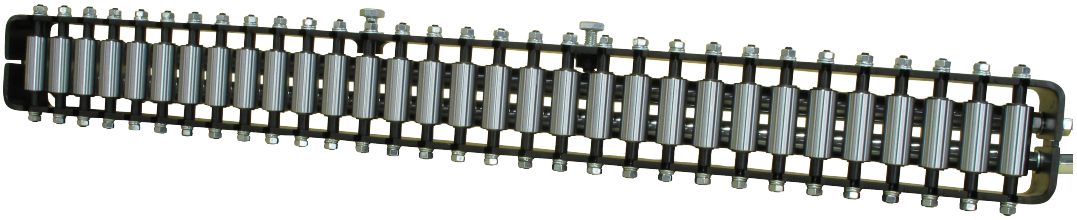

Article: 11838
Cable/wire and tube seperator
31 vertical and 2 horizontal rollers.

More information on request

Subec AB **Hesselmans Torg 5** **SE- 131 54 Nacka** **Sweden** **Phone: +46-8-88 46 33** **Email: info@subec.se** **Web: www.subec.se**

Copyright © 2026 Subec

CUSTOMIZED ROLLER CROSS

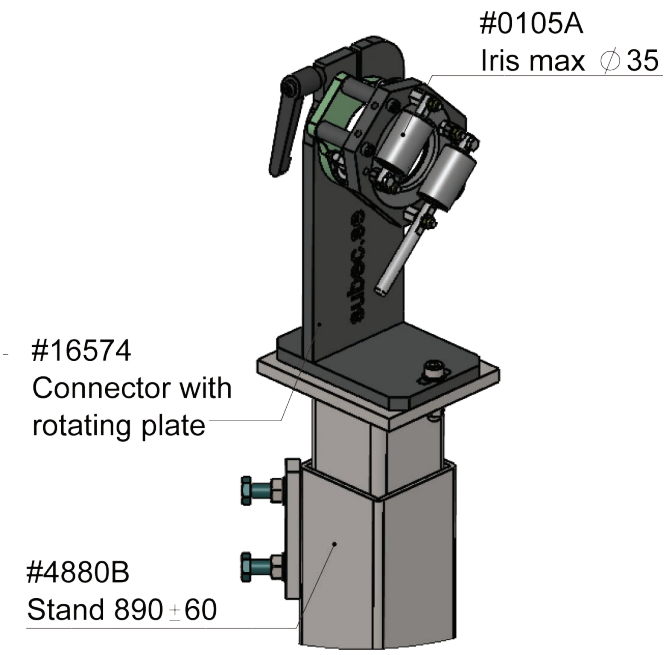

Article: 16574
Rotating roller box for directional control of flat cable.



Article: 06204
One foldable vertical roller for product insertion

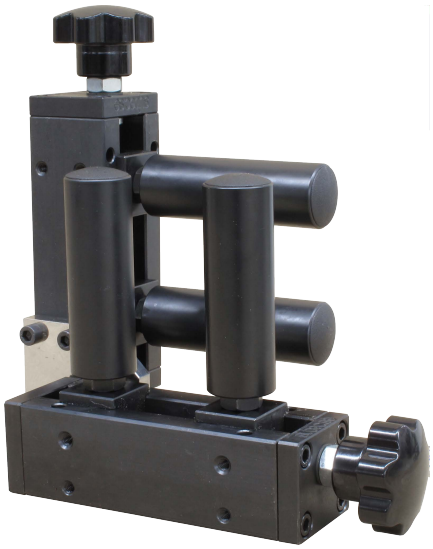

Article: 13250
Roller cross with ‘anti-stick’ teflon rollers

Subec AB **Hesselmans Torg 5** **SE- 131 54 Nacka** **Sweden** **Phone: +46-8-88 46 33** **Email: info@subec.se** **Web: www.subec.se**

Copyright © 2026 Subec

MINI ADJUSTABLE ROLLER CROSS

Max Opening: 0-13mm (1/2 inch)

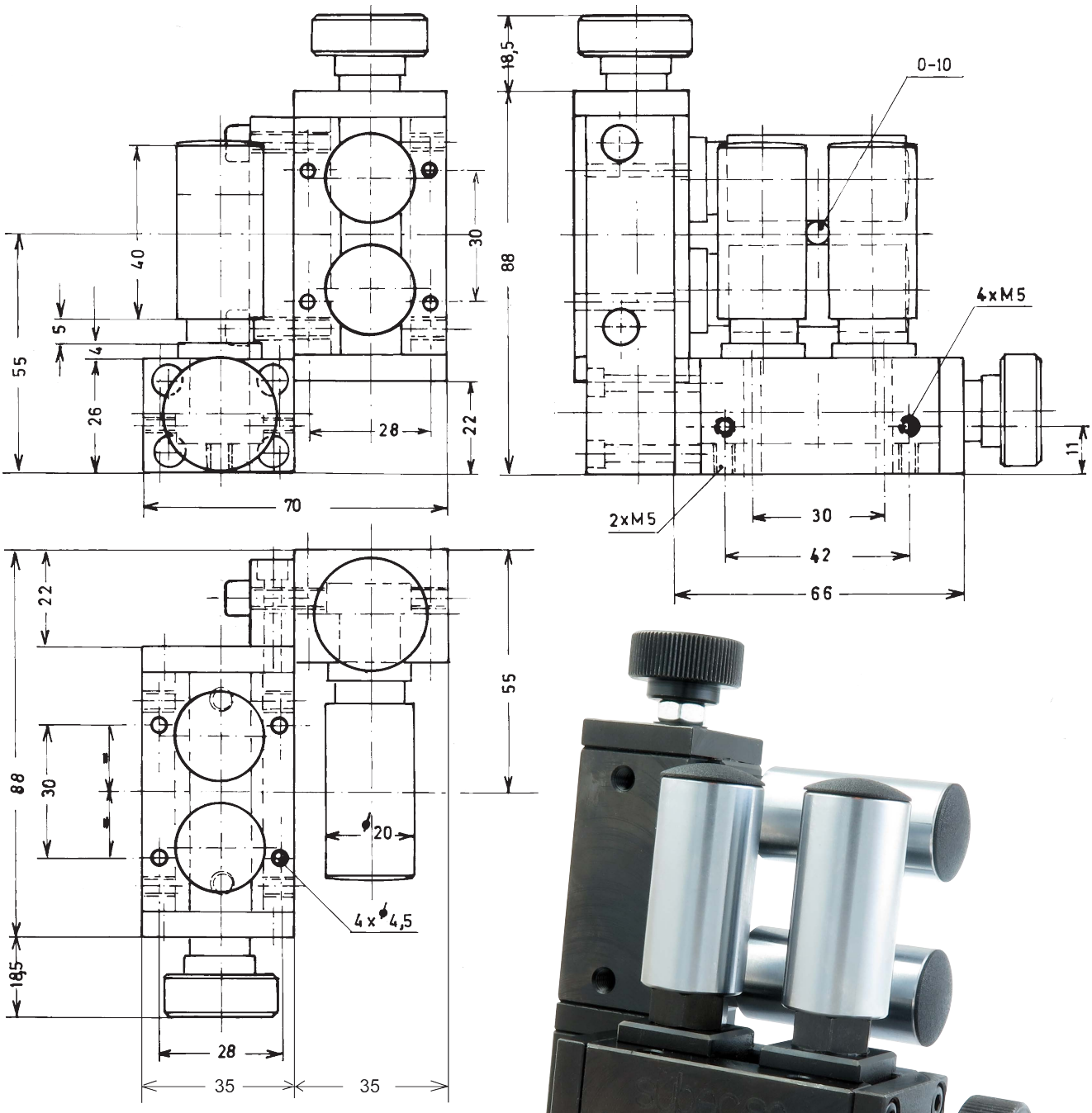

L-R Article: 14847
R-L Article: 03945*
Weight: 1,25kg

Drawing No. 3-300124-00

* Stock item

Subec AB **Hesselmans Torg 5** **SE- 131 54 Nacka** **Sweden** **Phone: +46-8-88 46 33** **Email: info@subec.se** **Web: www.subec.se**

Copyright © 2026 Subec

MINI ADJUSTABLE ROLLER CROSS

Max Opening: 45mm

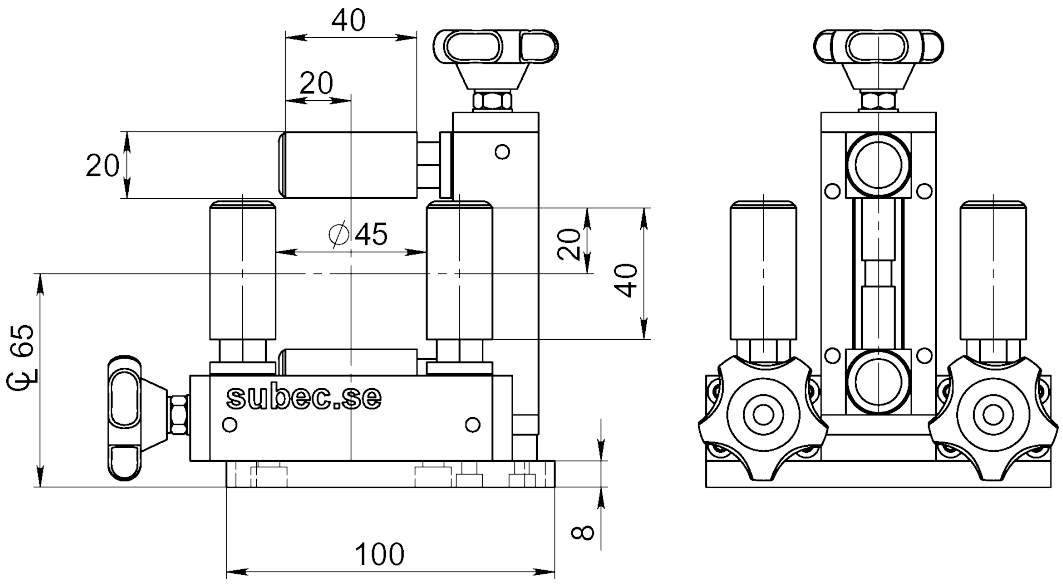

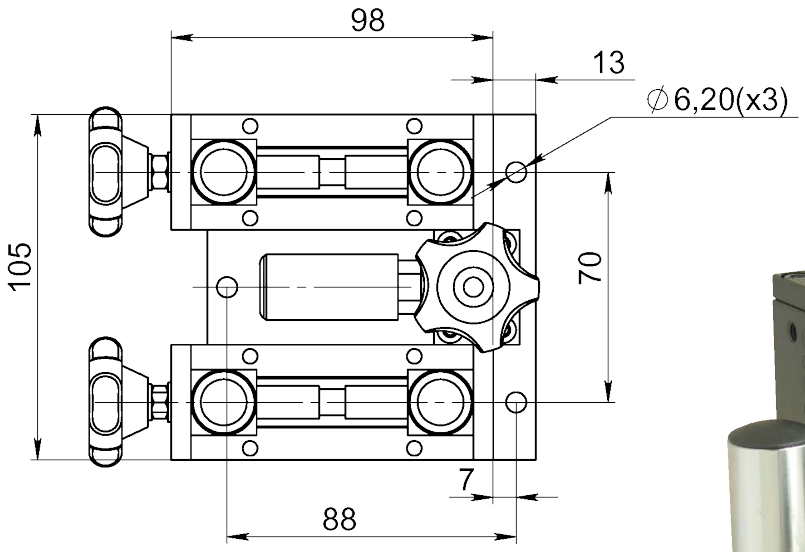



Article: 00047*
Weight: 2,8kg

Drawing No. 3-400350-00

* Stock item

Subec AB **Hesselmans Torg 5** **SE- 131 54 Nacka** **Sweden** **Phone: +46-8-88 46 33** **Email: info@subec.se** **Web: www.subec.se**

Copyright © 2026 Subec

ADJUSTABLE ROLLER CROSS

Max Opening: 0-30mm

Rollers:

Standard: HRX (Surface hardened + chromium coated)

Option: Various Plastics, Stainless

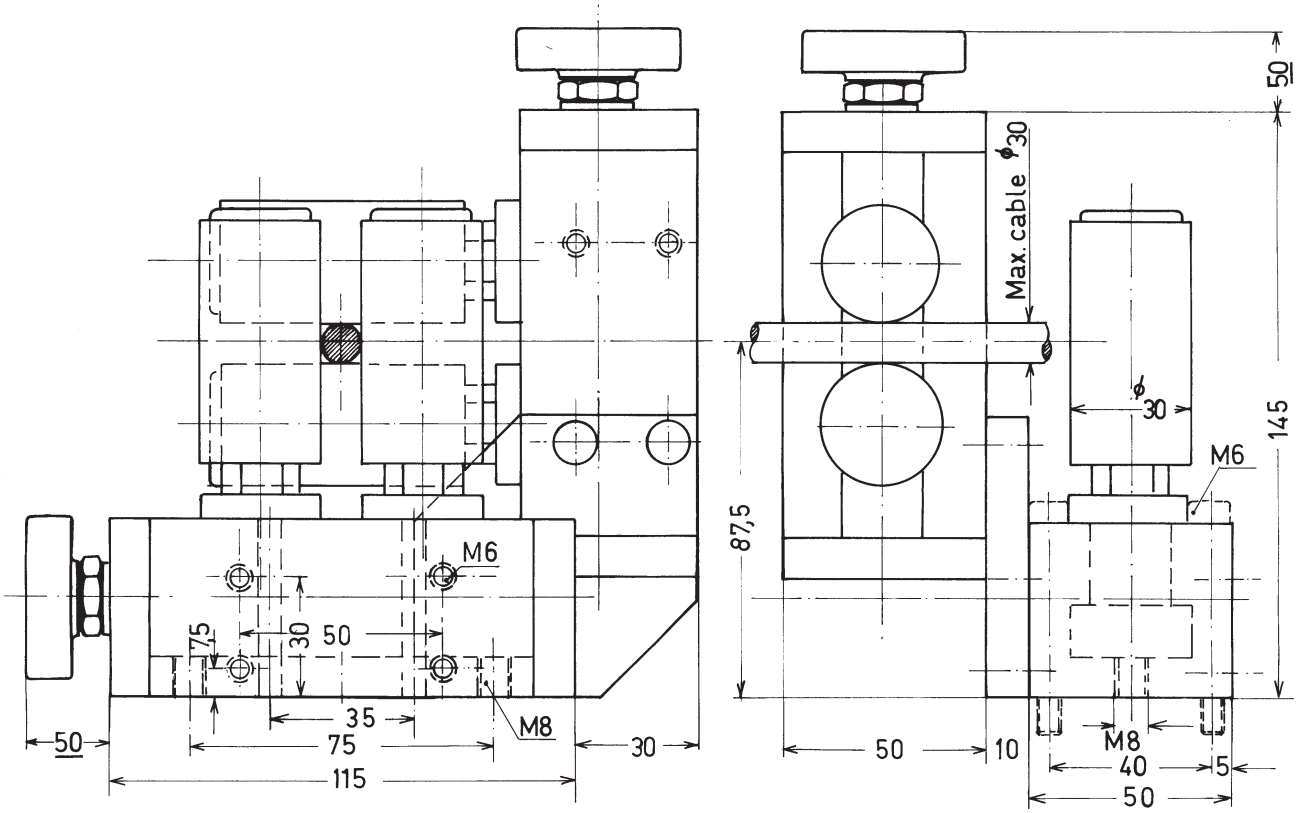

Article: 00051*

Weight: 5kg



Drawing No. 3-400283-00

* Stock item

Subec AB **Hesselmans Torg 5** **SE- 131 54 Nacka** **Sweden** **Phone: +46-8-88 46 33** **Email: info@subec.se** **Web: www.subec.se**

Copyright © 2026 Subec

ADJUSTABLE ROLLER CROSS

Max Opening: 30mm

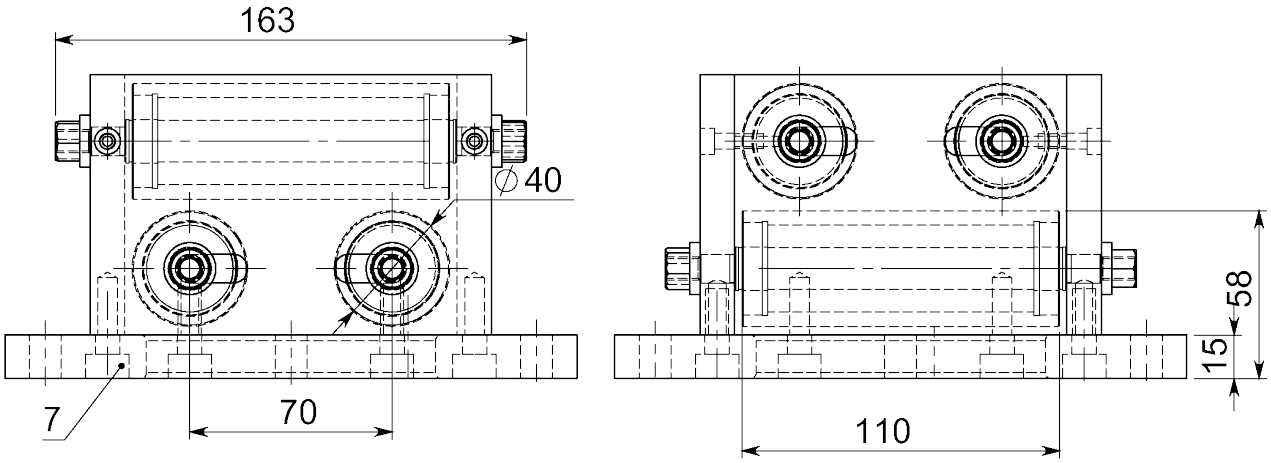

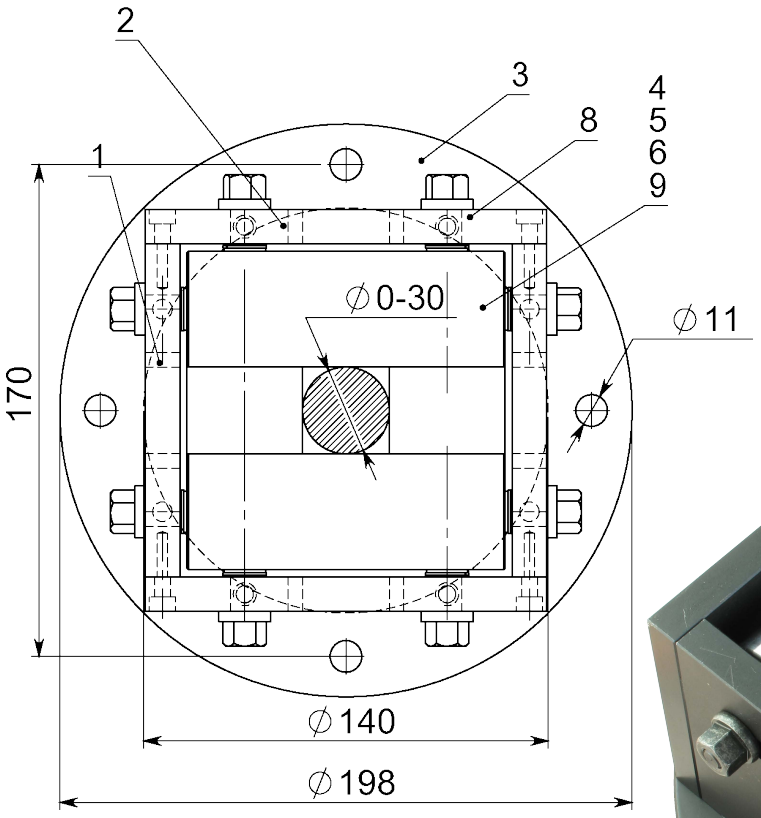

Article: 10260*
Weight: 9,3kg

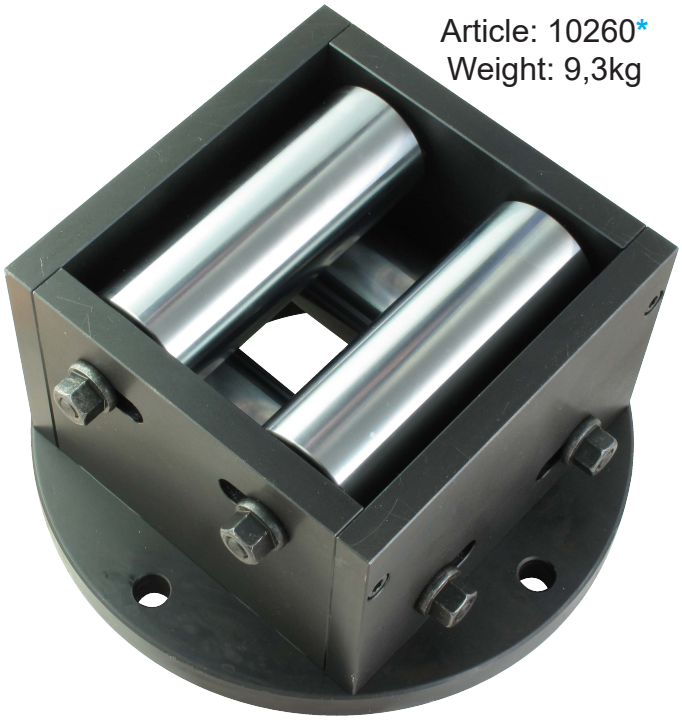

Drawing No. 3-300119-00

* Stock item

Subec AB **Hesselmans Torg 5** **SE- 131 54 Nacka** **Sweden** **Phone: +46-8-88 46 33** **Email: info@subec.se** **Web: www.subec.se**

Copyright © 2026 Subec

ADJUSTABLE SPRING LOADED ROLLER CROSS

Max Opening: Ø 0-20mm (+20mm spring)

Rollers:

Standard: HRX (Surface hardened + chromium coated)

Option: Various Plastics, Stainless

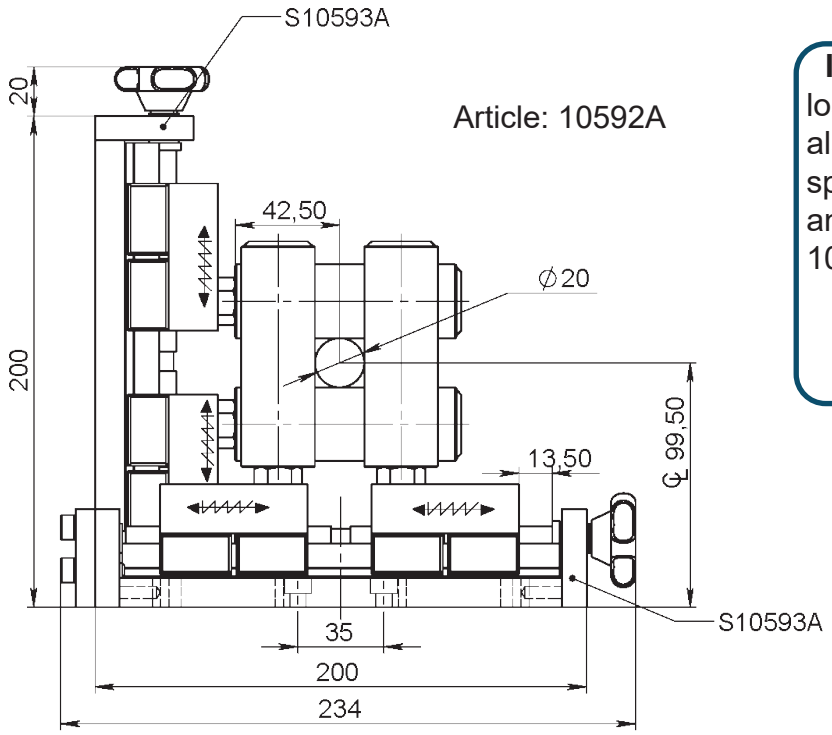

Article: 10592A

Info: These spring loaded roller crosses are also available with various spring forces (27N default) and as single **execution** 10593A

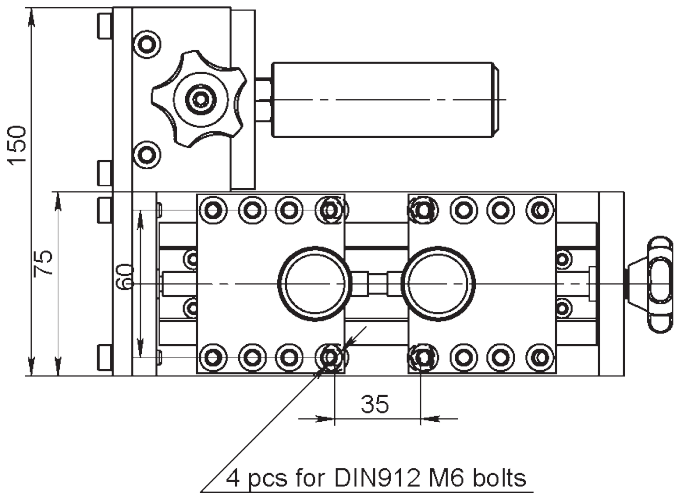

Article: 11987

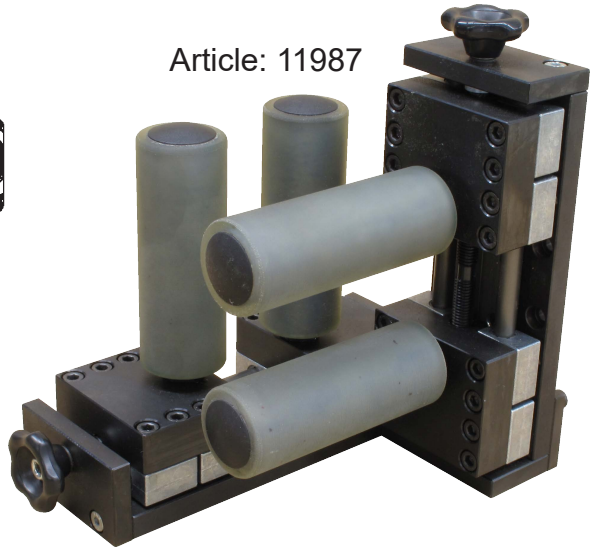

Article	Rollers
10592A	Ø30x90 HRX
11987	Ø30x110 PU65 Shore A

Drawing No. 3-401250-00

Subec AB **Hesselmans Torg 5** **SE- 131 54 Nacka** **Sweden** **Phone: +46-8-88 46 33** **Email: info@subec.se** **Web: www.subec.se**

Copyright © 2026 Subec

PNEUMATIC ADJUSTABLE ROLLER CROSS

Max Opening: 36mm

Rollers:

Standard: HRX (Surface hardened + chromium coated)

Option: Various Plastics, Stainless

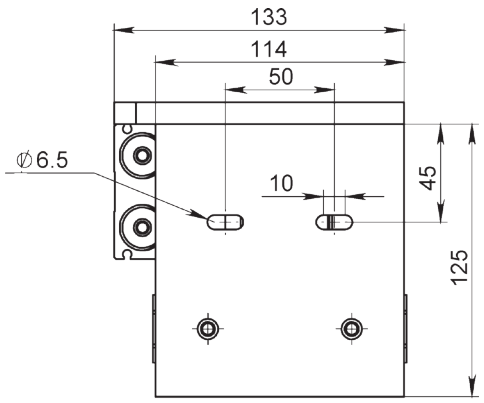

Article: 09082*

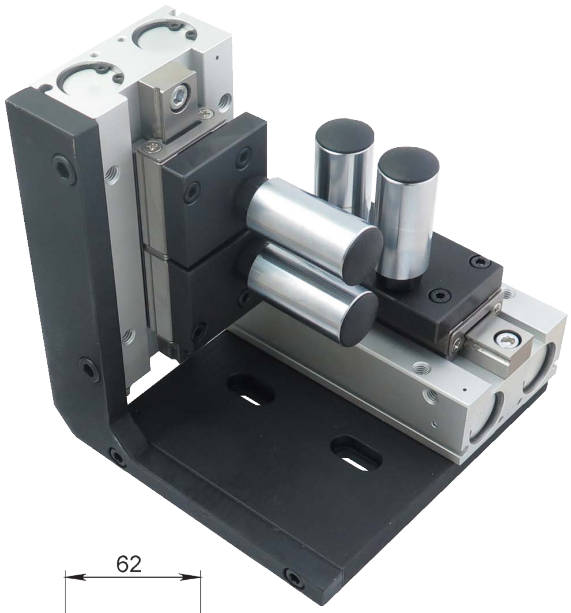

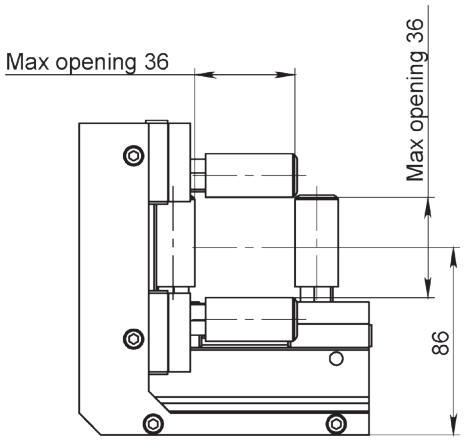

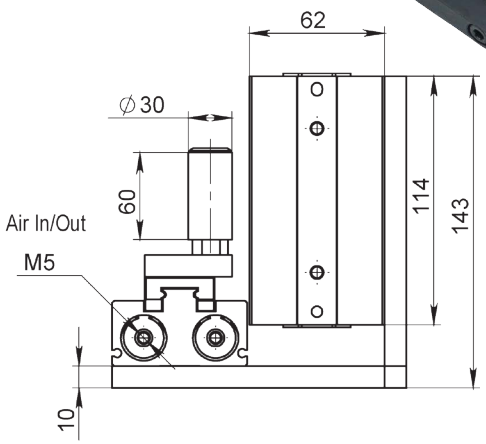

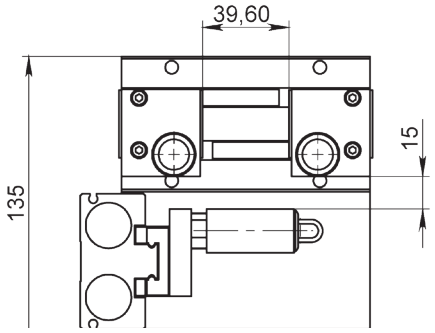

Max Opening: 80mm
D40 L110 Rollers
PU-Coated Rollers - Article: 10244
(Optional)



Drawing No. 3-401144-00

* Stock item

Subec AB **Hesselmans Torg 5** **SE- 131 54 Nacka** **Sweden** **Phone: +46-8-88 46 33** **Email: info@subec.se** **Web: www.subec.se**

Copyright © 2026 Subec

ADJUSTABLE ROLLER CROSS

Max Opening: 0-60mm

Rollers:

Standard: HRX (Surface hardened + chromium coated)

Option: Various Plastics, Stainless

Handwheel is standard but crank is also available

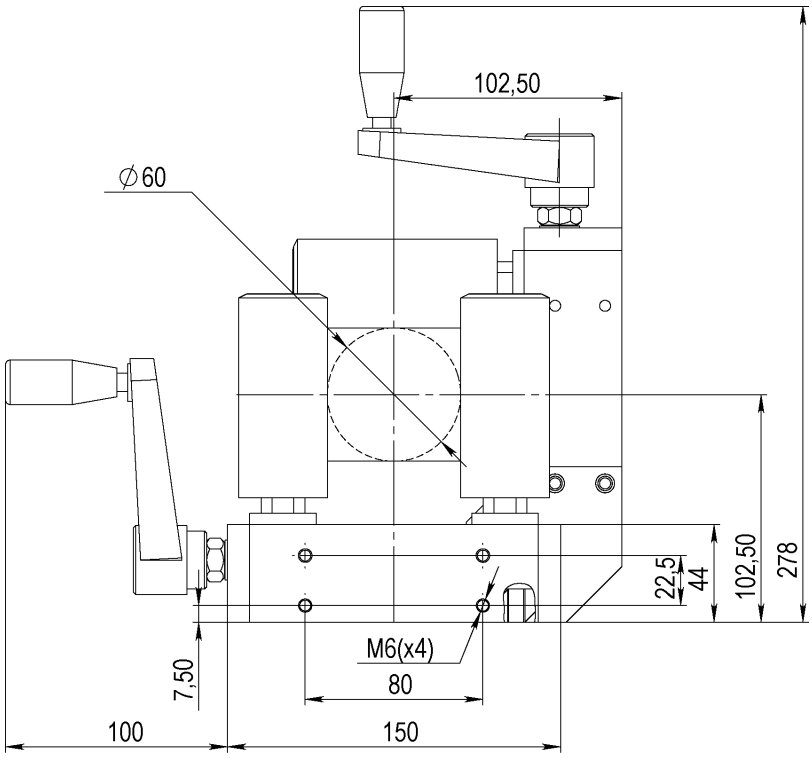

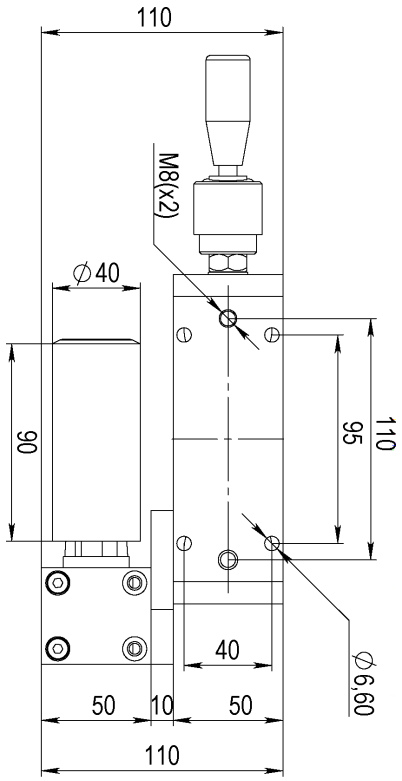

Article: 13020
Tungsten Carbide Rollers



Article: 14973A
All rollers spring loaded and individually adjustable horizontal rollers

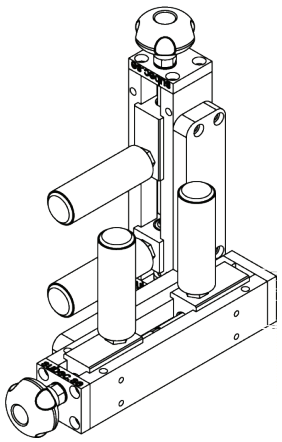

Article: 00053*
Weight: 7kg

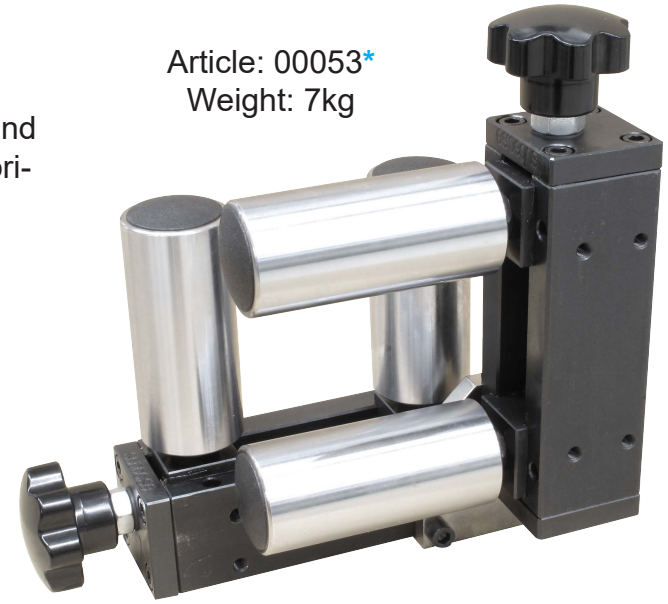

Drawing No. 3-300079-00

* Stock item

Subec AB **Hesselmans Torg 5** **SE- 131 54 Nacka** **Sweden** **Phone: +46-8-88 46 33** **Email: info@subec.se** **Web: www.subec.se**

Copyright © 2026 Subec

ADJUSTABLE ROLLER CROSS

Max Opening: 0-70mm

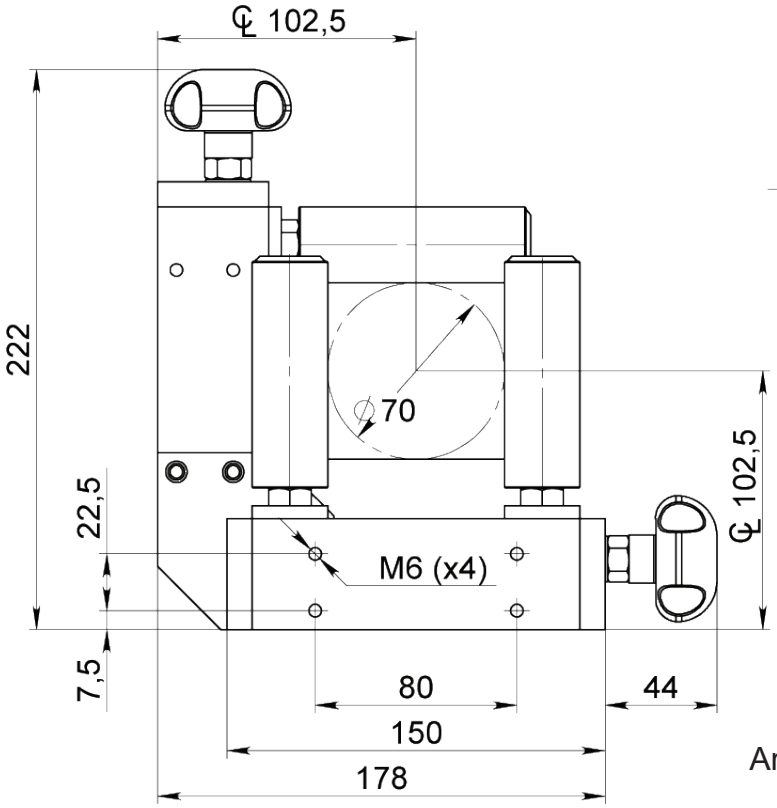

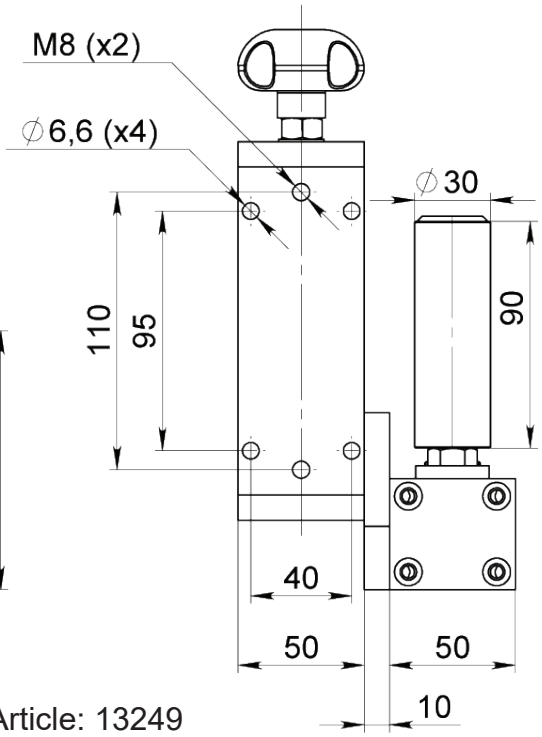

Article: 13249

Option: With lockable **handwheel**

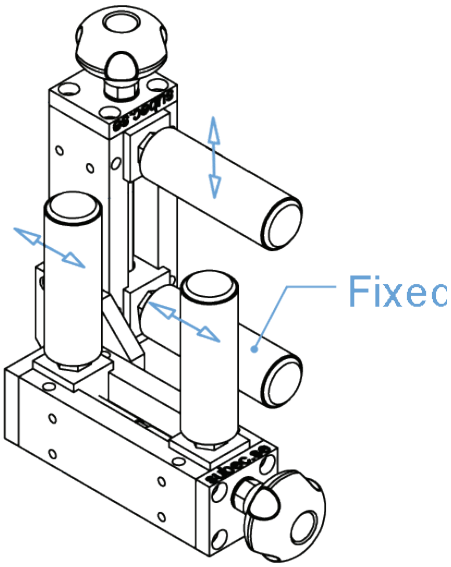

Available with fixed rollers
Article: 13250

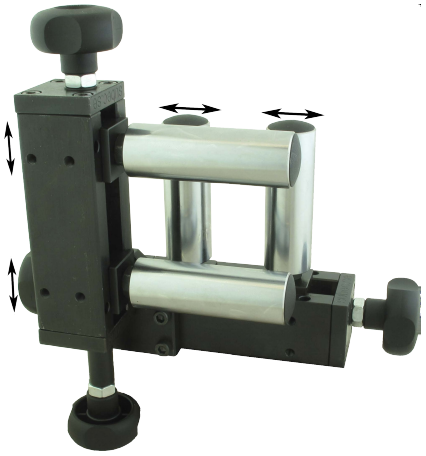

Available with all rollers individually adjustable
Article: 06292*
Weight: 6,1kg

Drawing No. 3-300079-00

* Stock item

Subec AB **Hesselmans Torg 5** **SE- 131 54 Nacka** **Sweden** **Phone: +46-8-88 46 33** **Email: info@subec.se** **Web: www.subec.se**

Copyright © 2026 Subec

HEAVY DUTY ADJUSTABLE ROLLER CROSS

Max Opening: 0-90mm

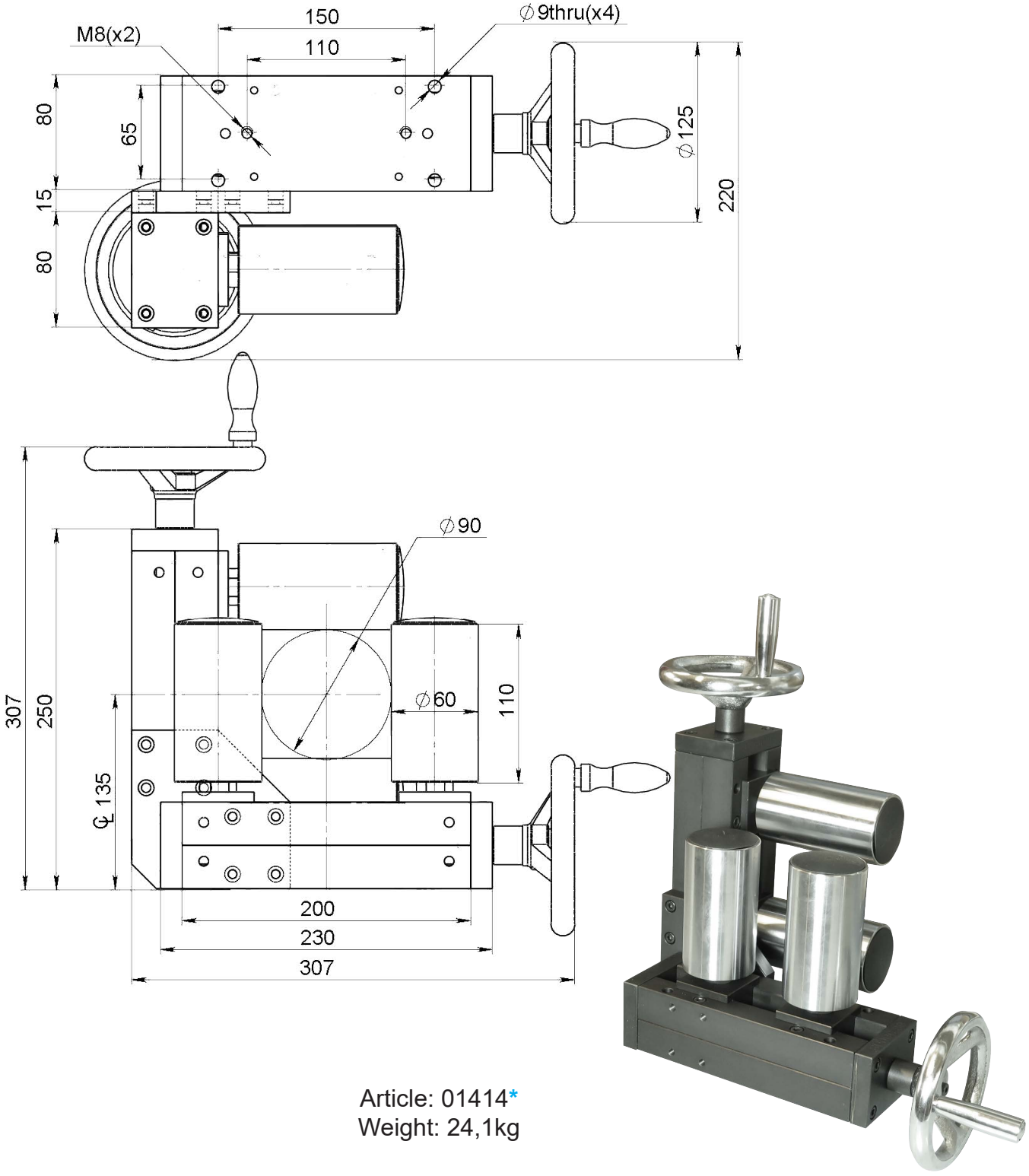

Article: 01414*
Weight: 24,1kg

Drawing No. 3-400481-00

* Stock item

Subec AB **Hesselmans Torg 5** **SE- 131 54 Nacka** **Sweden** **Phone: +46-8-88 46 33** **Email: info@subec.se** **Web: www.subec.se**

Copyright © 2026 Subec

ADJUSTABLE ROLLER CROSS

Max Opening: 0-125mm

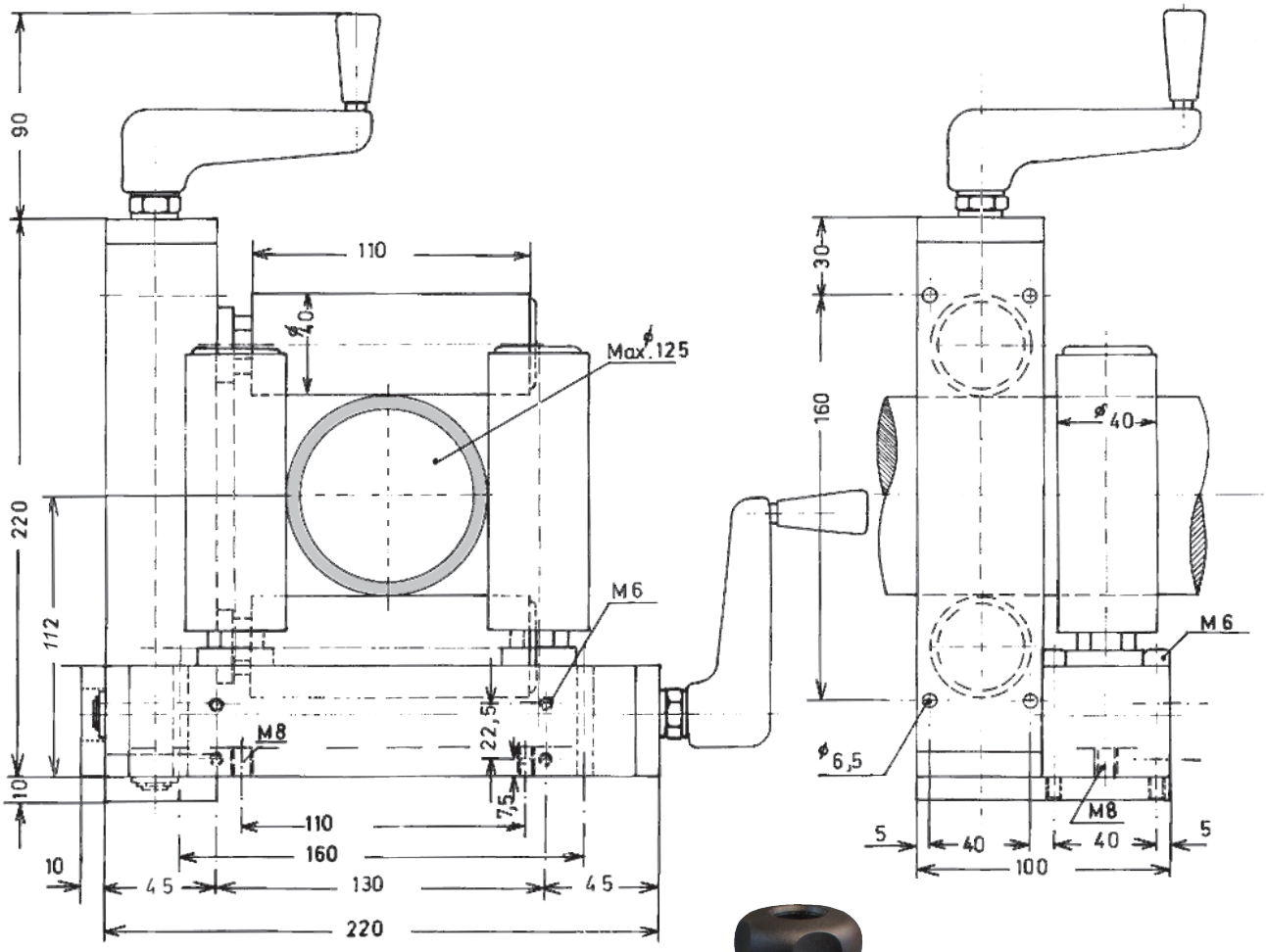

L-R Article: 6454*
R-L Article: 7007*
Weight: 9,8kg

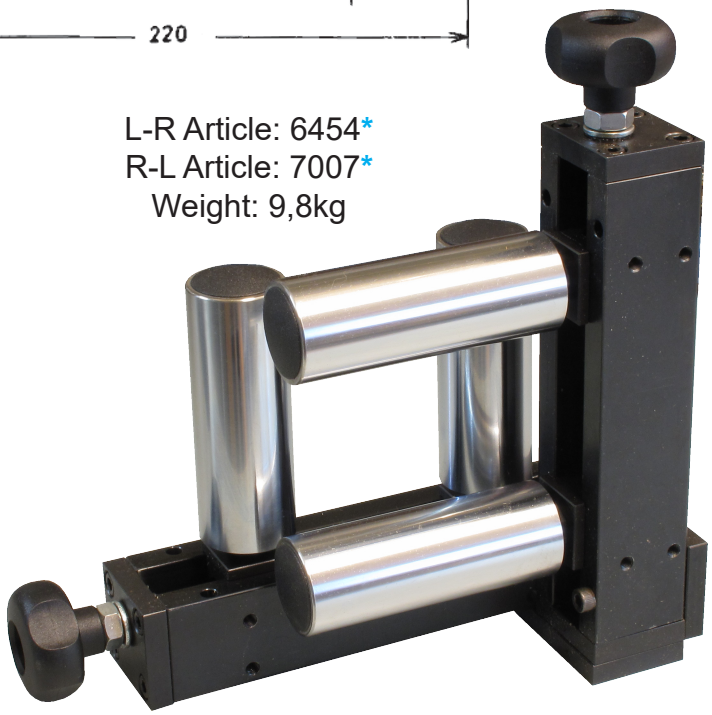

Drawing No. 3-200012-00

* Stock item

Subec AB **Hesselmans Torg 5** **SE- 131 54 Nacka** **Sweden** **Phone: +46-8-88 46 33** **Email: info@subec.se** **Web: www.subec.se**

Copyright © 2026 Subec

ADJUSTABLE ROLLER CROSS

Max Opening: 0-150mm

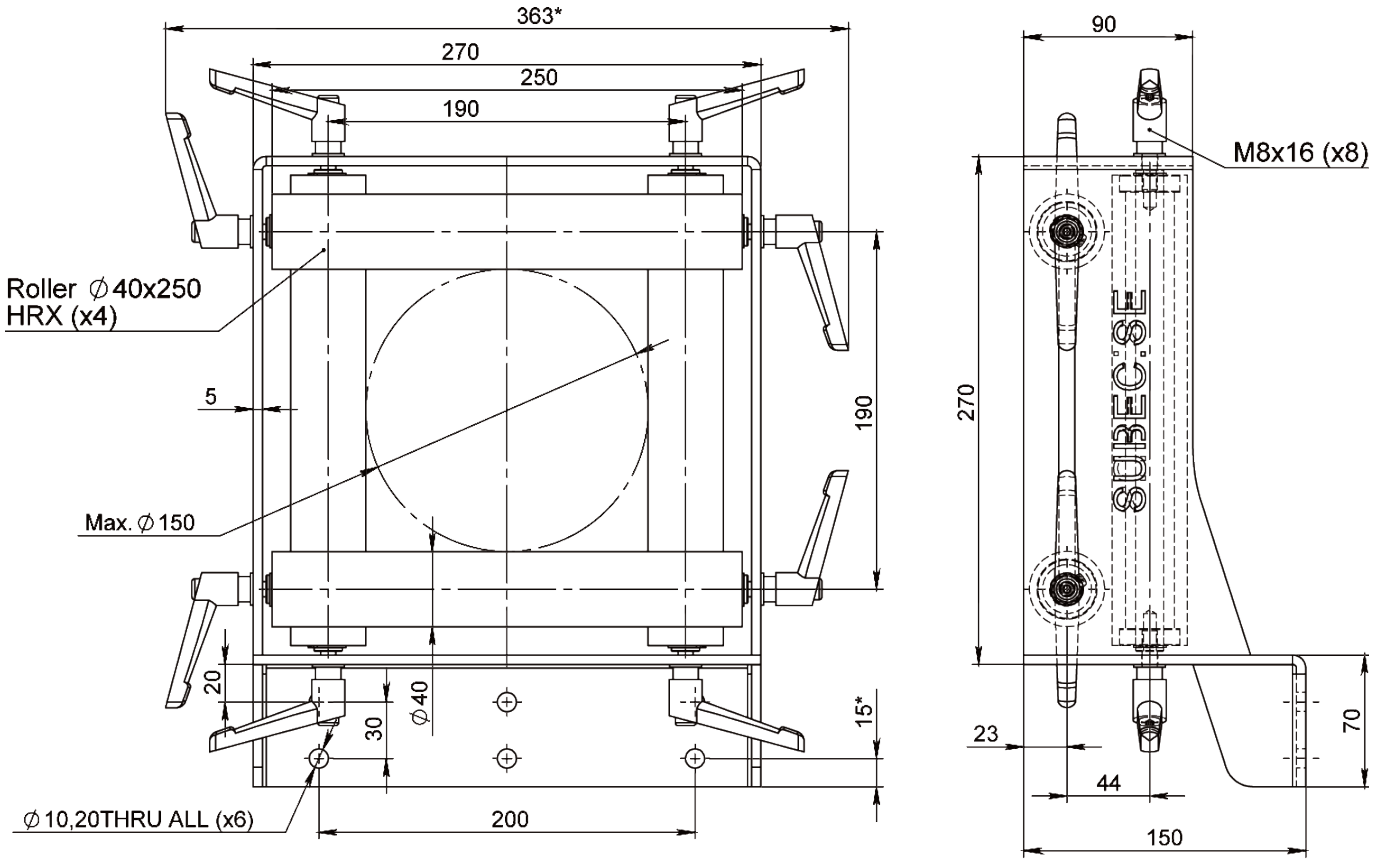

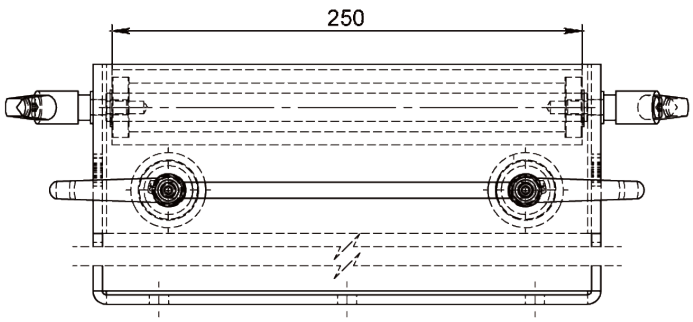



Article: 16737
Weight: 12,75kg

Drawing No. 3-401450-00

Subec AB **Hesselmans Torg 5** **SE- 131 54 Nacka** **Sweden** **Phone: +46-8-88 46 33** **Email: info@subec.se** **Web: www.subec.se**

Copyright © 2026 Subec

HEAVY DUTY ADJUSTABLE ROLLER CROSS

Max Opening: 0-170mm

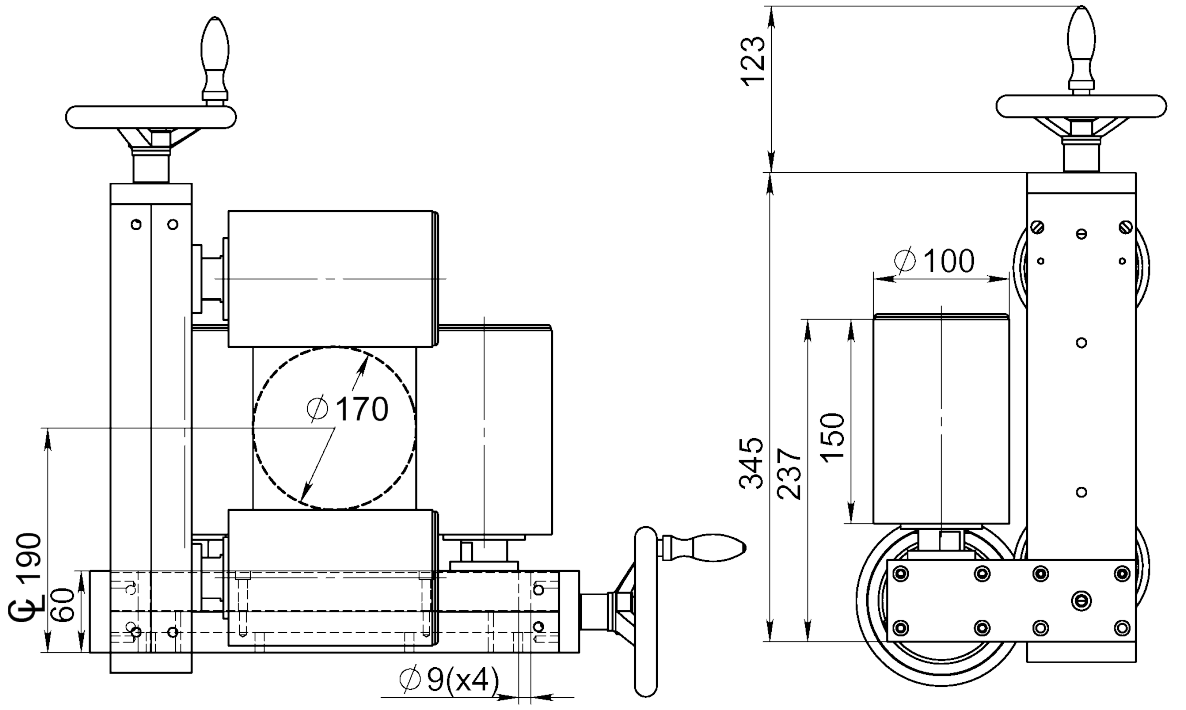

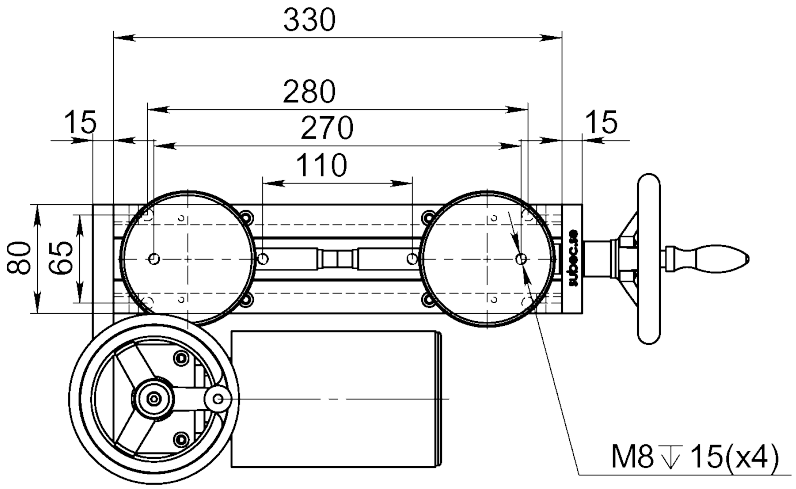

Article: 00059
Weight: 41kg

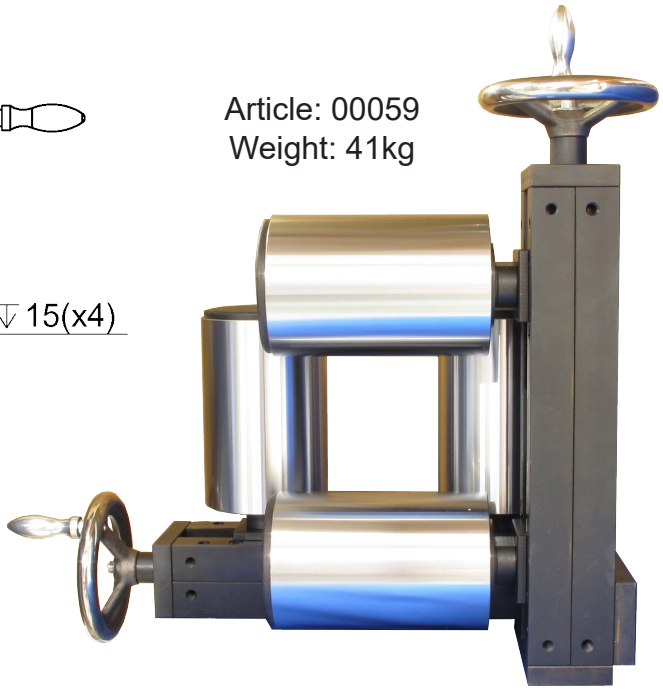

Drawing No. 3-300093-02

Subec AB **Hesselmans Torg 5** **SE- 131 54 Nacka** **Sweden** **Phone: +46-8-88 46 33** **Email: info@subec.se** **Web: www.subec.se**

Copyright © 2026 Subec

HEAVY DUTY ADJUSTABLE ROLLER CROSS

Max Opening: 0-170mm

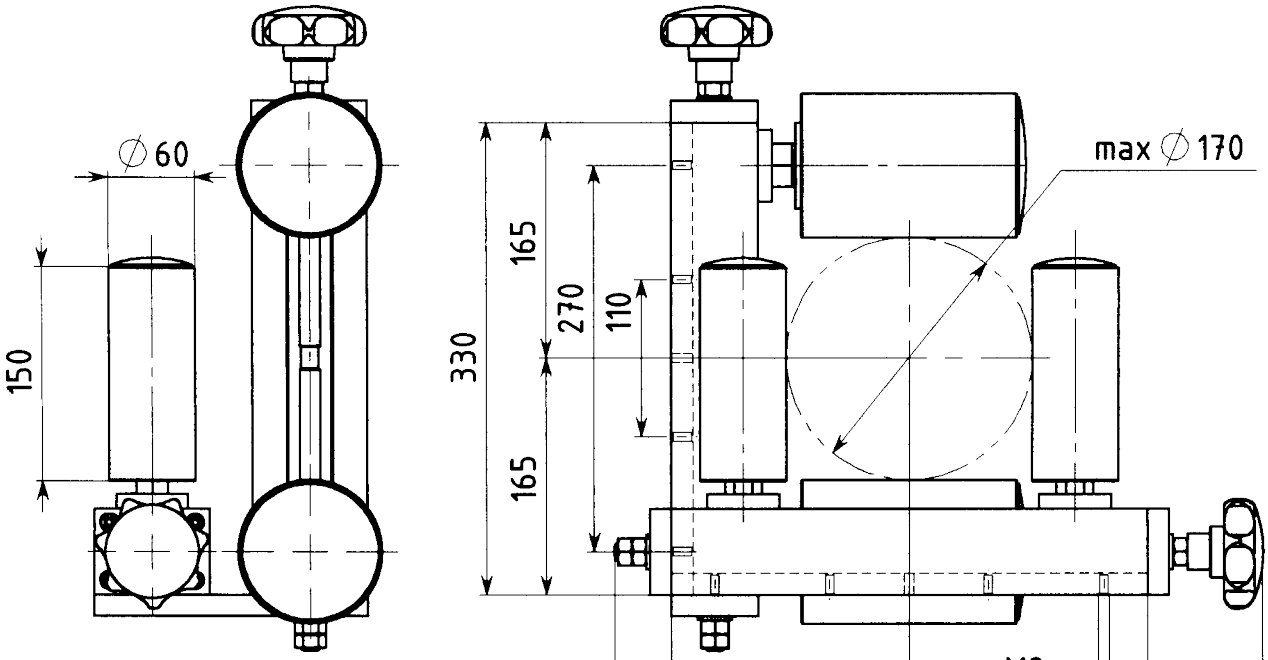

Article: 01214
Weight: 42kg

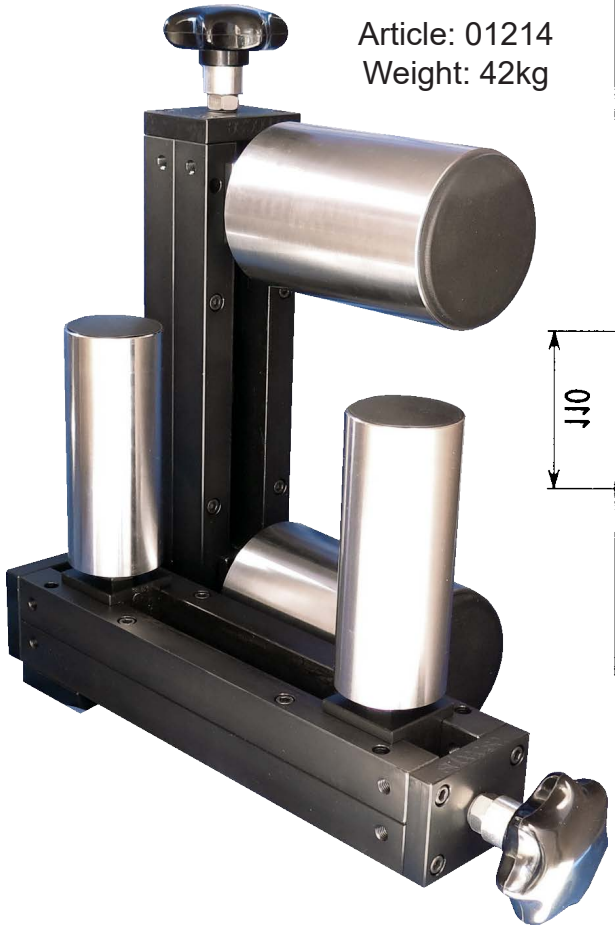

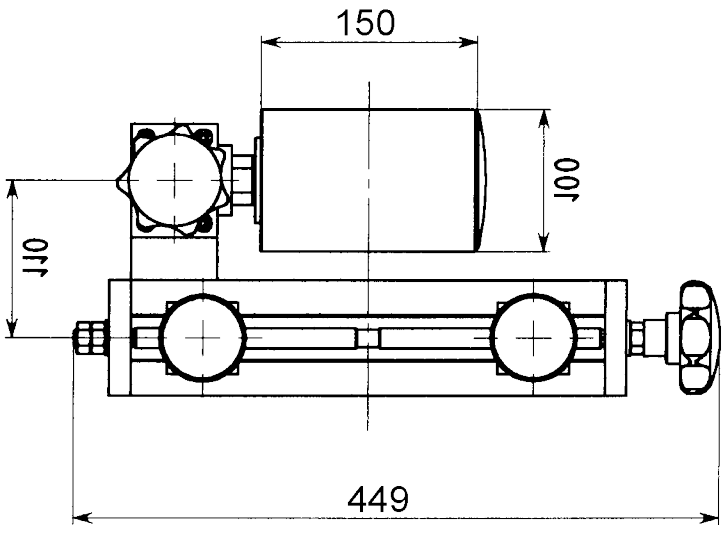

Drawing No. 3-400465-01

Subec AB **Hesselmans Torg 5** **SE- 131 54 Nacka** **Sweden** **Phone: +46-8-88 46 33** **Email: info@subec.se** **Web: www.subec.se**

Copyright © 2026 Subec

HEAVY DUTY ADJUSTABLE ROLLER CROSS

Max Opening: 0-180mm

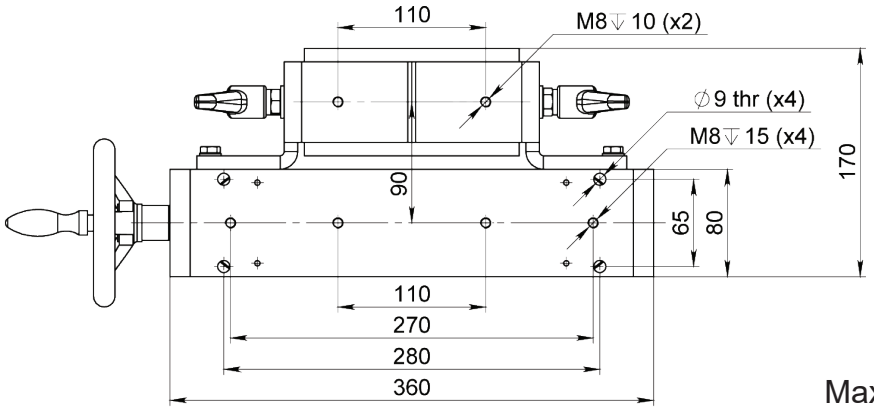

Article: 10616
Max Opening: 170mm
Weight: 28kg

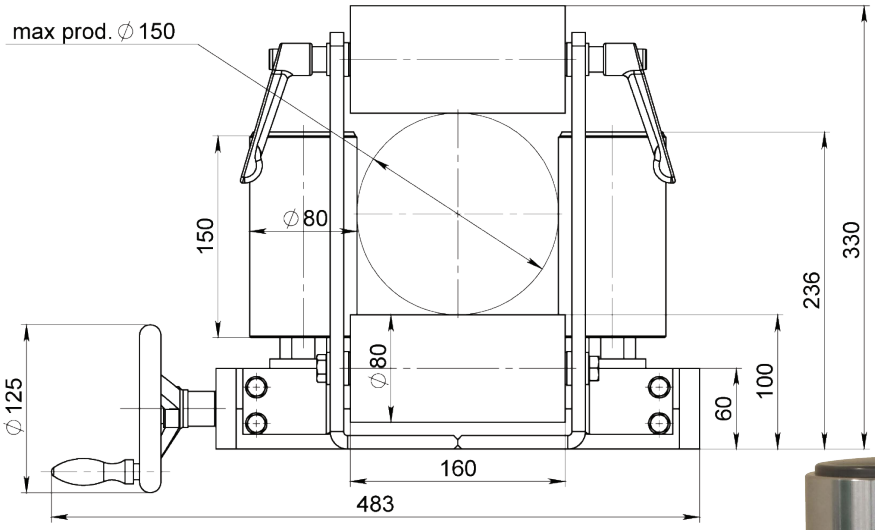

Also available with D80 L180 rollers.
Max Opening: 180mm
Article: 12766

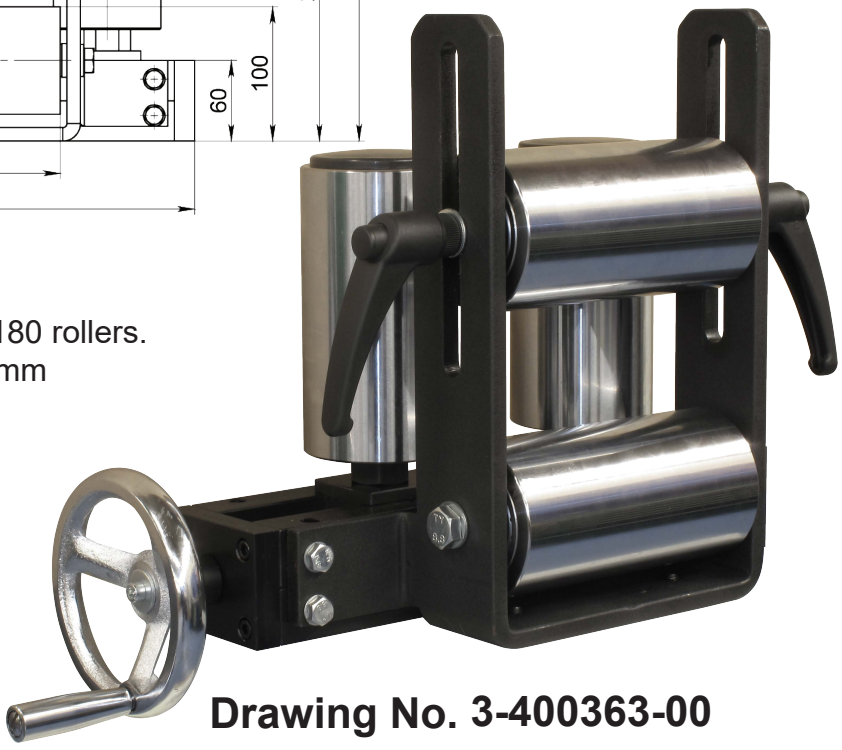

Drawing No. 3-400363-00

Subec AB **Hesselmans Torg 5** **SE- 131 54 Nacka** **Sweden** **Phone: +46-8-88 46 33** **Email: info@subec.se** **Web: www.subec.se**

Copyright © 2026 Subec

ADJUSTABLE ROLLER CROSS

Max Opening: 0-200mm

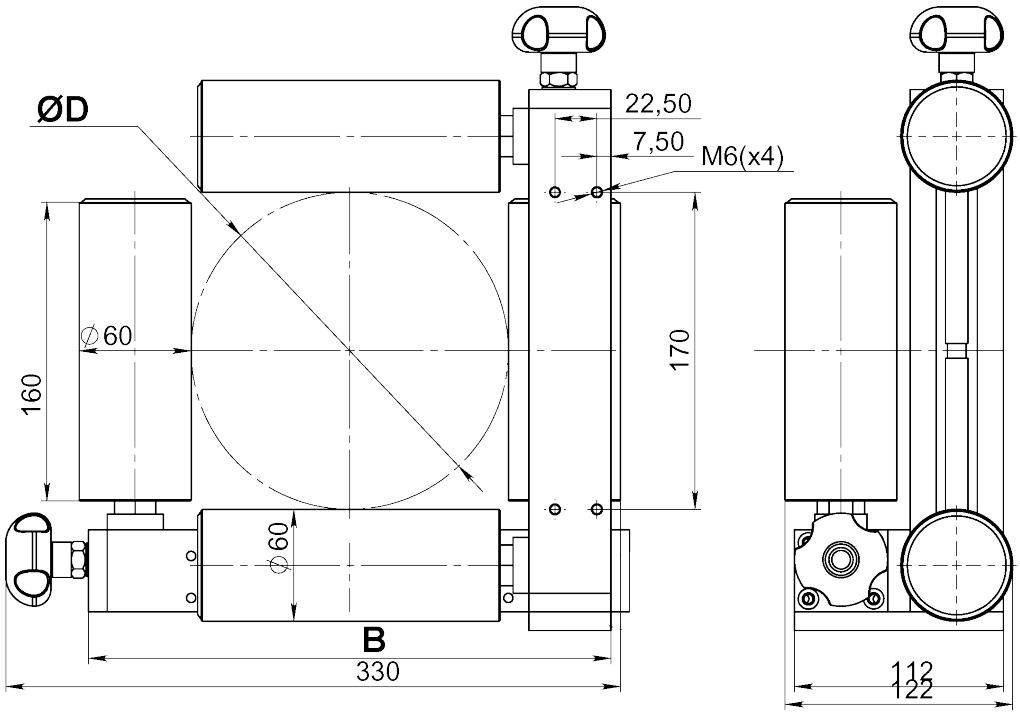

Option: With reinforced Handweel
Article: 04594



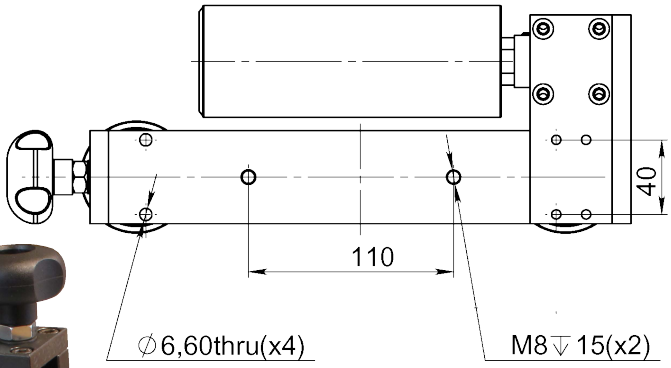

Article: 00058

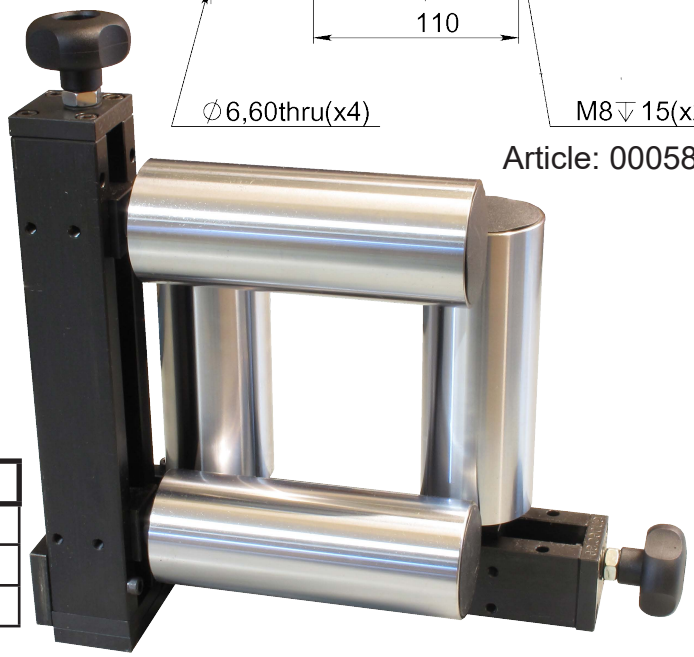

Article	ØD	B	Orientation	Weight
00058	170	280	R - L	18,2 kg
04593	200	310	R - L	21,8 kg
04594	200	310	L - R	21,8 kg

Drawing No. 3-400263-00

Subec AB **Hesselmans Torg 5** **SE- 131 54 Nacka** **Sweden** **Phone: +46-8-88 46 33** **Email: info@subec.se** **Web: www.subec.se**

Copyright © 2026 Subec

HEAVY DUTY ADJUSTABLE ROLLER CROSS

Max Opening: 0-250mm

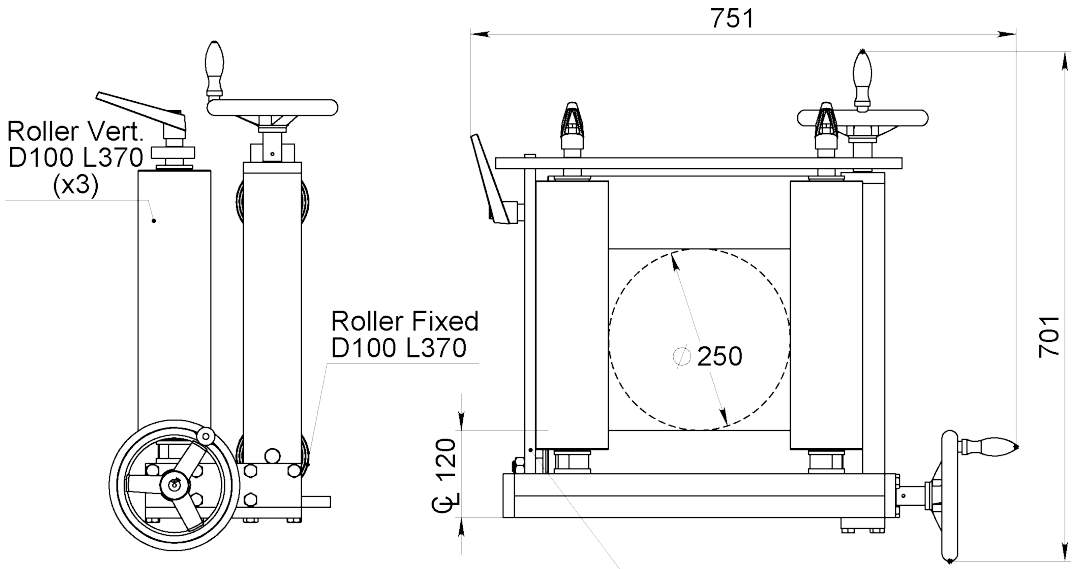

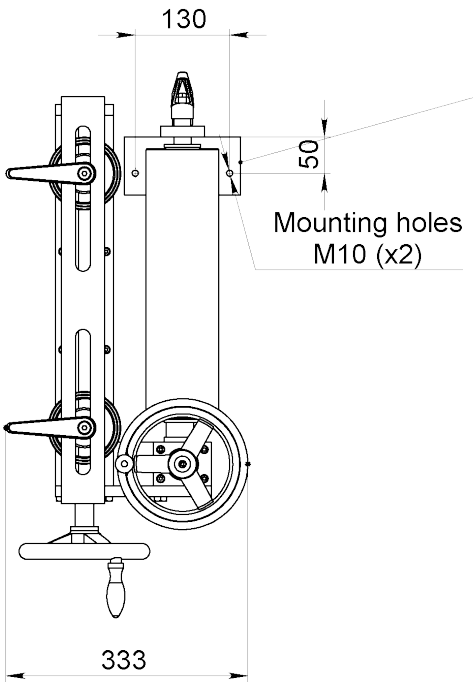

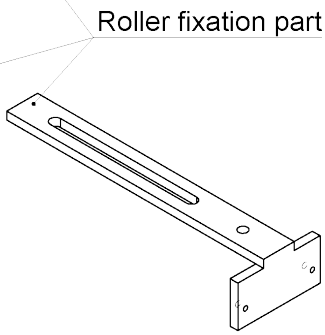



Article: 07482

Drawing No. 3-300093-02

Subec AB **Hesselmans Torg 5** **SE- 131 54 Nacka** **Sweden** **Phone: +46-8-88 46 33** **Email: info@subec.se** **Web: www.subec.se**

Copyright © 2026 Subec

NON-ADJUSTABLE ROLLER CROSS

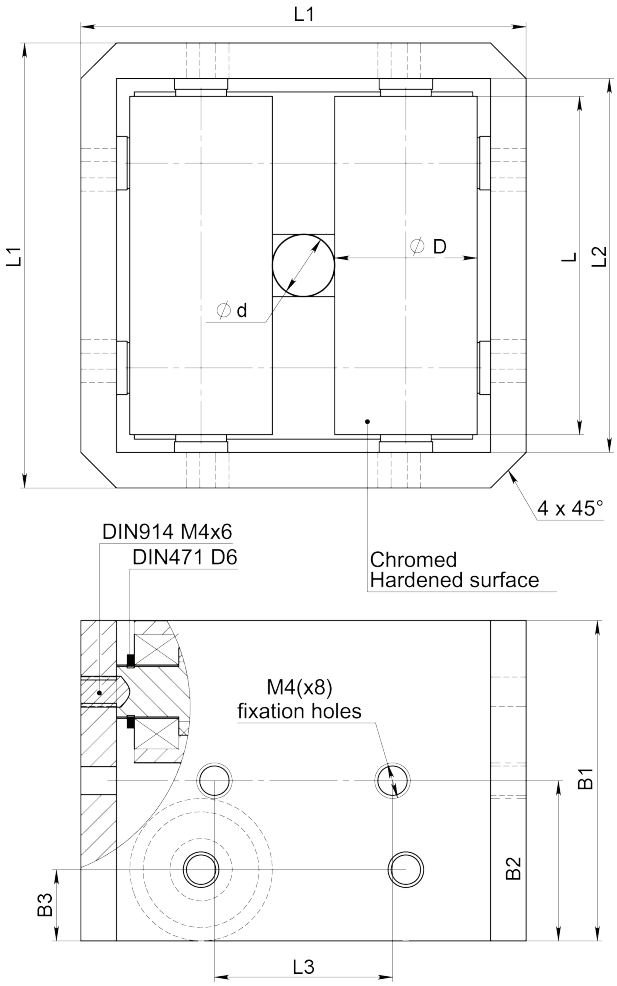

With Aluminium body



Article	Ød	ØD	L	L1	L2	L3	B1	B2	B3	Weight [kg]
07816*	7	16	38	50	42	20	36	18	8	0,285
11368*	6	12	31	40	32	18	29	14,5	8	0,135
11369*	4	8	21	30	22	16	20	10	5,5	0,05
11370	3,3	5,7	18	25	19	14	16	8	3,5	

Drawing No. 3-400956-00

* Stock item

Subec AB **Hesselmans Torg 5** **SE- 131 54 Nacka** **Sweden** **Phone: +46-8-88 46 33** **Email: info@subec.se** **Web: www.subec.se**

Copyright © 2026 Subec

NON-ADJUSTABLE ROLLER CROSS

Opening: 6-130mm

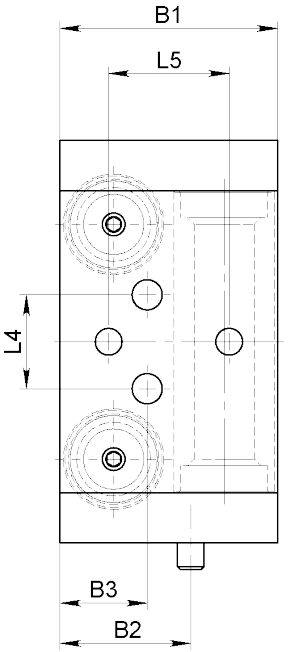

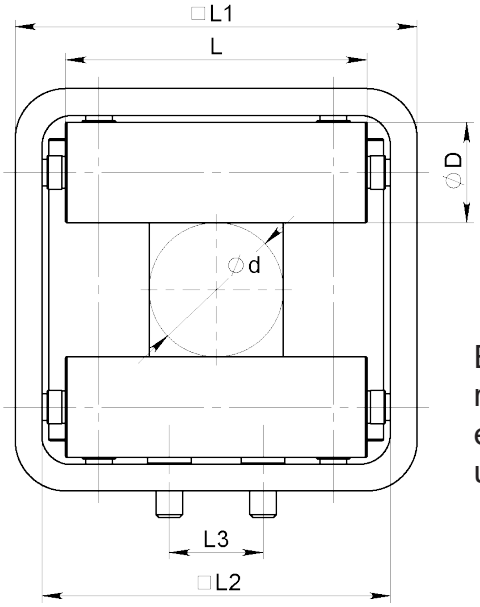

Executions with 2 or 3 rollers instead of 4 rollers are also available upon request

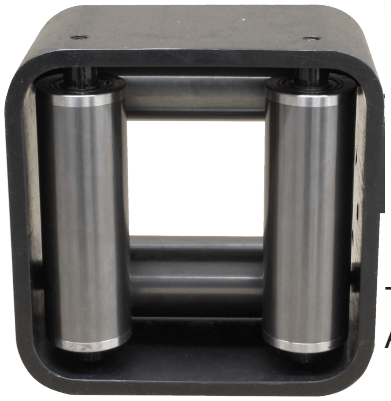

Tungsten Carbide
Article: 13021



Article: 00056

Article	Ød	ØD	L	L1	L2	L3	L4	L5	B1	B2	B3	Weight	Rollers
8718A*	6	25	60	80	68	-	36 (M10)	36 (M10)	54	-	-	1,7kg	
10908*	8	20	40	60	50	-	30 (M8)	30 (M8)	44	-	-	0,7kg	
10852*	13	25	60	80	68	-	36 (M10)	36 (M10)	54	-	-	1,5kg	
08441*	40	30	90	120	104	28	28 (Ø9)	36 (M10)	65	39	26	3kg	
00056*	60	20	100	120	108	40	40 (Ø7)	-	50	25	25	1,7kg	
7087A*	60	40	130	160	144	40	40 (M8)	-	90	45	45	7kg	
13021	60	40	130	160	144	40	40 (M8)	-	90	45	45	7kg	Tungsten Carbide
06862	80	20	120	150	138	40	40 (Ø7)	-	50	25	25		
09885	130	60	250	300	280	110	110 (Ø17)	-	130	80	50	27,5kg	

Drawing No. 3-400401-00

* Stock item

Subec AB **Hesselmans Torg 5** **SE- 131 54 Nacka** **Sweden** **Phone: +46-8-88 46 33** **Email: info@subec.se** **Web: www.subec.se**

Copyright © 2026 Subec

HEAVY DUTY ROLLER CROSS
FOR PLANETARY STRANDING MACHINE

Opening: 80mm

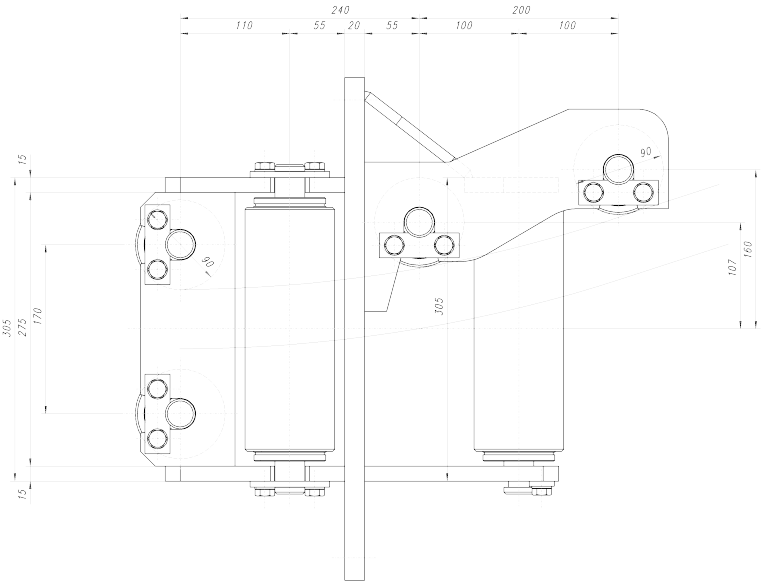

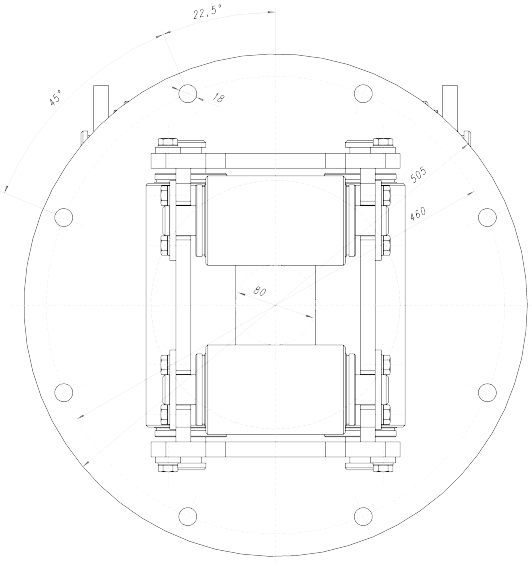



Article: 04157
Weight: 100kg

Drawing No. 3-400866-00

Subec AB **Hesselmans Torg 5** **SE- 131 54 Nacka** **Sweden** **Phone: +46-8-88 46 33** **Email: info@subec.se** **Web: www.subec.se**

Copyright © 2026 Subec

NON-ADJUSTABLE ROLLER CROSS FOR PLANETARY STRANDING MACHINE

Opening: 10mm

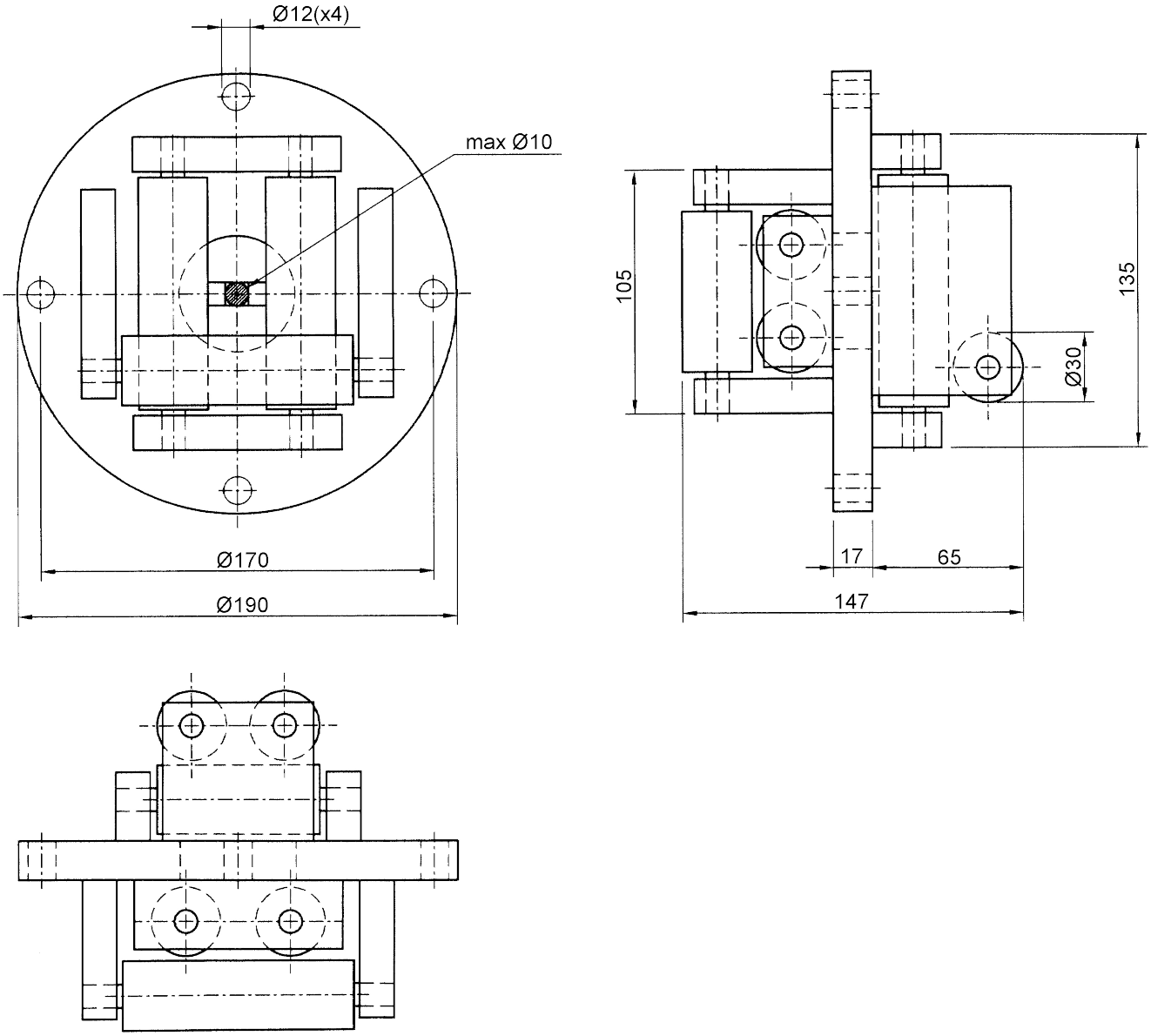

Article: 00070

Drawing No. 3-300118-00

Subec AB **Hesselmans Torg 5** **SE- 131 54 Nacka** **Sweden** **Phone: +46-8-88 46 33** **Email: info@subec.se** **Web: www.subec.se**

Copyright © 2026 Subec

NON-ADJUSTABLE ROLLER CROSS

Opening: 10, 20mm

Type A
Opening**:** 10mm
Rollers**Ø:** 30mm
Article: 00069
Weight: 3,1kg

Type B
Opening**:** 20mm
Rollers**Ø:** 25mm
Article: 00623*
Weight: 2,8kg

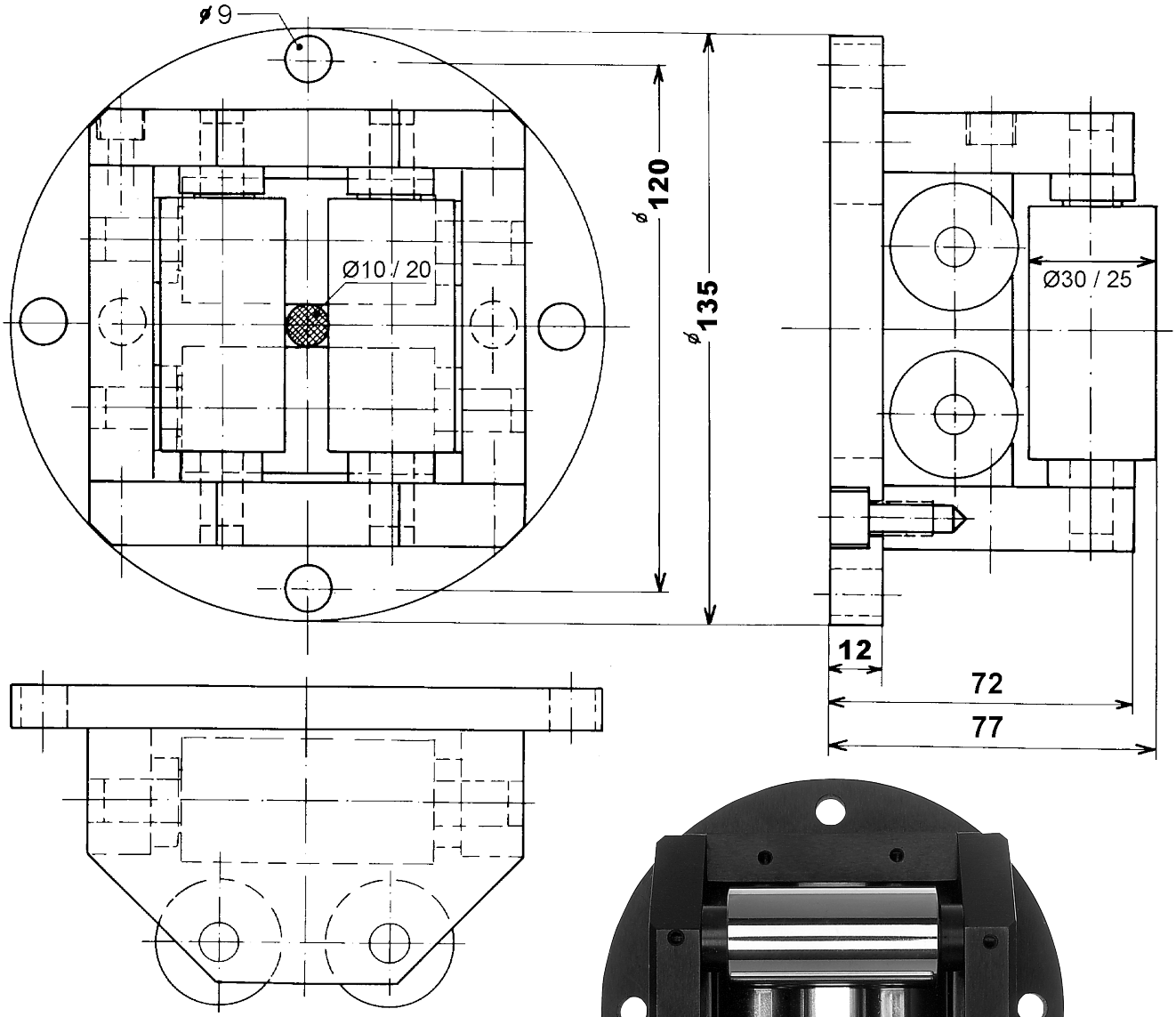

Drawing No. 3-400074-01

* Stock item

Subec AB **Hesselmans Torg 5** **SE- 131 54 Nacka** **Sweden** **Phone: +46-8-88 46 33** **Email: info@subec.se** **Web: www.subec.se**

Copyright © 2026 Subec

NON-ADJUSTABLE ROLLER CROSS

Opening: 15-20mm

Rollers:

Standard: HRX (Surface hardened + chromium coated)

Option: Various Plastics, Stainless

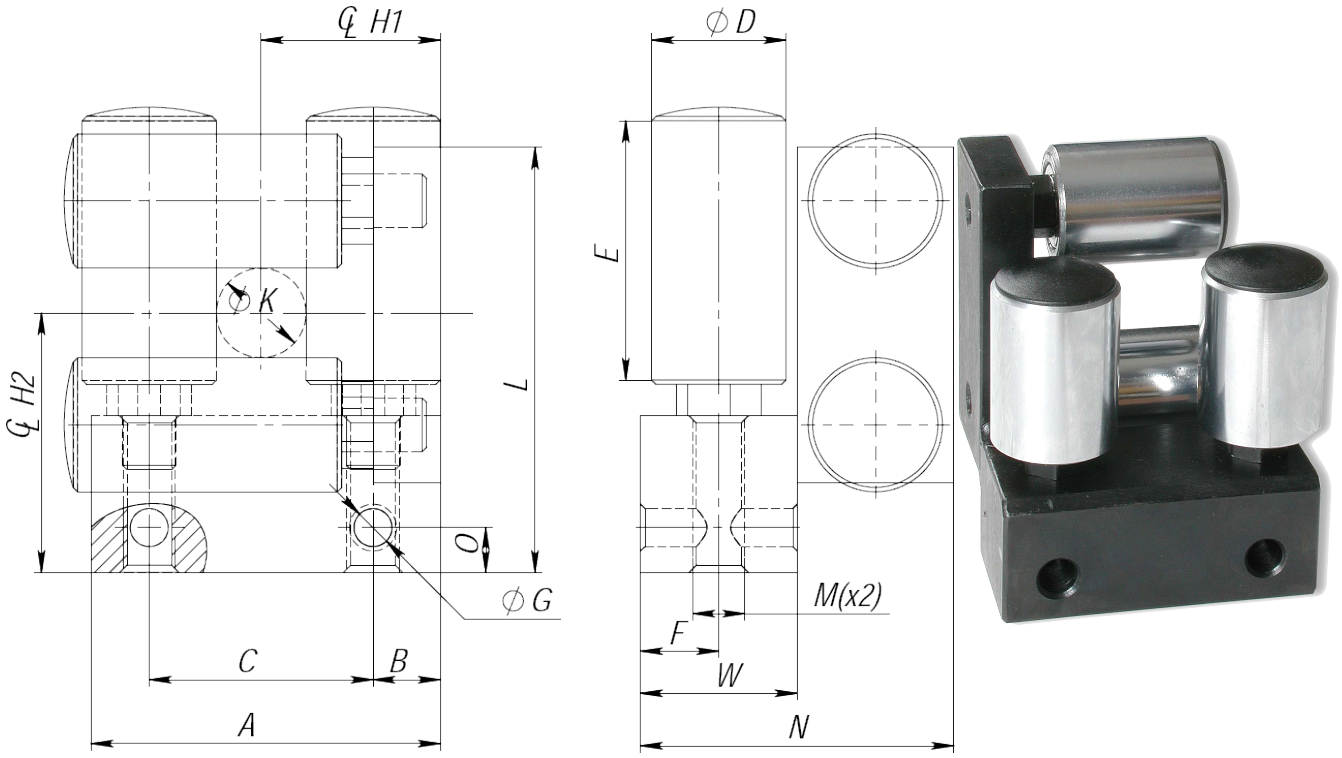

Article	A	B	C	D	E	F	G	H1	H2	K	L	M	N	O	W	Weight [kg]
05693*	68	14	40	25	40	15	8,5	34	49	15	83	M12	60	7	30	1,15
05081*	78	15	50	30	60	17,5	8,5	40	58	20	96	M12	70	10	35	1,8
04741*	78	15	50	30	40	17,5	8,5	40	58	20	96	M12	70	10	35	1,35

Other dimensions on request

Drawing No. 3-400403-00

* Stock item

Subec AB **Hesselmans Torg 5** **SE- 131 54 Nacka** **Sweden** **Phone: +46-8-88 46 33** **Email: info@subec.se** **Web: www.subec.se**

Copyright © 2026 Subec

NON-ADJUSTABLE ROLLER CROSS

Opening: 20, 80mm

Type A
Opening: 20mm
Article: 00554*
Weight: 33,4kg

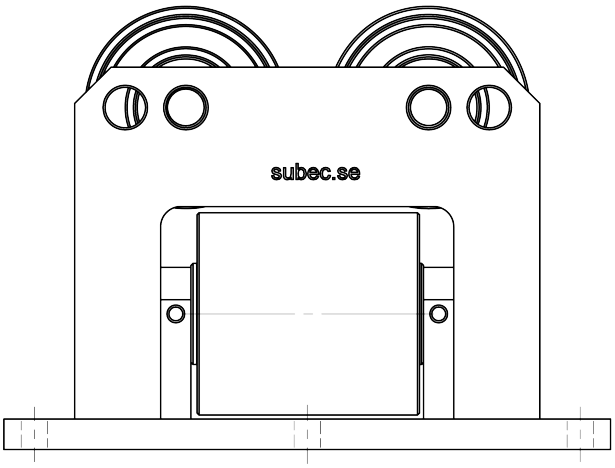

Type B
Opening: 80mm
Article: 05517
Weight: 33,3kg

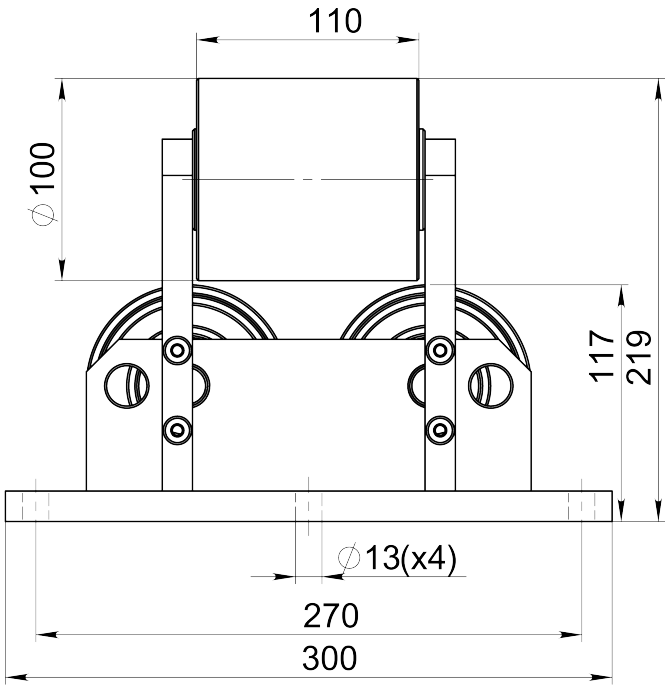

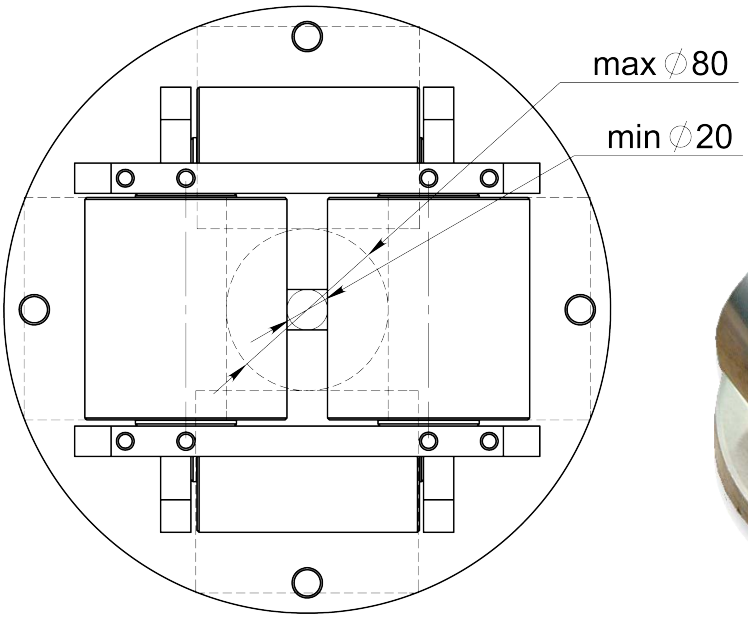



Drawing No. 3-300442-00

* Stock item

Subec AB **Hesselmans Torg 5** **SE- 131 54 Nacka** **Sweden** **Phone: +46-8-88 46 33** **Email: info@subec.se** **Web: www.subec.se**

Copyright © 2026 Subec

NON-ADJUSTABLE ROLLER CROSS

Opening: 30mm

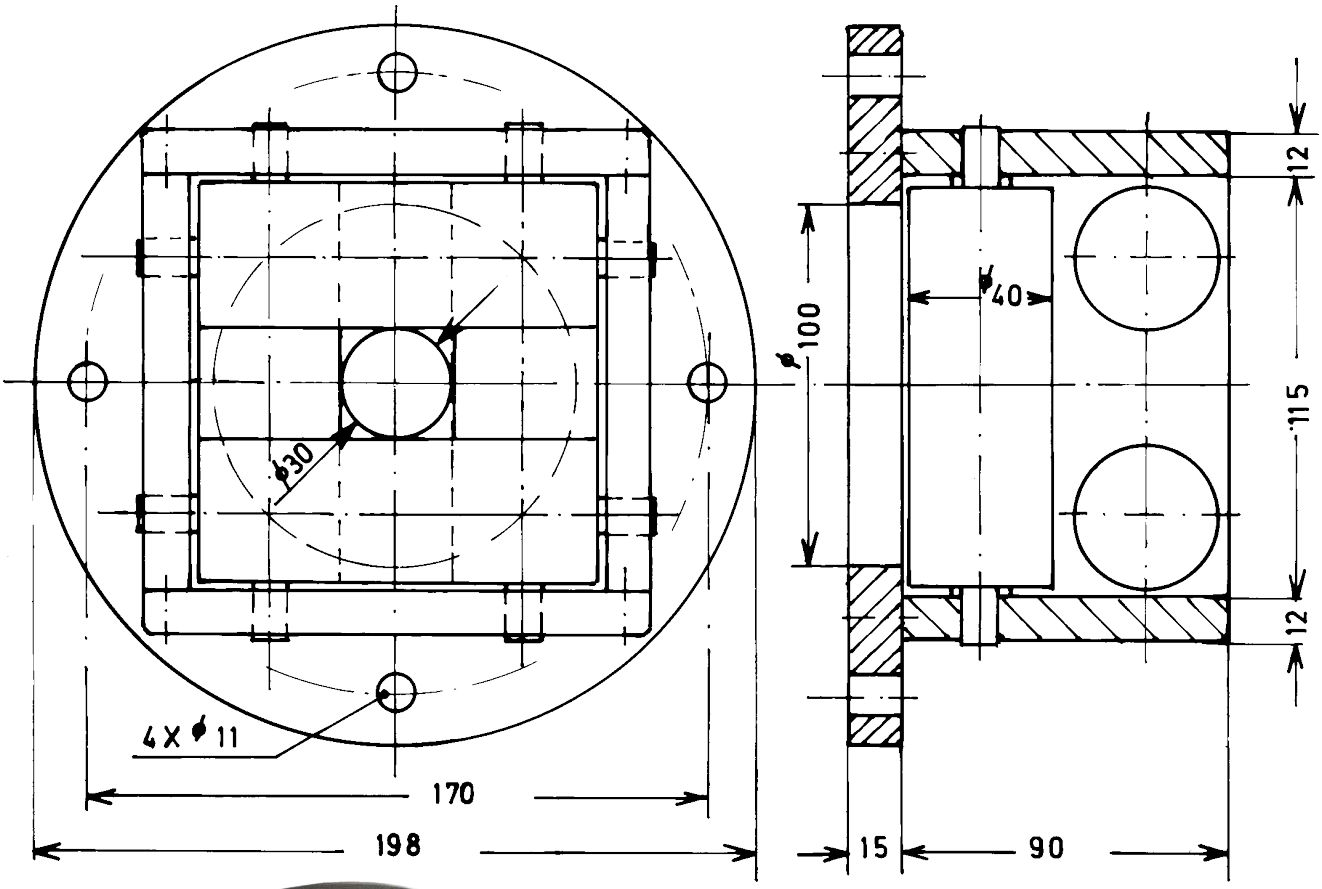

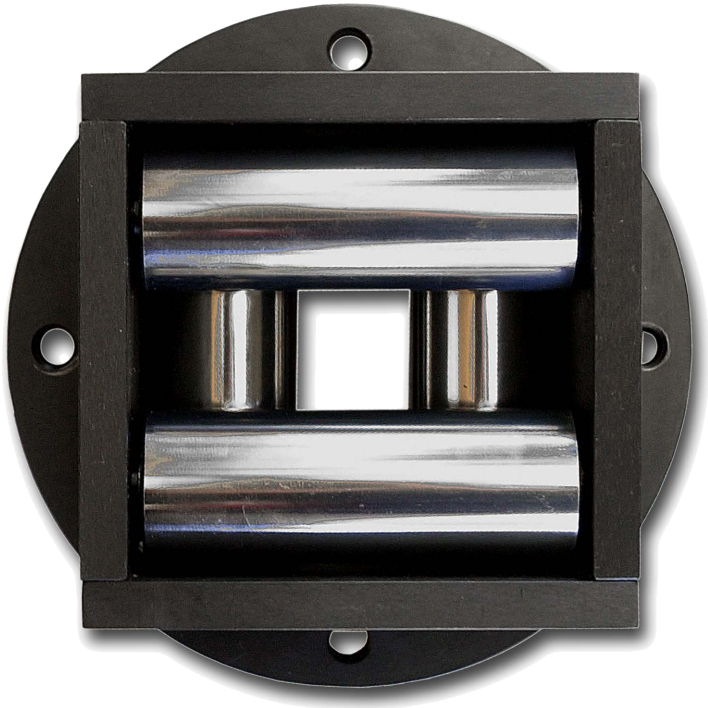



Article: 00128*
Weight: 9,3kg

Drawing No. 3-300119-00

* Stock item

Subec AB **Hesselmans Torg 5** **SE- 131 54 Nacka** **Sweden** **Phone: +46-8-88 46 33** **Email: info@subec.se** **Web: www.subec.se**

Copyright © 2026 Subec

NON-ADJUSTABLE ROLLER CROSS

Opening: 30mm

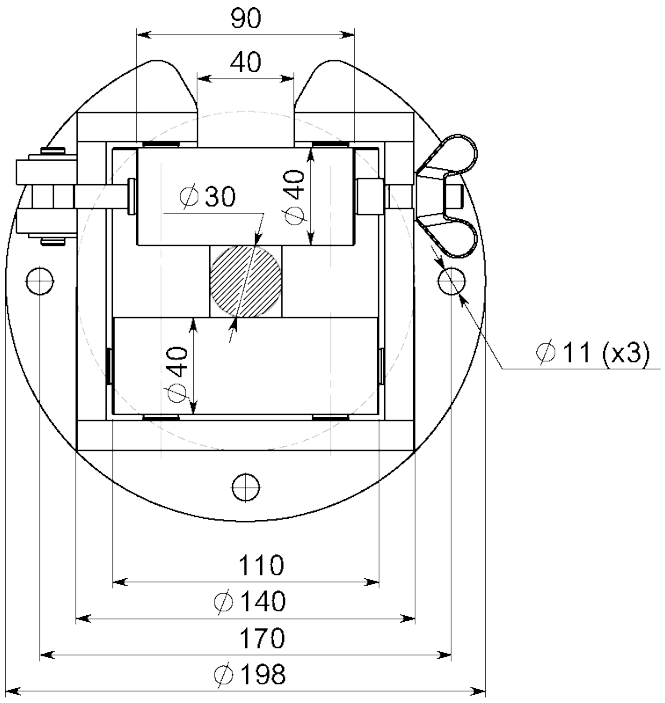

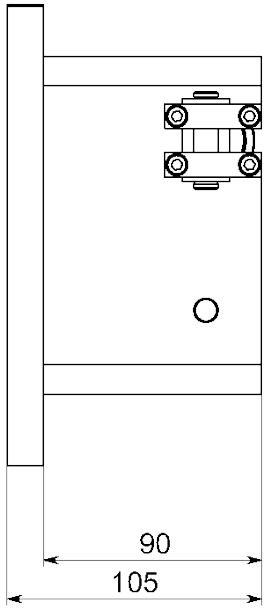

Article: 09122
Right-Left

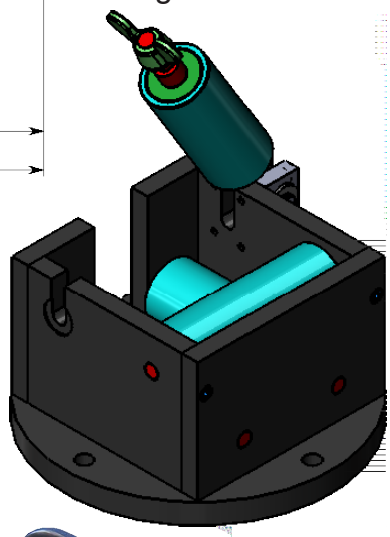

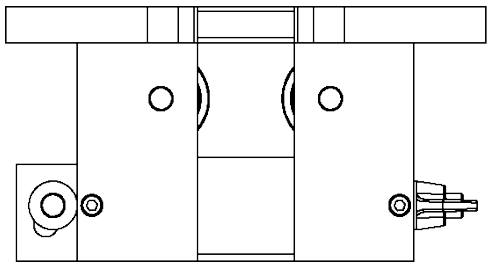

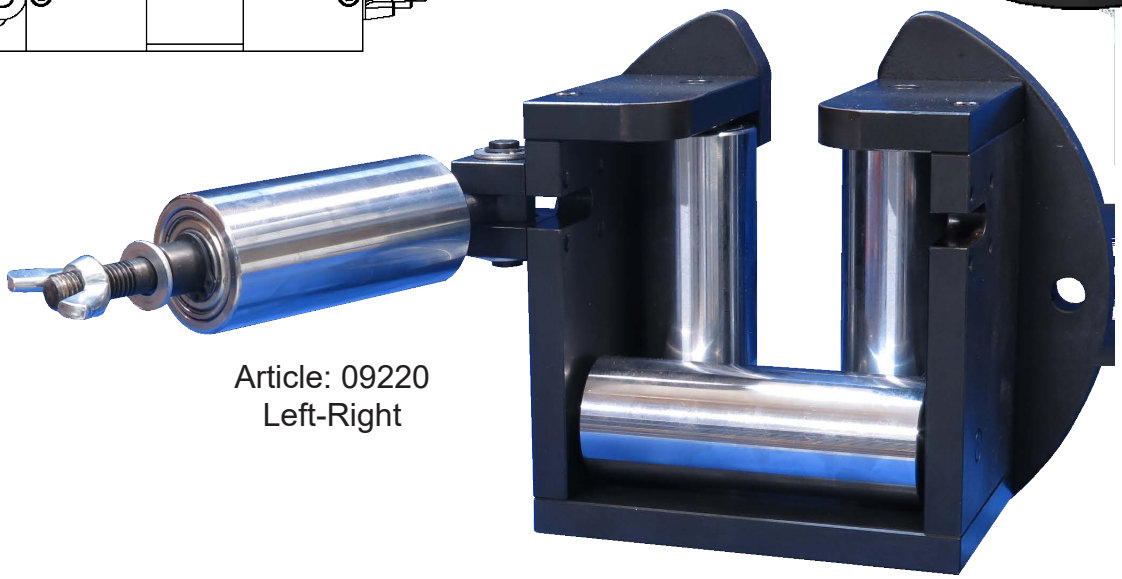

Article: 09220
Left-Right

Drawing No. 3-300119-00

Subec AB **Hesselmans Torg 5** **SE- 131 54 Nacka** **Sweden** **Phone: +46-8-88 46 33** **Email: info@subec.se** **Web: www.subec.se**

Copyright © 2026 Subec

NON-ADJUSTABLE ROLLER CROSS

Opening: 40mm

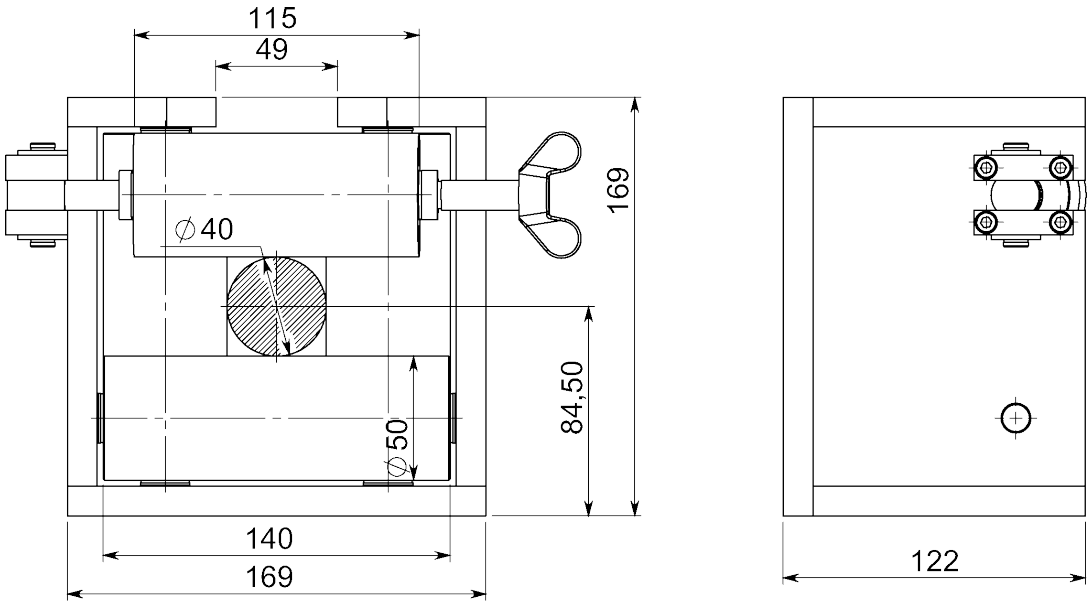

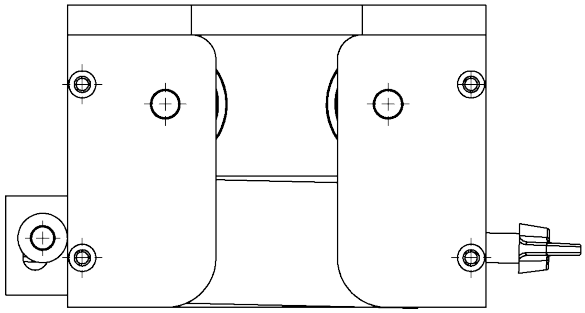





Option: With Stand
Article: 11457A

Article: 11457A
Right-Left

Article: 9950A
Left-Right
Weight: 14kg

Drawing No. 3-300119-00

Subec AB **Hesselmans Torg 5** **SE- 131 54 Nacka** **Sweden** **Phone: +46-8-88 46 33** **Email: info@subec.se** **Web: www.subec.se**

Copyright © 2026 Subec

NON-ADJUSTABLE ROLLER CROSS

Opening: 220mm



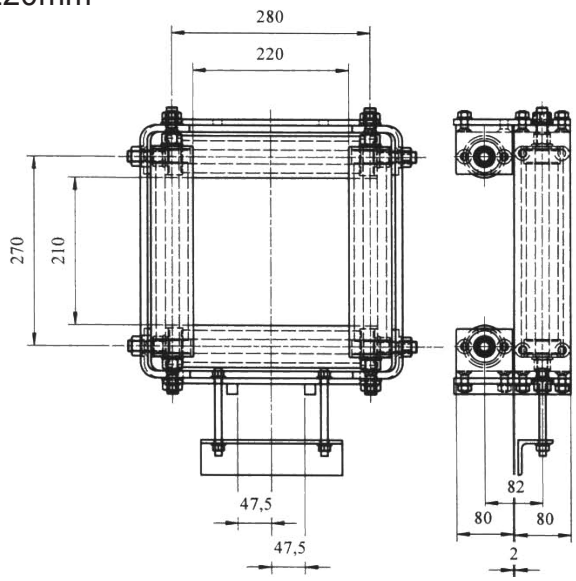

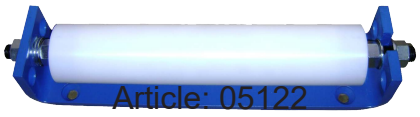

Article: 05122



Article: 07675



Article: 05121

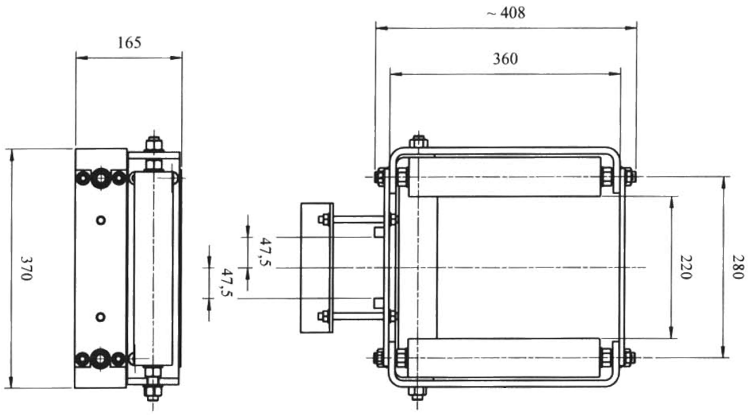



Article: 05313

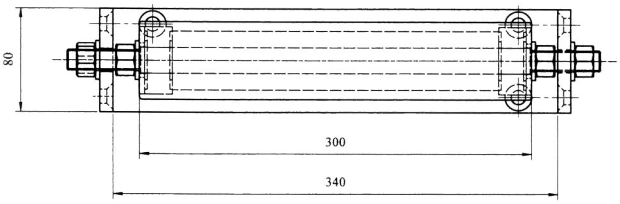

Drawing No. 3-400777-00

Subec AB **Hesselmans Torg 5** **SE- 131 54 Nacka** **Sweden** **Phone: +46-8-88 46 33** **Email: info@subec.se** **Web: www.subec.se**

Copyright © 2026 Subec

NON-ADJUSTABLE ROLLER CROSS

Opening: 300mm

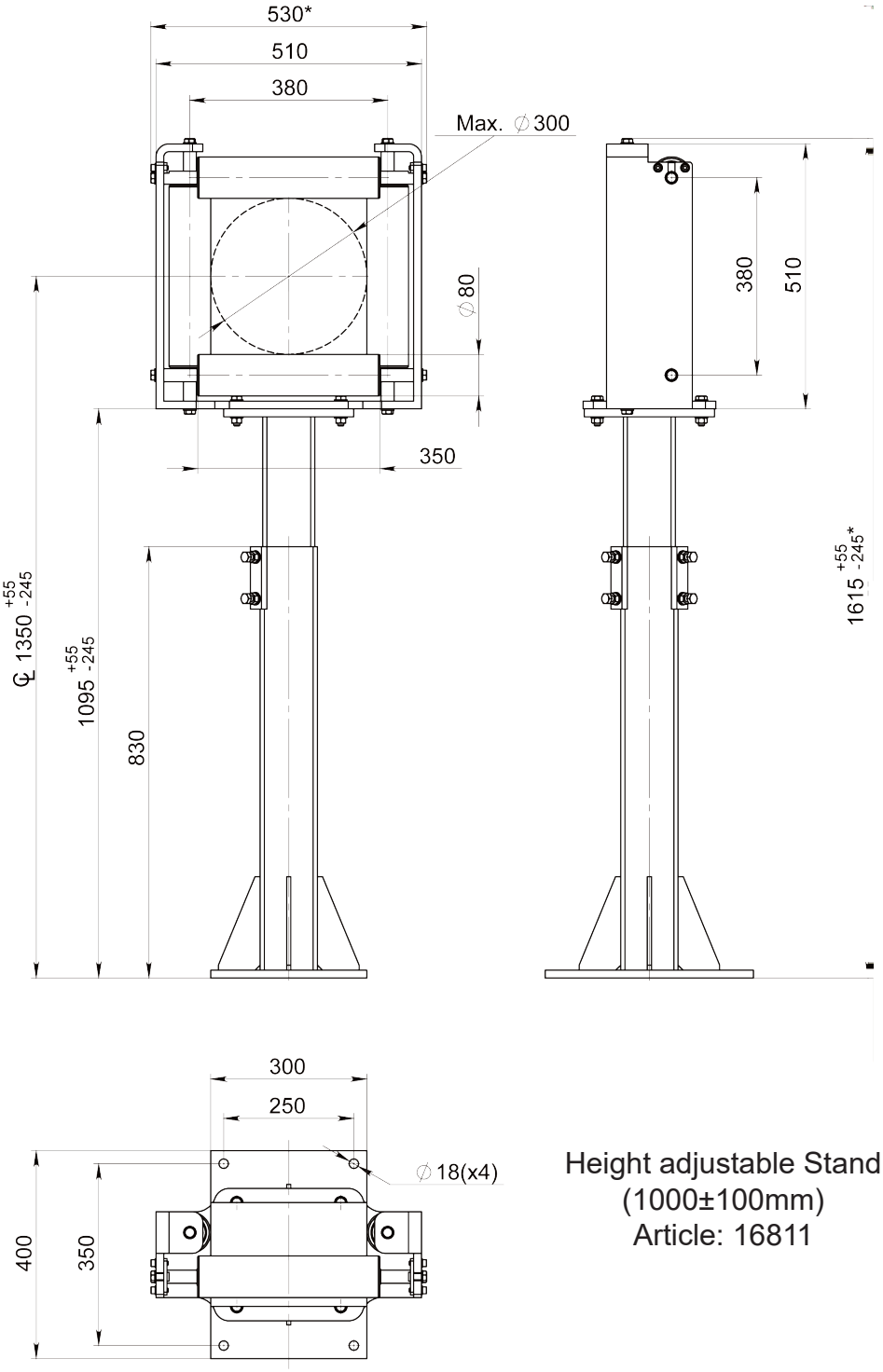

Height adjustable Stand
(1000±100mm)
Article: 16811

Non-Adjustable roller cross
Article: 16799



Drawing No. 3-400777-00

Subec AB **Hesselmans Torg 5** **SE- 131 54 Nacka** **Sweden** **Phone: +46-8-88 46 33** **Email: info@subec.se** **Web: www.subec.se**

Copyright © 2026 Subec

NON-ADJUSTABLE ROLLER CROSS

Opening: 250mm

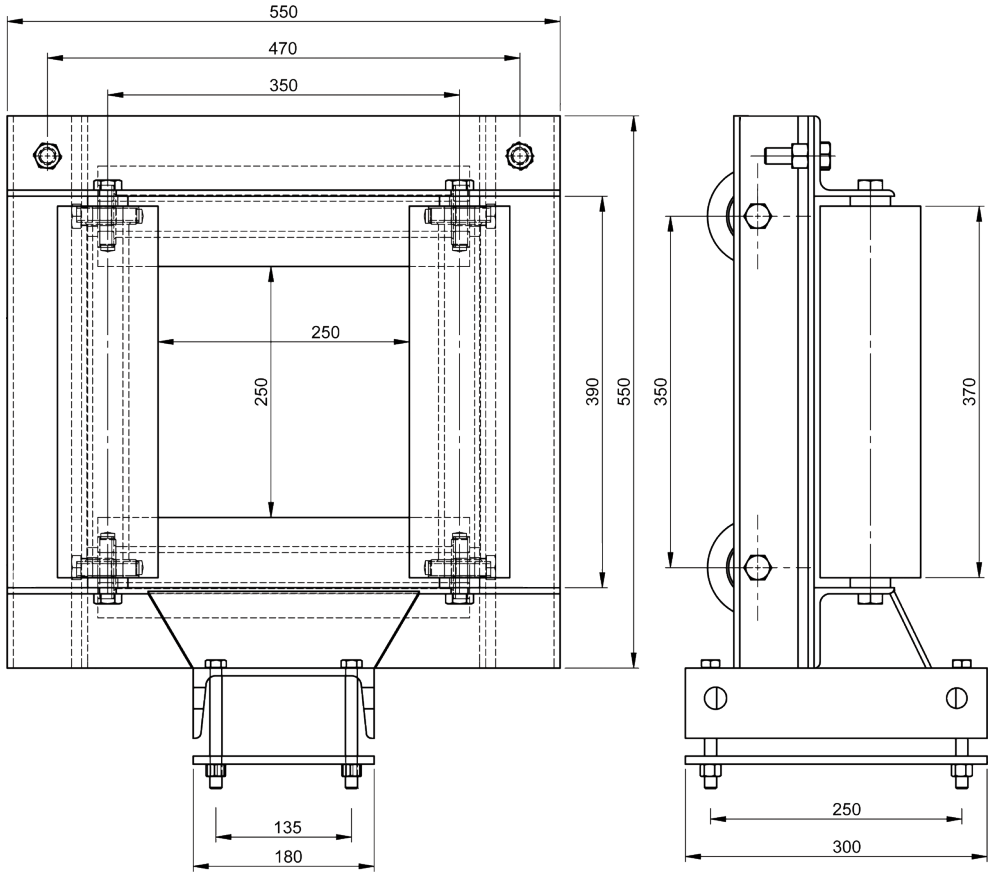





Drawing No. 3-400778-00

Subec AB **Hesselmans Torg 5** **SE- 131 54 Nacka** **Sweden** **Phone: +46-8-88 46 33** **Email: info@subec.se** **Web: www.subec.se**

Copyright © 2026 Subec

NON-ADJUSTABLE ROLLER CROSS

Opening: 400mm

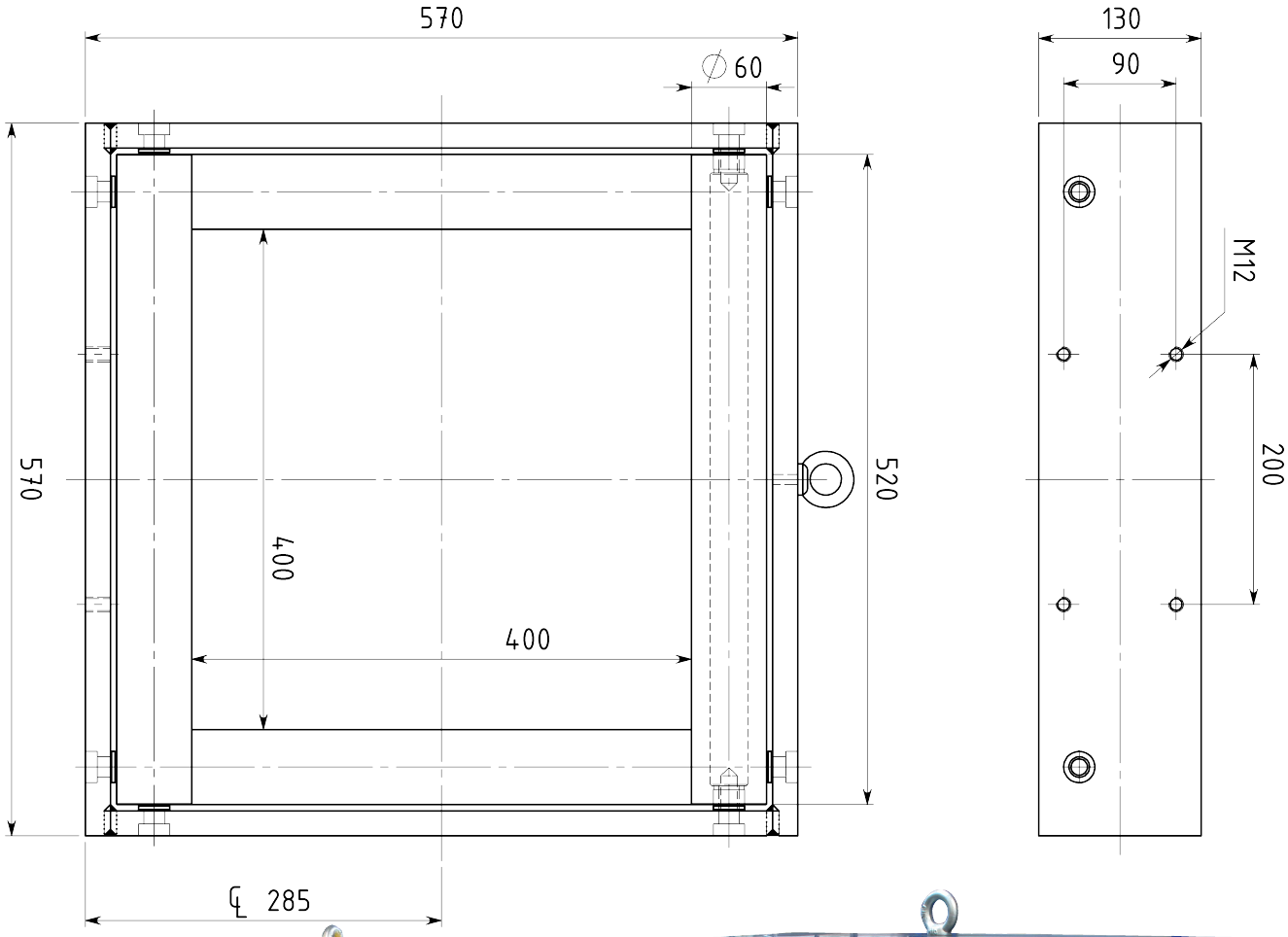



Article: 07674
Option: With POM Rollers



Article: 02248
Weight: 75kg

Drawing No. 3-400551-00

Subec AB **Hesselmans Torg 5** **SE- 131 54 Nacka** **Sweden** **Phone: +46-8-88 46 33** **Email: info@subec.se** **Web: www.subec.se**

Copyright © 2026 Subec

ADJUSTABLE ROLLER CROSS, 45º

Product range: Ø 1-40mm

Rollers:

Standard: HRX (Surface hardened + chromium coated)

Option: Various Plastics, Stainless

Article: 13031*
Weight: 1,5kg

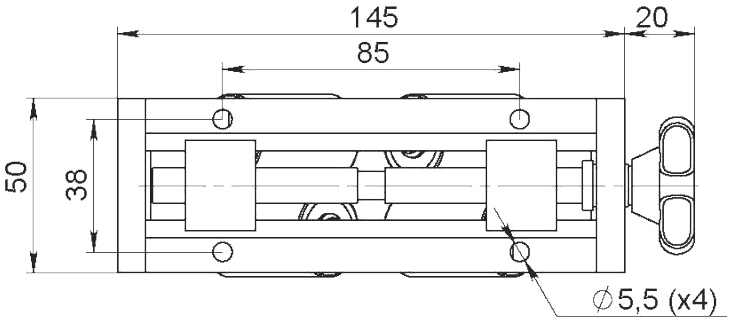

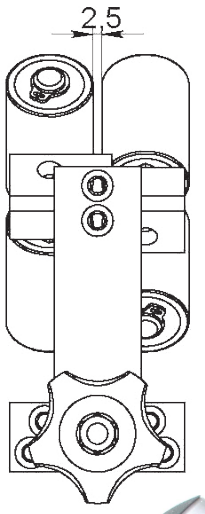

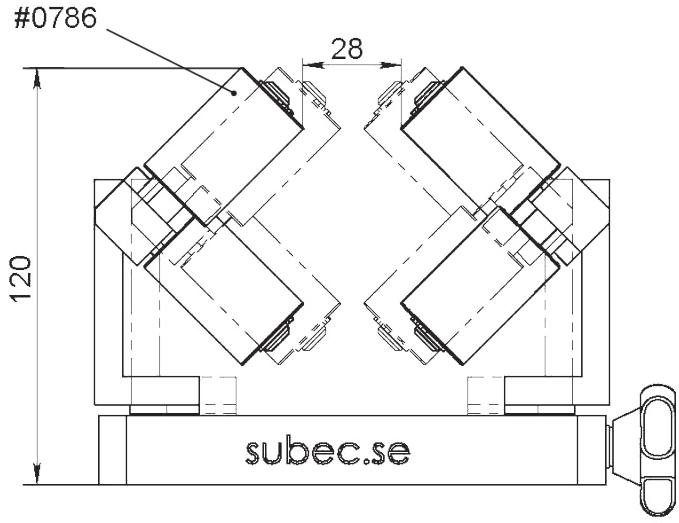

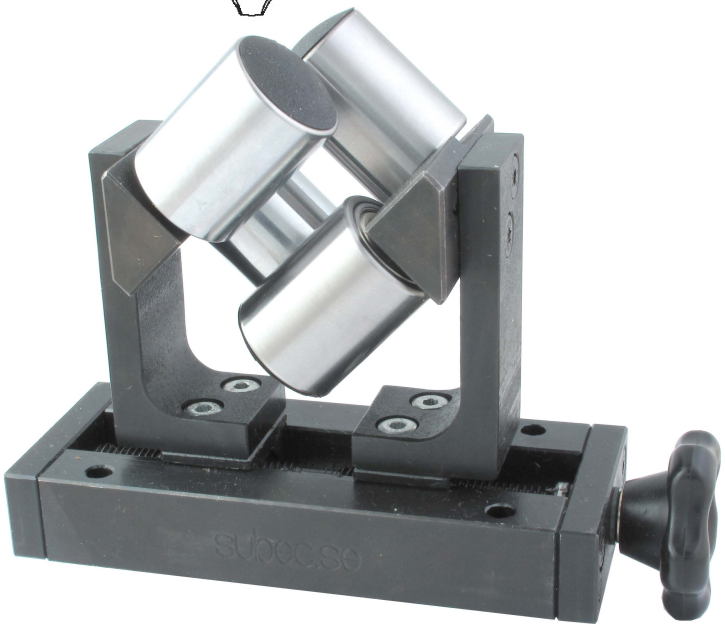

Article: 10924
Option: Stainless Steel



Drawing No. 3-400327-00

* Stock item

Subec AB **Hesselmans Torg 5** **SE- 131 54 Nacka** **Sweden** **Phone: +46-8-88 46 33** **Email: info@subec.se** **Web: www.subec.se**

Copyright © 2026 Subec

ADJUSTABLE ROLLER CROSS, 45º

Product range: Ø0,6-60mm, Ø50-120mm

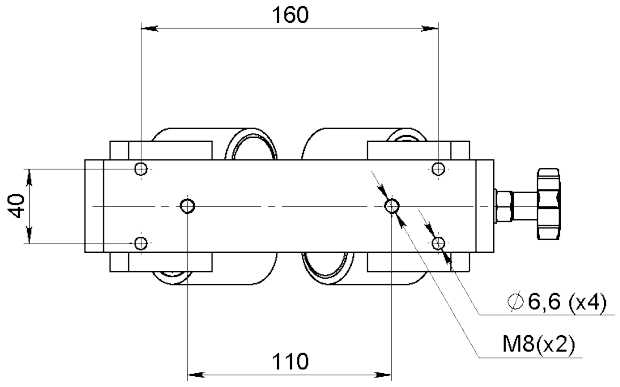

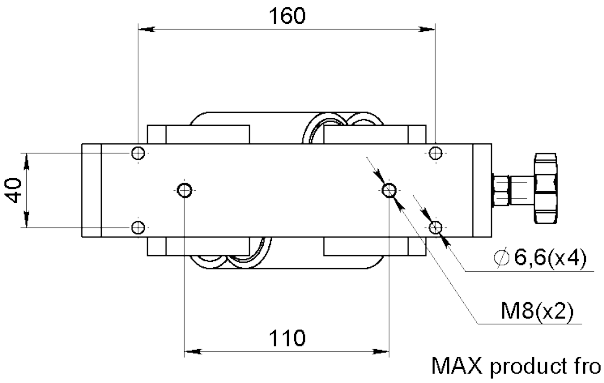

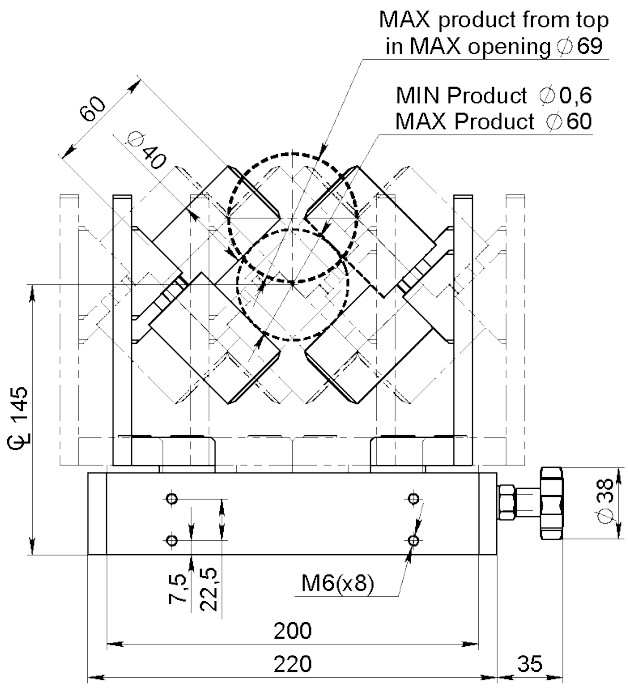

Article: 05946A*
Weight: 7,5kg

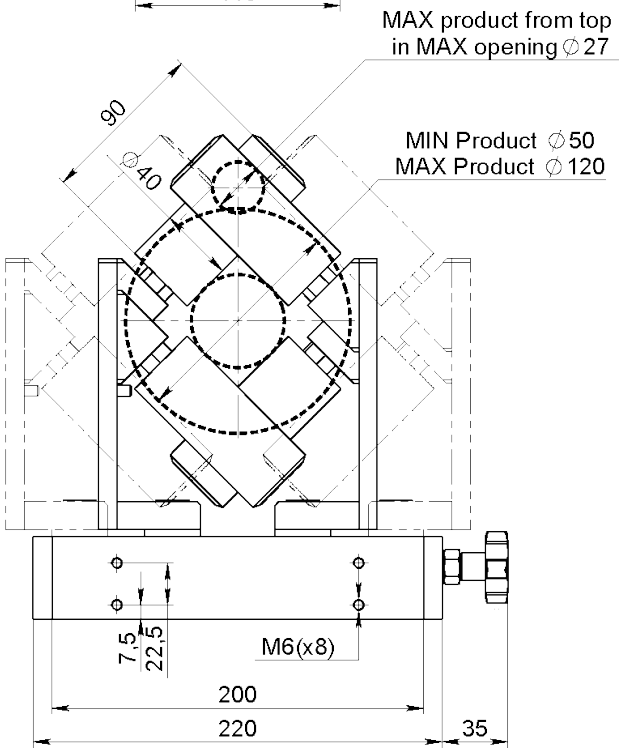

Article: 05947A
Weight: 7,8kg

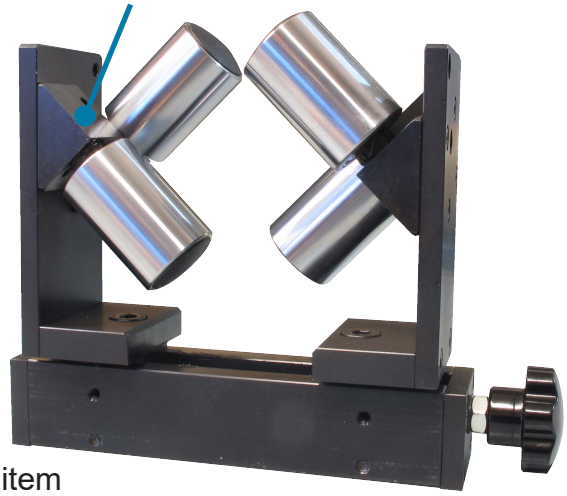

Option: Available with a Blue Zinc coat
Article: 11400 for Ø0,6-60mm

Drawing No. 3-300437-04

* Stock item

Subec AB **Hesselmans Torg 5** **SE- 131 54 Nacka** **Sweden** **Phone: +46-8-88 46 33** **Email: info@subec.se** **Web: www.subec.se**

Copyright © 2026 Subec

ADJUSTABLE ROLLER CROSS, 45º

Max Opening: 70mm

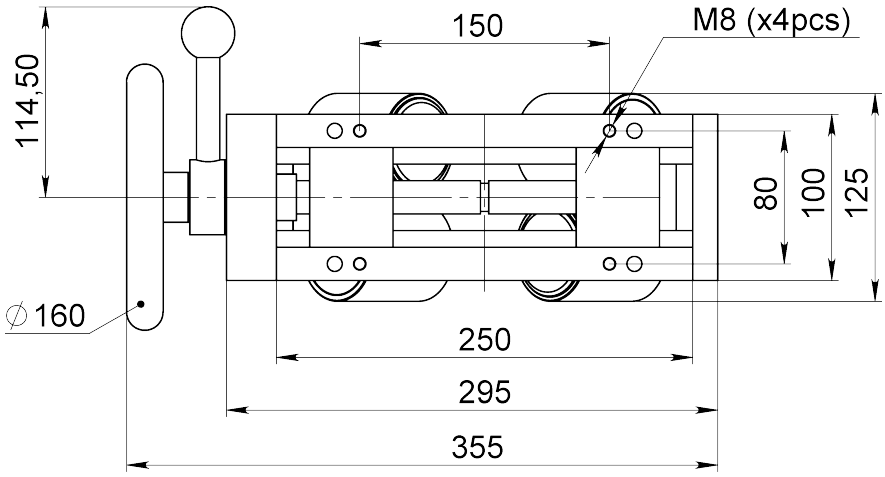

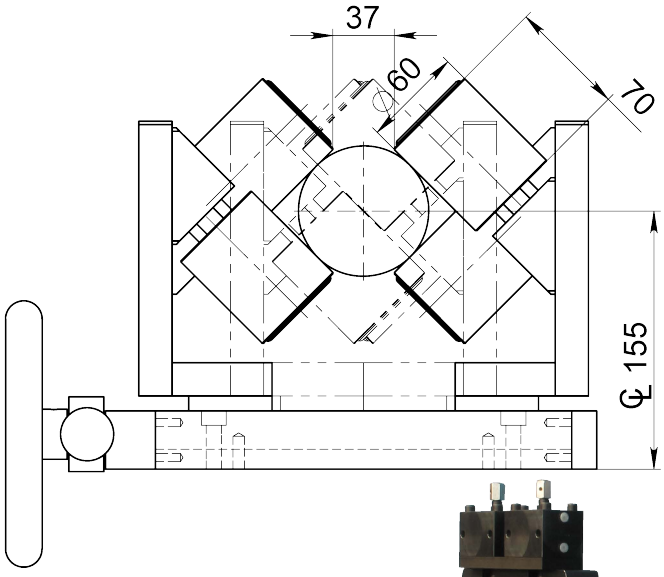

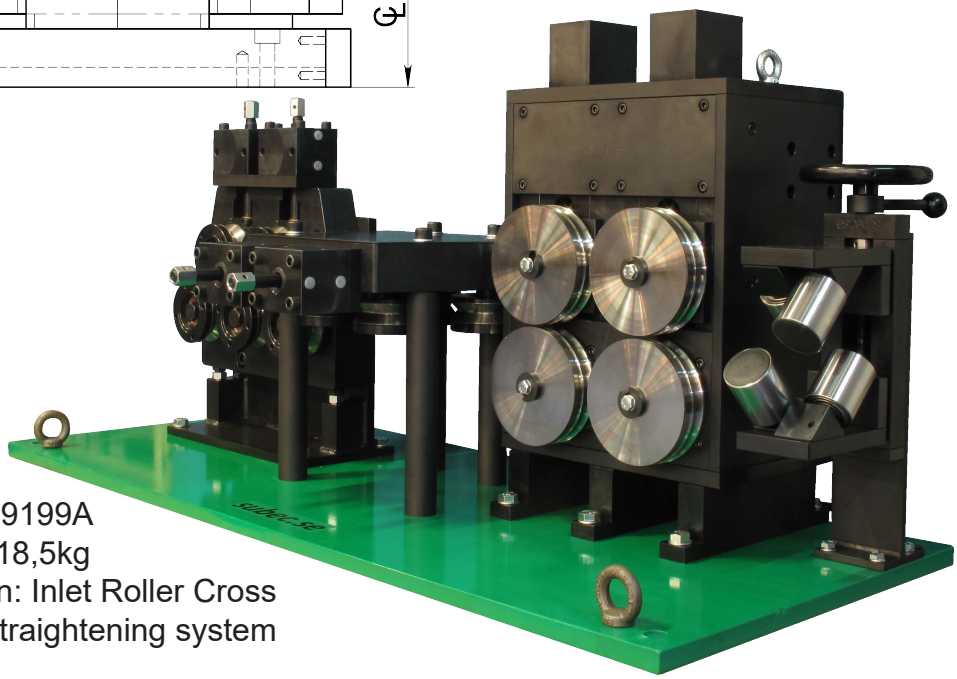

Article: 09199A
Weight: 18,5kg
Example of application: Inlet Roller Cross for double drive and straightening system

Drawing No. 3-400327-00

Subec AB **Hesselmans Torg 5** **SE- 131 54 Nacka** **Sweden** **Phone: +46-8-88 46 33** **Email: info@subec.se** **Web: www.subec.se**

Copyright © 2026 Subec

ADJUSTABLE ROLLER CROSS, 45º

Max Opening: 120mm

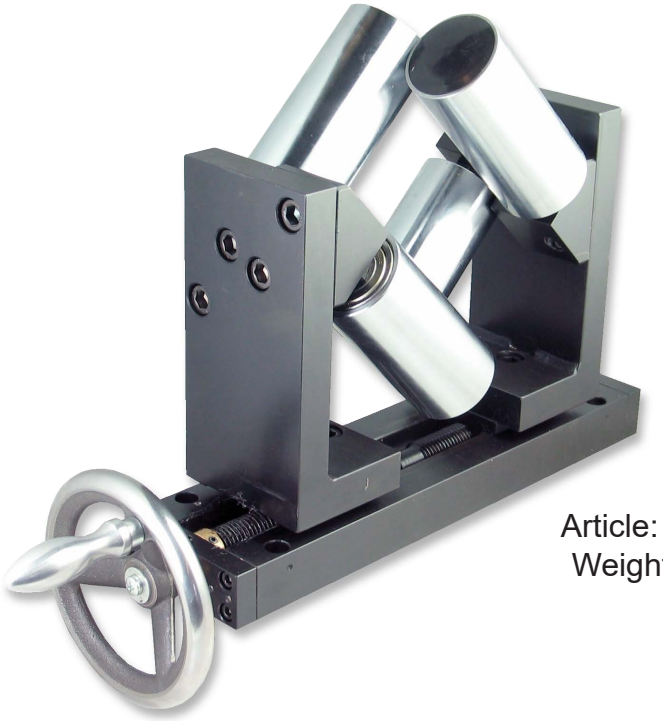

Article: 00767*
Weight: 26kg

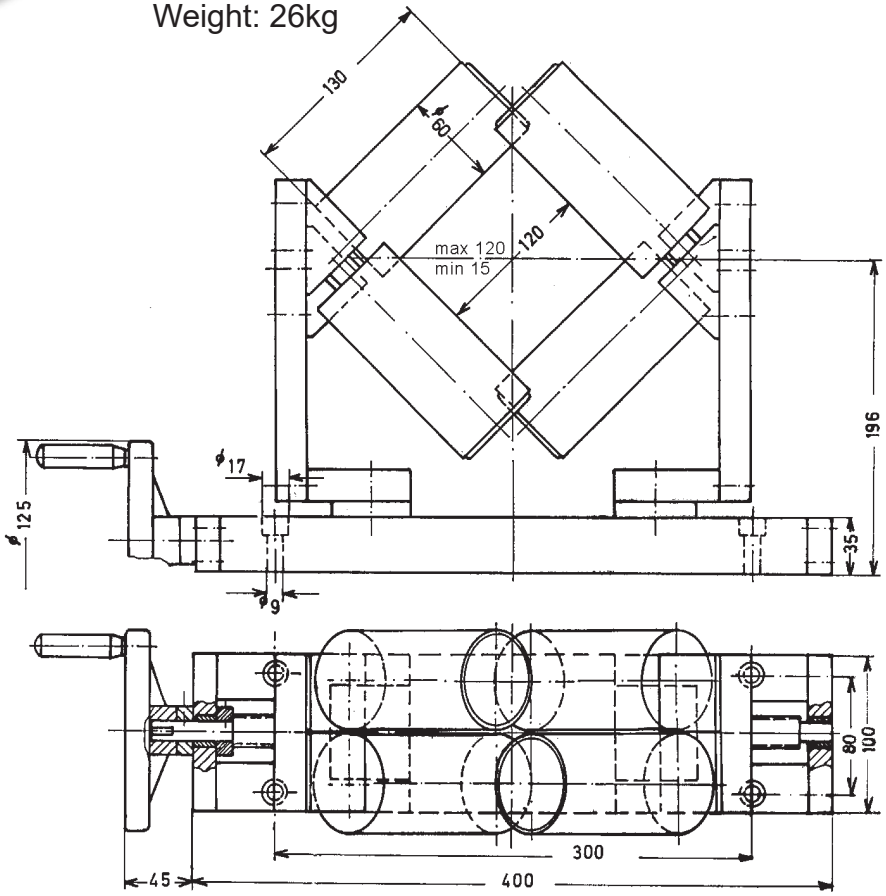

Drawing No. 3-400327-00

* Stock item

Subec AB **Hesselmans Torg 5** **SE- 131 54 Nacka** **Sweden** **Phone: +46-8-88 46 33** **Email: info@subec.se** **Web: www.subec.se**

Copyright © 2026 Subec

ADJUSTABLE ROLLER CROSS, 45º

Product range: Ø 40-200mm

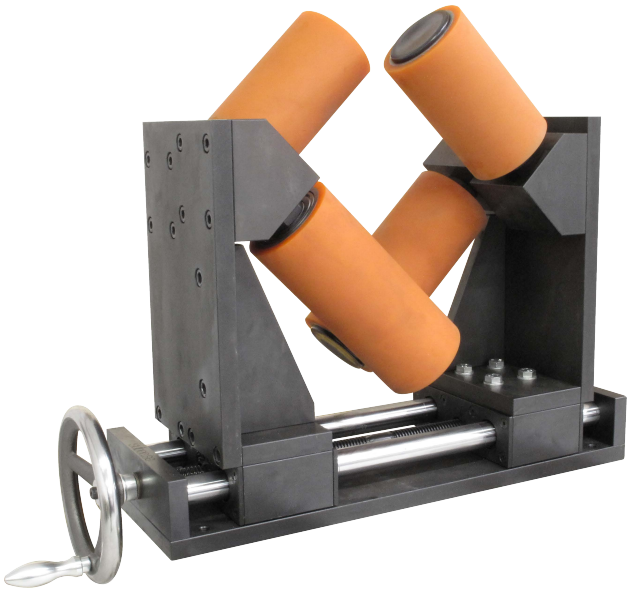

With PU Shore 80A Rollers
Article: 12033

Heavy duty design
Article: 11390A
Weight: 120kg



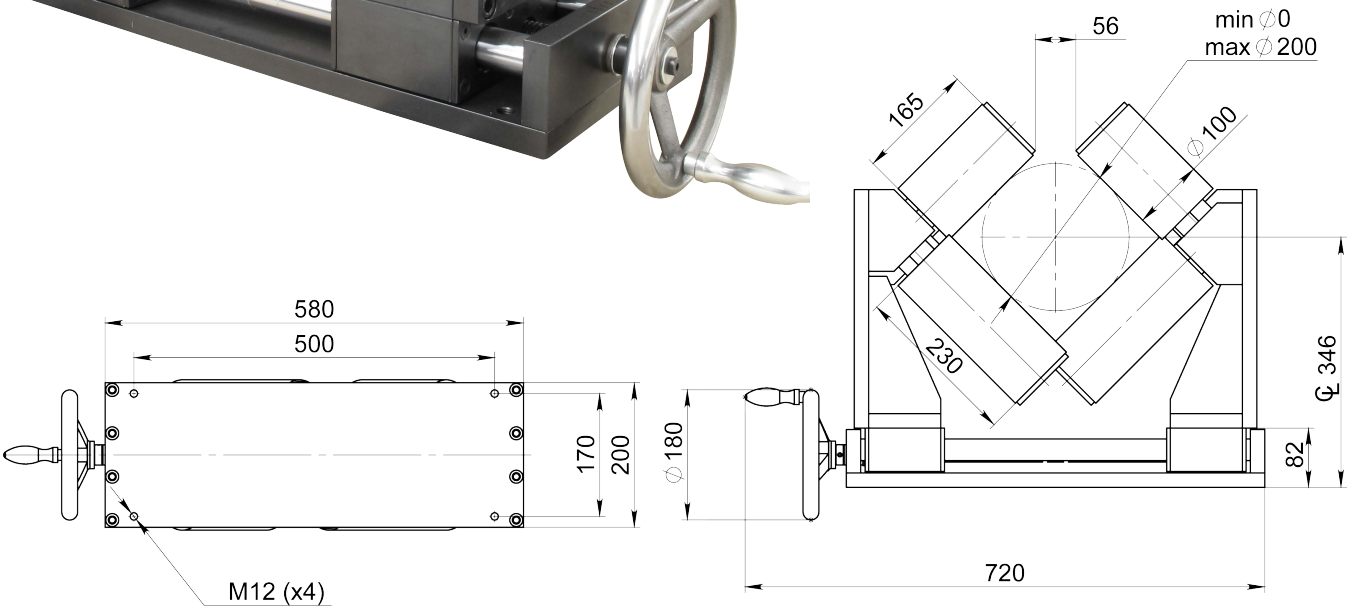

Drawing No. 3-401284-00

Subec AB **Hesselmans Torg 5** **SE- 131 54 Nacka** **Sweden** **Phone: +46-8-88 46 33** **Email: info@subec.se** **Web: www.subec.se**

Copyright © 2026 Subec

ADJUSTABLE ROLLER CROSS, 45º

Rollers:

Standard: HRX (Surface hardened + chromium coated)

Option: Various Plastics, Stainless

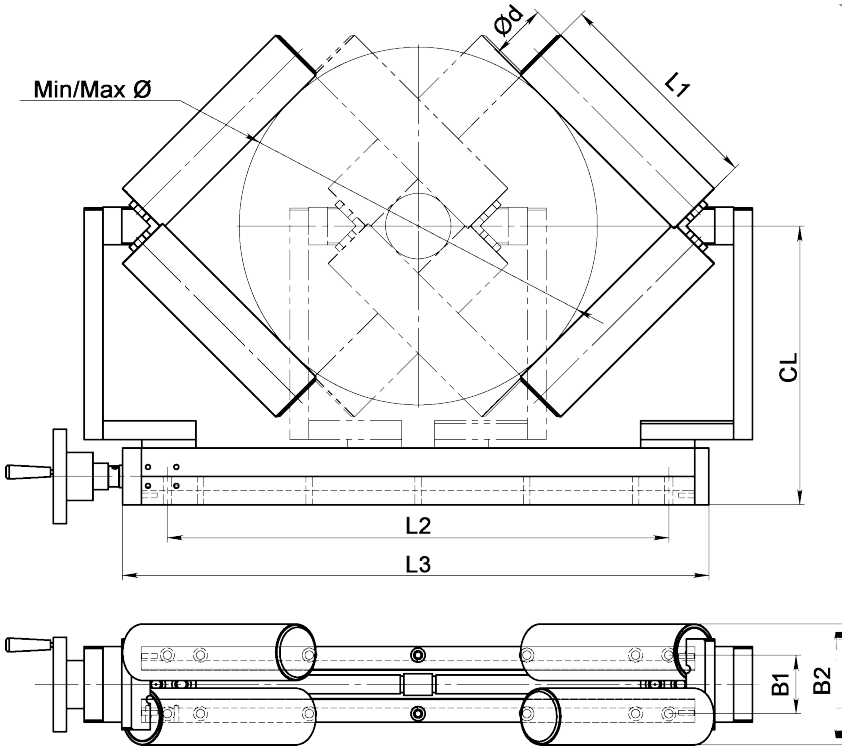

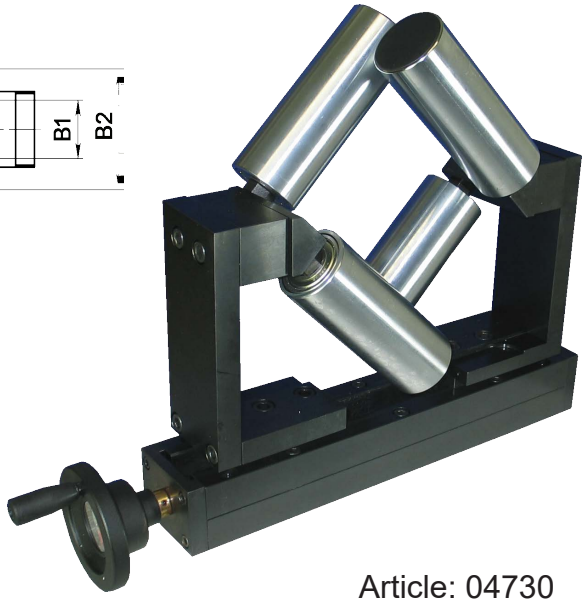

Article: 04730

Article	Ød	L1	L2	L3	B1	B2	CL	Min/Max Ø	Weight [kg]
03887	60	160	340	420	62	128	240	20-200	32
04729A	60	180	340	580	62	128	260	20-290	38
04730A	60	230	340	620	62	128	295	70-370	42
10251B	100	230	340	620	62	210	320	40-320	60

Drawing No. 3-400697-01

Subec AB **Hesselmans Torg 5** **SE- 131 54 Nacka** **Sweden** **Phone: +46-8-88 46 33** **Email: info@subec.se** **Web: www.subec.se**

Copyright © 2026 Subec

ROTATING SPRINGLOADED 3-POINT GUIDE

Max Opening: 38mm

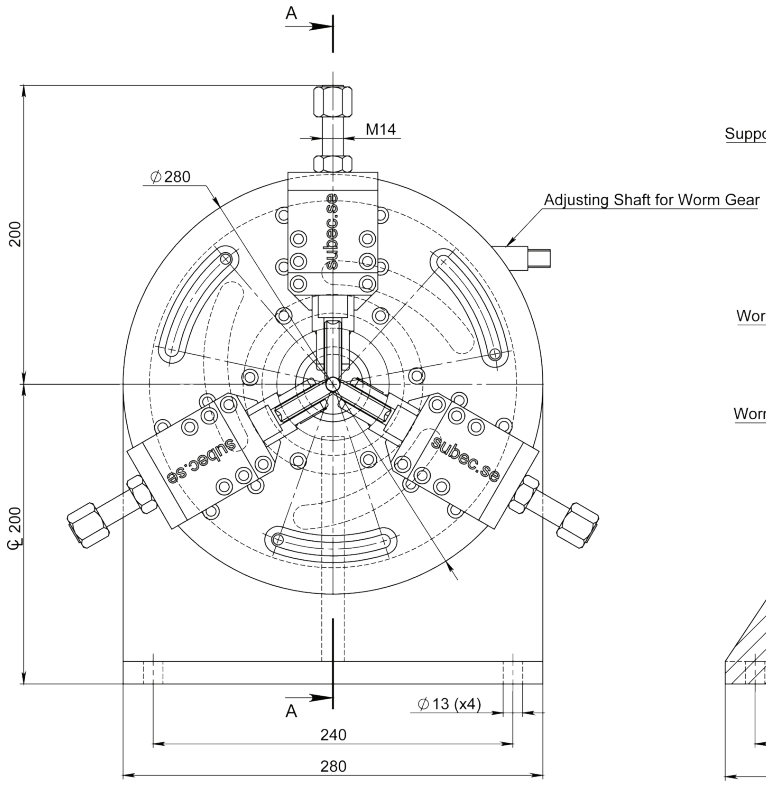

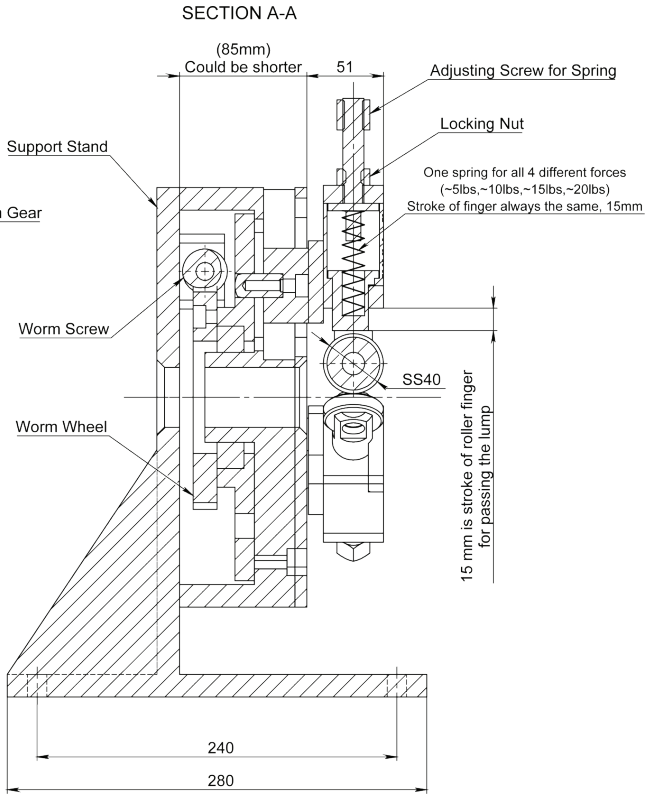

Article: 10486
Weight: 50,5kg

Stationary Execution
Article: 01228

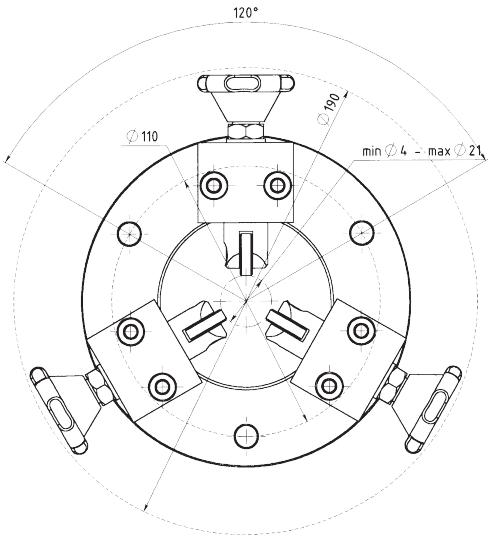



Drawing No. 3-401238-00

Subec AB **Hesselmans Torg 5** **SE- 131 54 Nacka** **Sweden** **Phone: +46-8-88 46 33** **Email: info@subec.se** **Web: www.subec.se**

Copyright © 2026 Subec

INDIVIDUAL ADJUSTABLE ROLLER CROSS

Max Opening: 25mm

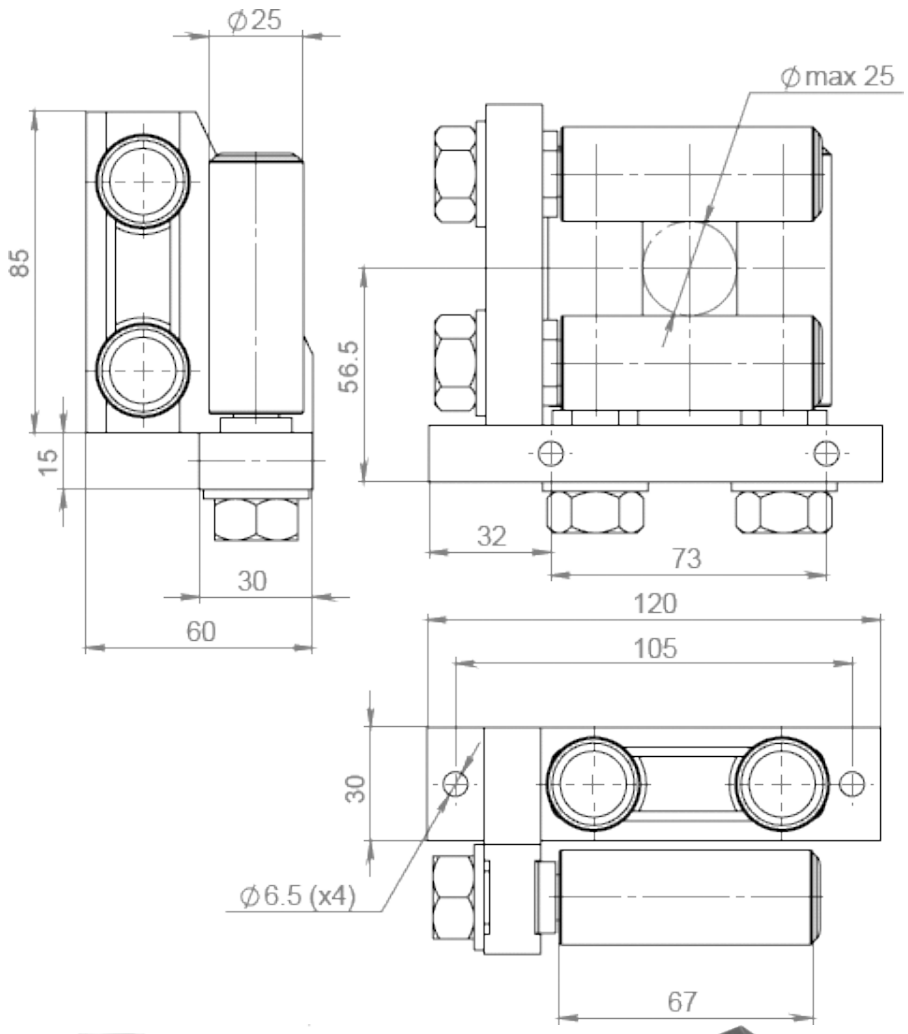

Roller Type
Ø25 L67 Rollers
Article: 5557





Article: 02247A*
Weight: 1,6kg

Drawing No. 3-400431-01

Subec AB **Hesselmans Torg 5** **SE- 131 54 Nacka** **Sweden** **Phone: +46-8-88 46 33** **Email: info@subec.se** **Web: www.subec.se**

Copyright © 2026 Subec

INDIVIDUAL ADJUSTABLE ROLLER CROSS

Max Opening: 50mm

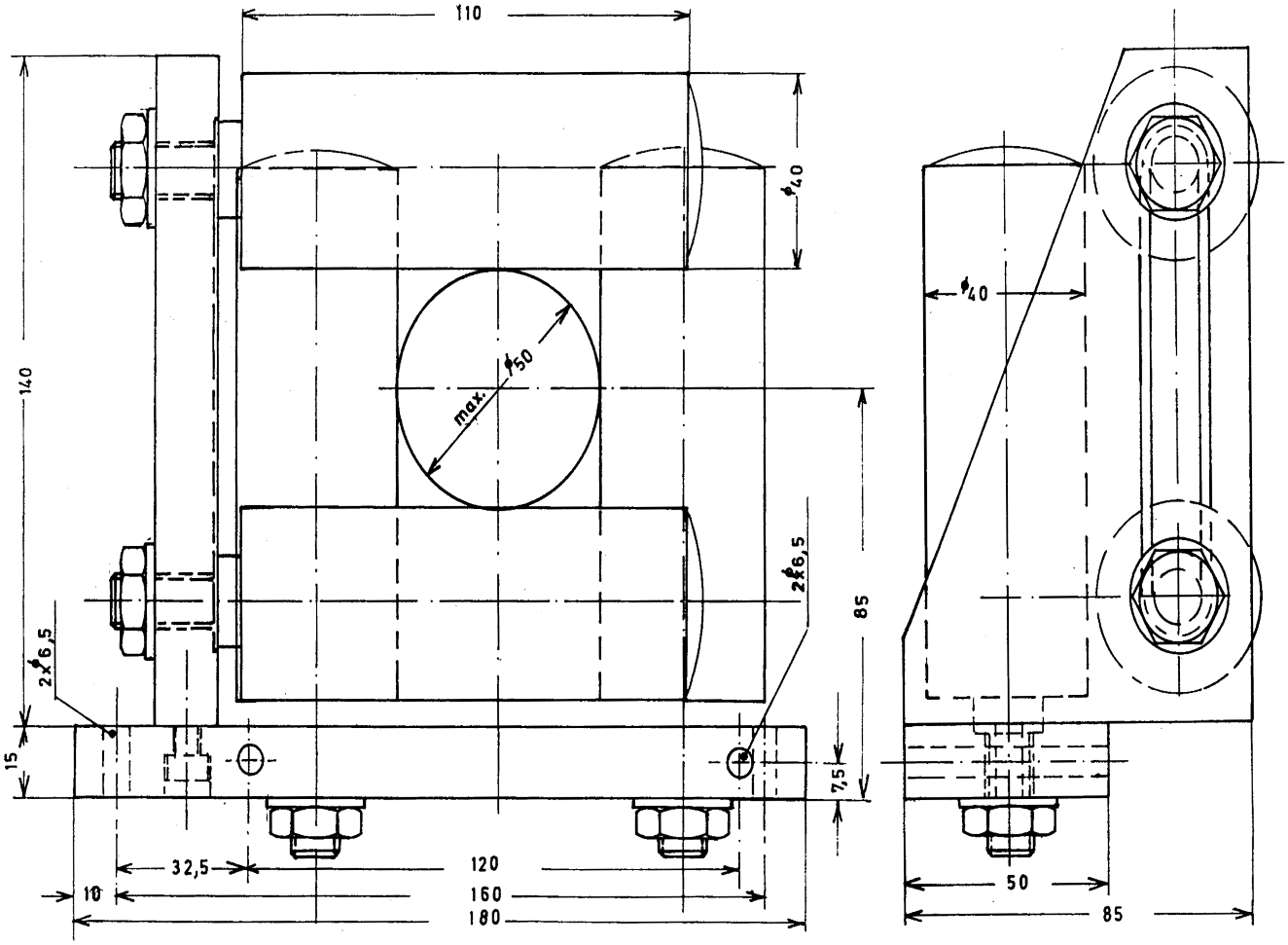

Article: 01151
Weight: 4,5kg

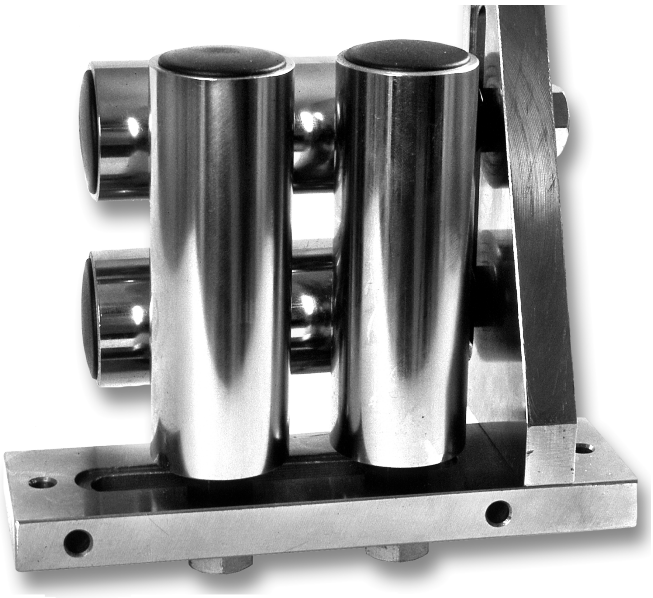

Drawing No. 3-400431-00

Subec AB **Hesselmans Torg 5** **SE- 131 54 Nacka** **Sweden** **Phone: +46-8-88 46 33** **Email: info@subec.se** **Web: www.subec.se**

Copyright © 2026 Subec

CUSTOMIZED IRIS GUIDE SYSTEMS



Article: 08129
Iris 70mm with PUR rollers

Application at contactless length measuring

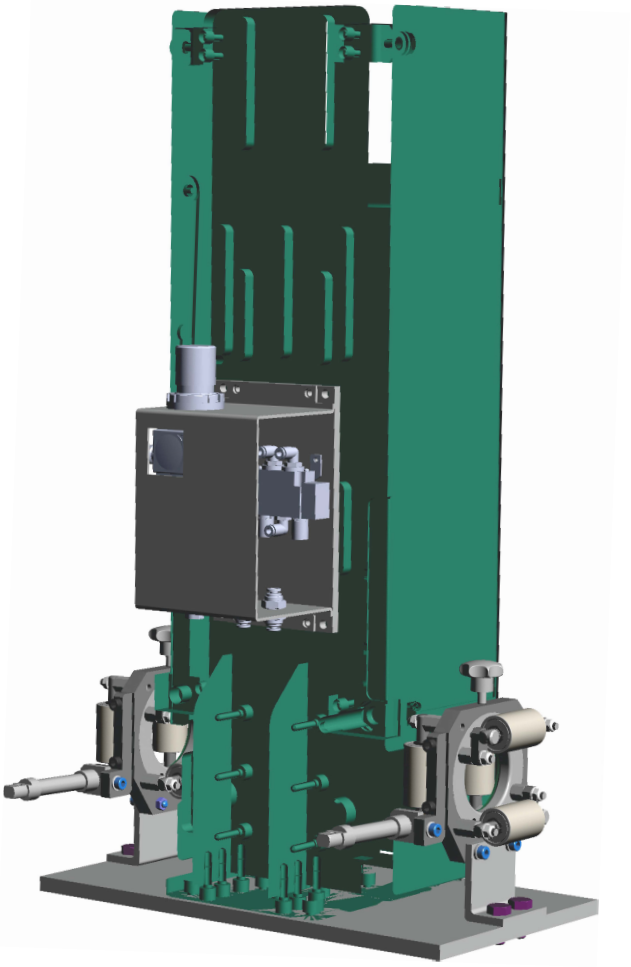

Info: The Iris crosses are activated from a PLC and can open and close by a signal in order to let splices or bigger lumps through in a controlled manner. This prevents damage to product or equipment. In case of smaller lumps and necks, the pneumatic cylinder will simply act as a spring pneumatically regulated.

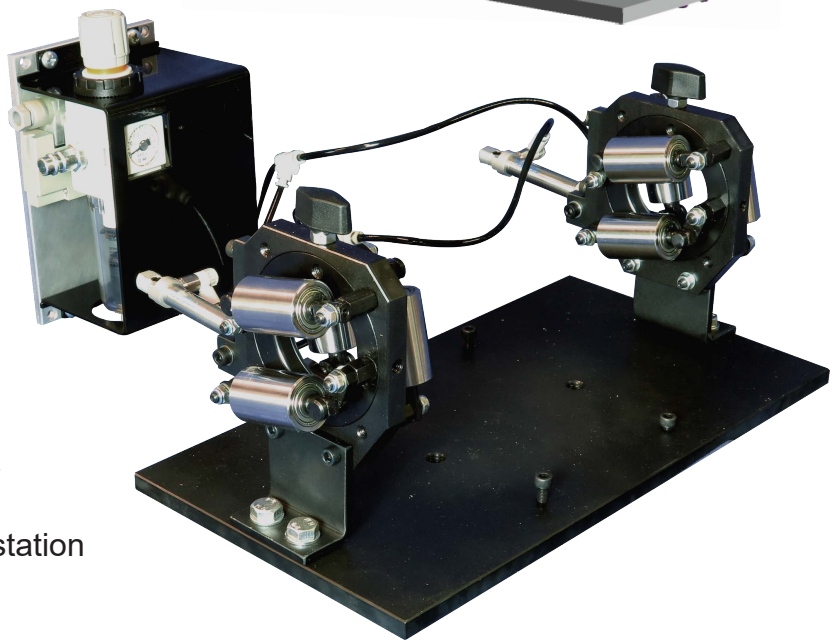

Article: 08854 Base plate
+ 2pcs 05858 (Iris)
PLC-controlled pneumatic Iris station

More information on request

Subec AB **Hesselmans Torg 5** **SE- 131 54 Nacka** **Sweden** **Phone: +46-8-88 46 33** **Email: info@subec.se** **Web: www.subec.se**

Copyright © 2026 Subec

IRIS GUIDE SYSTEM, OPTIONS



Option: Availabe with brackets that allows for mounting on stands.

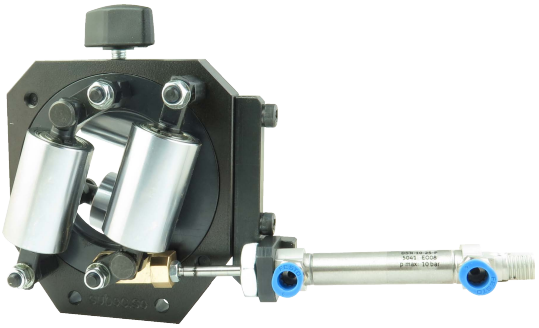

Option: With pneumatic open/close. This allows the iris to have a springloaded opening that can be adjusted automatically to the product diameter.



Option: With safety cover or safety lock.

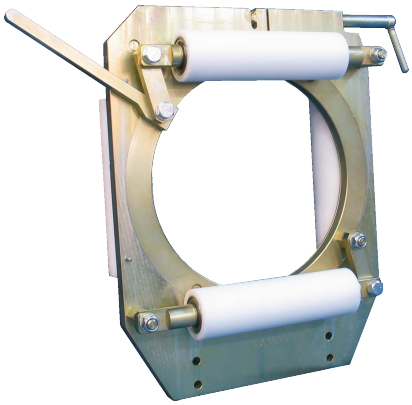

Option: Different roller materials such as: Chrome coated (standard), Tungsten Carbide, POM, PU or PA6 for different applications. Sleeve rollers are also available.

Subec AB **Hesselmans Torg 5** **SE- 131 54 Nacka** **Sweden** **Phone: +46-8-88 46 33** **Email: info@subec.se** **Web: www.subec.se**

Copyright © 2026 Subec

IRIS GUIDE SYSTEM, OPTIONS



Article: 8104
Pneumatic accessory



Article: 13266
Iris Ø20-105mm with customized adapter for rotating applications

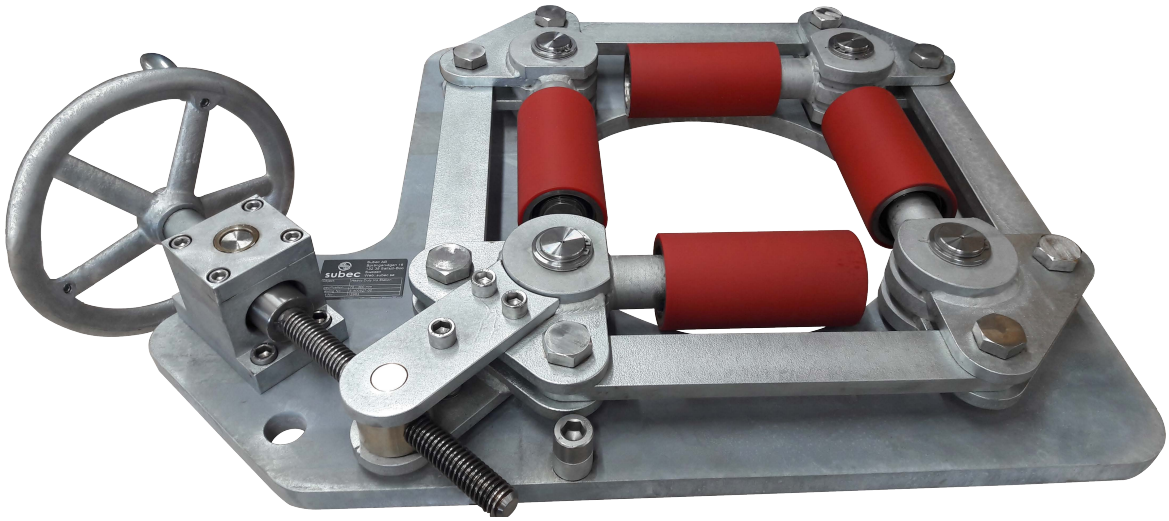

Article: 12963 (All-weather design)

The Iris bodies are available in various materials such as: Black oxidized steel, stainless and zinc coated.

Subec AB **Hesselmans Torg 5** **SE- 131 54 Nacka** **Sweden** **Phone: +46-8-88 46 33** **Email: info@subec.se** **Web: www.subec.se**

Copyright © 2026 Subec

IRIS GUIDE SYSTEM

Max Opening: 6,2mm

Rollers:

Standard: HRX (Surface hardened + chromium coated)

Option: Various Plastics, Stainless

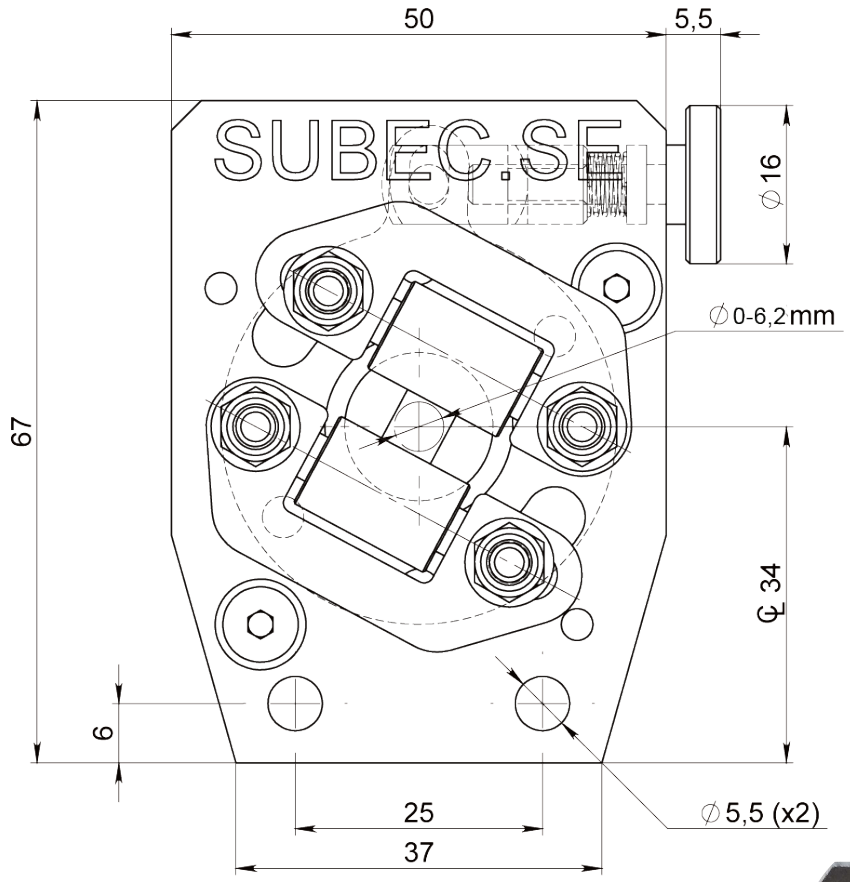

Article: 00063C*

Weight: 0,75kg

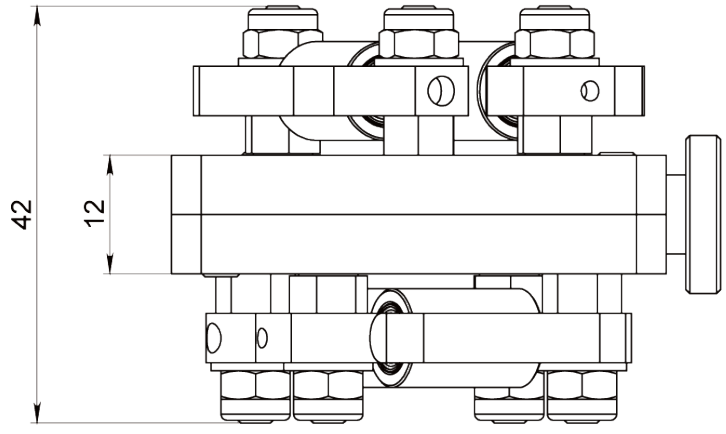



Drawing No. 3-400354-00

* Stock item

Subec AB **Hesselmans Torg 5** **SE- 131 54 Nacka** **Sweden** **Phone: +46-8-88 46 33** **Email: info@subec.se** **Web: www.subec.se**

Copyright © 2026 Subec

IRIS GUIDE SYSTEM

Max Opening: 35mm

Rollers:

Standard: HRX (Surface hardened + chromium coated)
Option: Various Plastics, Stainless

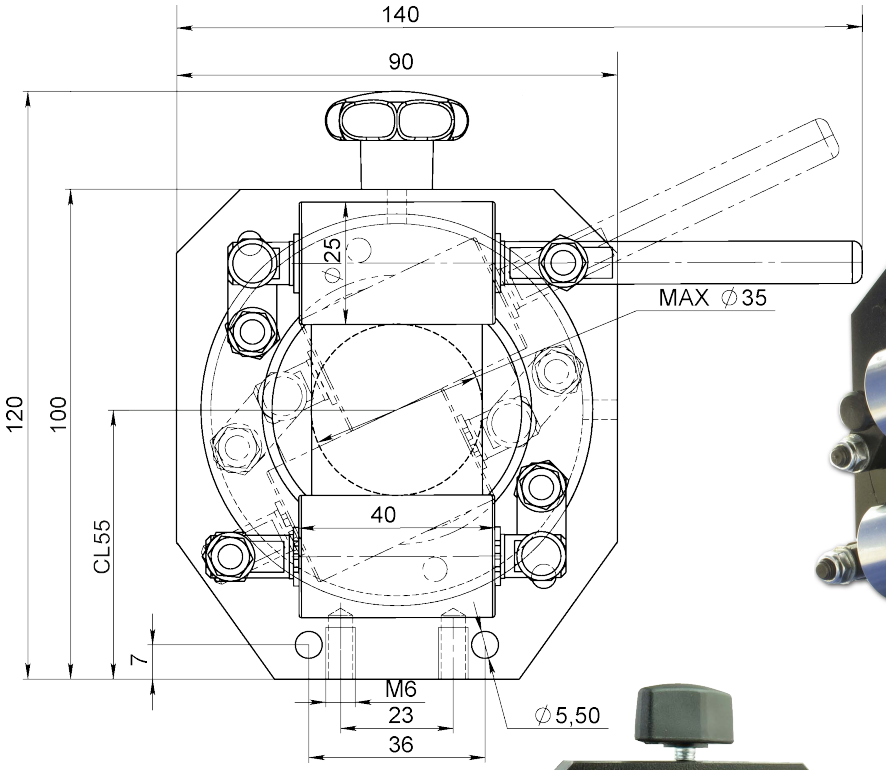

Article: 00105*
Weight: 1,3kg

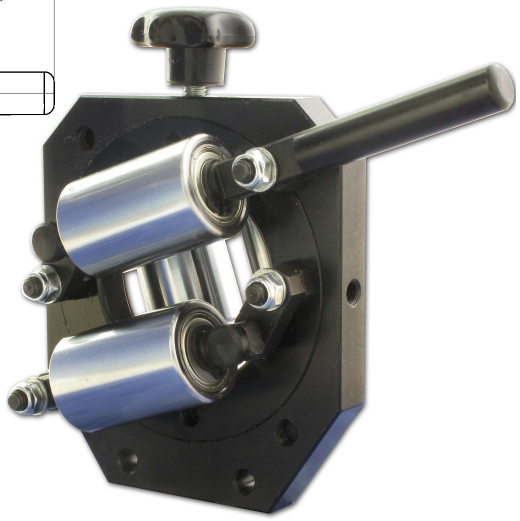

Article: 05858
Option: With Pneumatic **cylinder**



Article: 11442
Option: Tungsten Carbide **Rollers**



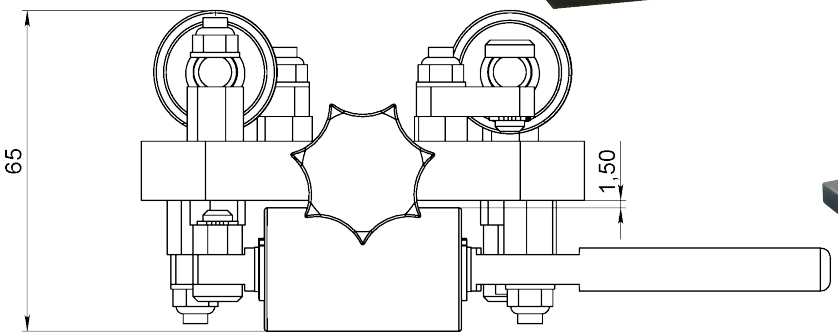

Bracket
Article: 12297

Drawing No. 3-400306-03

* Stock item

Subec AB **Hesselmans Torg 5** **SE- 131 54 Nacka** **Sweden** **Phone: +46-8-88 46 33** **Email: info@subec.se** **Web: www.subec.se**

Copyright © 2026 Subec

IRIS GUIDE SYSTEM
50, 70, 110, 120, 160, 200, 300MM

Rollers:

Standard: HRX (Surface hardened + chromium coated)

Option: Various Plastics, Stainless

Article: 00065B*

Weight: 29,1kg



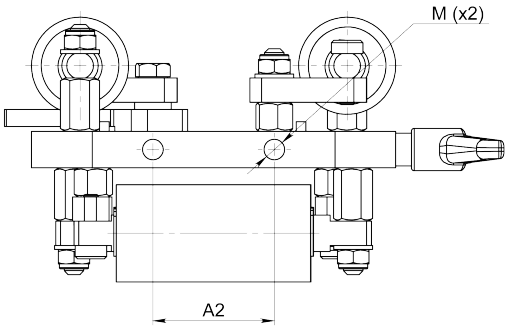

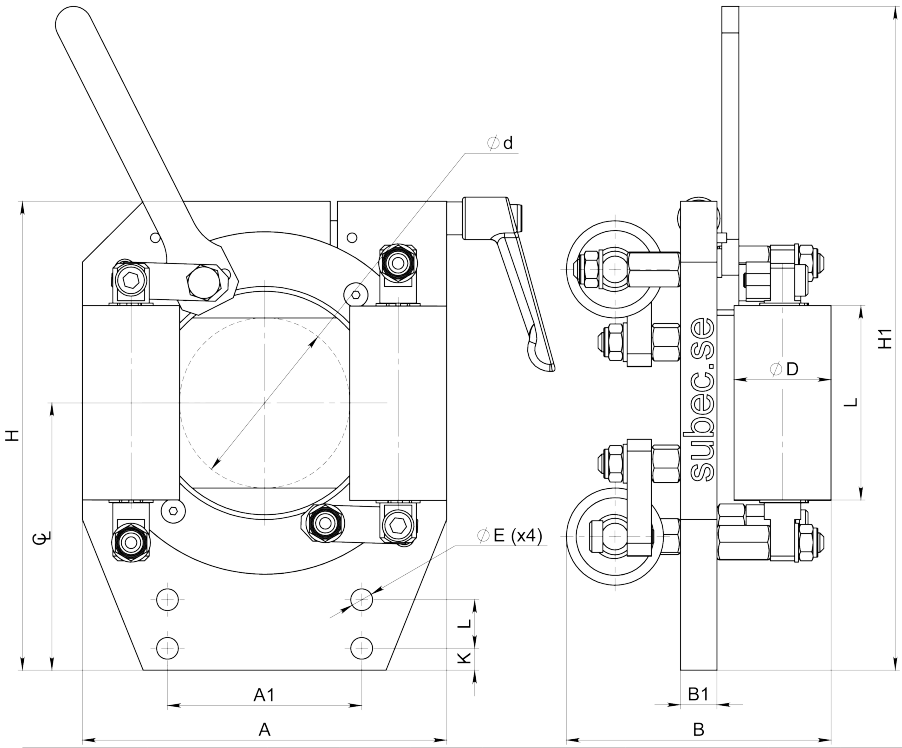

Option: With pneumatic open/**close**

Body: Also available in stainless or with Zinc coating

Rollers: Various hardness ShoreA and colors

Article	Ød	D	L	CL	A	A1	A2	B	B1	H	H1	K	L	ØE	M
02992*	0-50	30	60	90	110	60	40	78	12	150	205	10	15	6.5	M8
1181B*	10-70	40	80	110	150	80	50	109	15	193	273	9	20	9	M10
2069B*	0-110	60	110	190	240	120	-	159	25	334	420	15	30	13	-
9617A	10-120	50	110	190	240	120	-	149	25	334	420	15	30	13	-
0065B*	10-160	60	160	220	300	160	-	170	23	380	511	15	40	13	-
0066A*	35-200	60	200	243	350	160	-	161	25	445	586	15	40	13	-
05021*	20-300	100	300	385	510	280	-	238	28	695	-	25	50	17	-

* Stock item

Subec AB **Hesselmans Torg 5** **SE- 131 54 Nacka** **Sweden** **Phone: +46-8-88 46 33** **Email: info@subec.se** **Web: www.subec.se**

Copyright © 2026 Subec

IRIS GUIDE SYSTEM

Product range: Ø 12-70mm

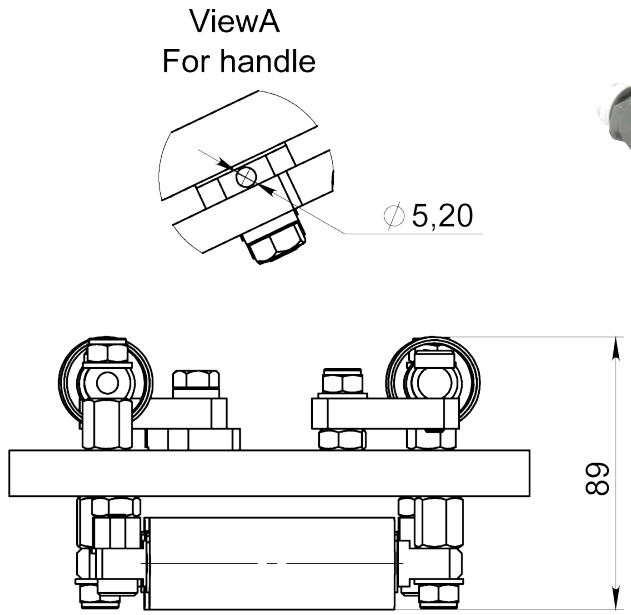



Article: 11062
For rotating mounting

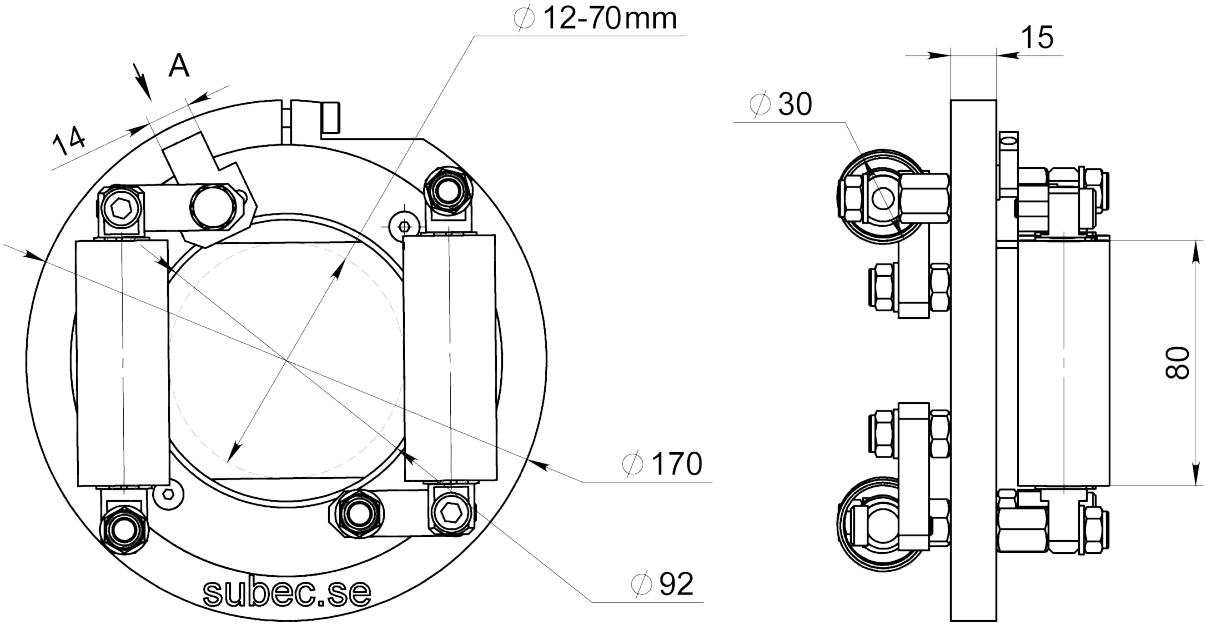

Drawing No. 3-400301-01

Subec AB **Hesselmans Torg 5** **SE- 131 54 Nacka** **Sweden** **Phone: +46-8-88 46 33** **Email: info@subec.se** **Web: www.subec.se**

Copyright © 2026 Subec

IRIS GUIDE SYSTEM

Max Opening: 160mm

Rollers:

Standard: HRX (Surface hardened + chromium coated)
Option: Various Plastics, Stainless

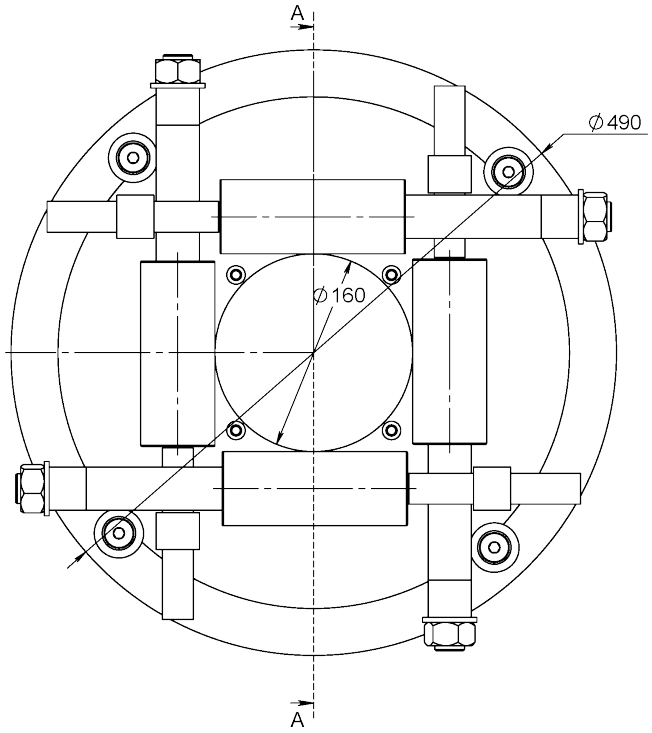

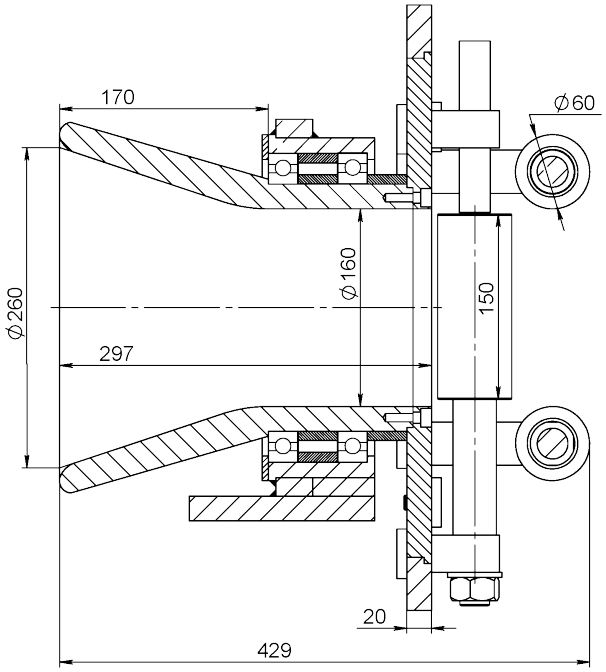

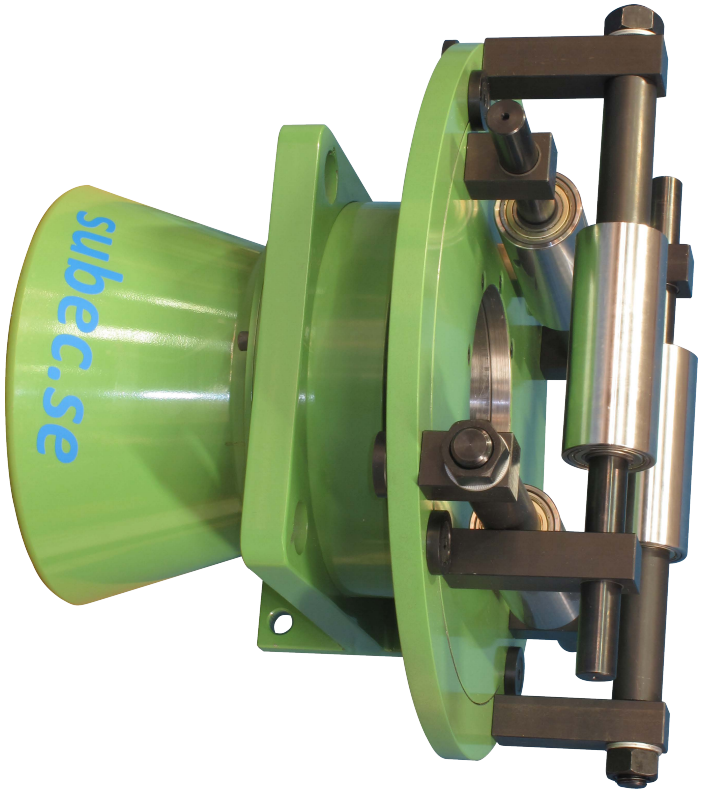

Article: 09576
Rotating Iris with Rotating Funnel Inlet

Drawing No. 3-401195-00

Subec AB **Hesselmans Torg 5** **SE- 131 54 Nacka** **Sweden** **Phone: +46-8-88 46 33** **Email: info@subec.se** **Web: www.subec.se**

Copyright © 2026 Subec

IRIS GUIDE SYSTEM

Opening: 100-200mm

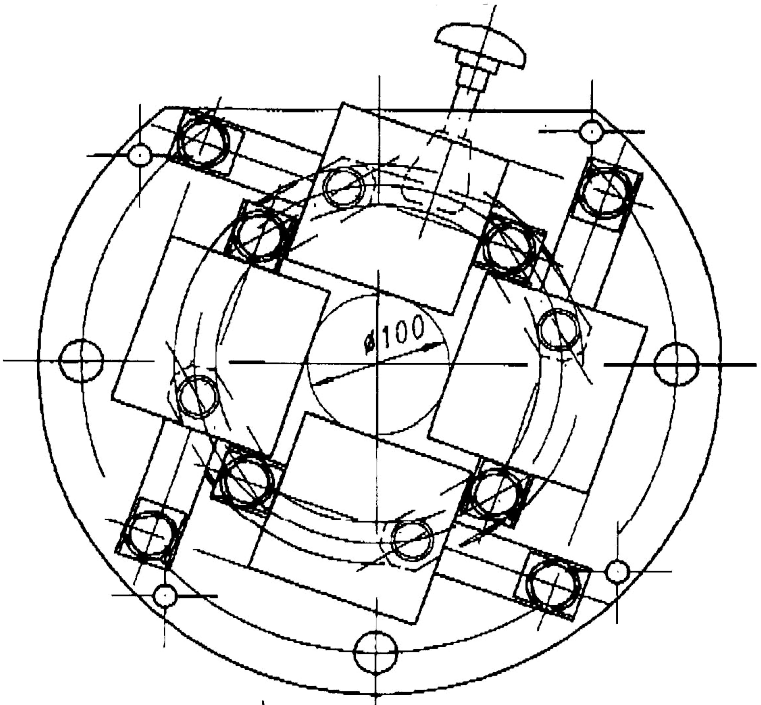

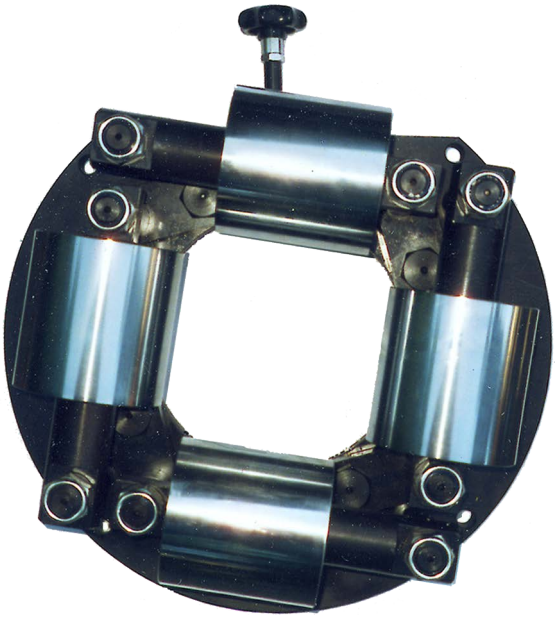

Article: 00067
Weight: 70kg

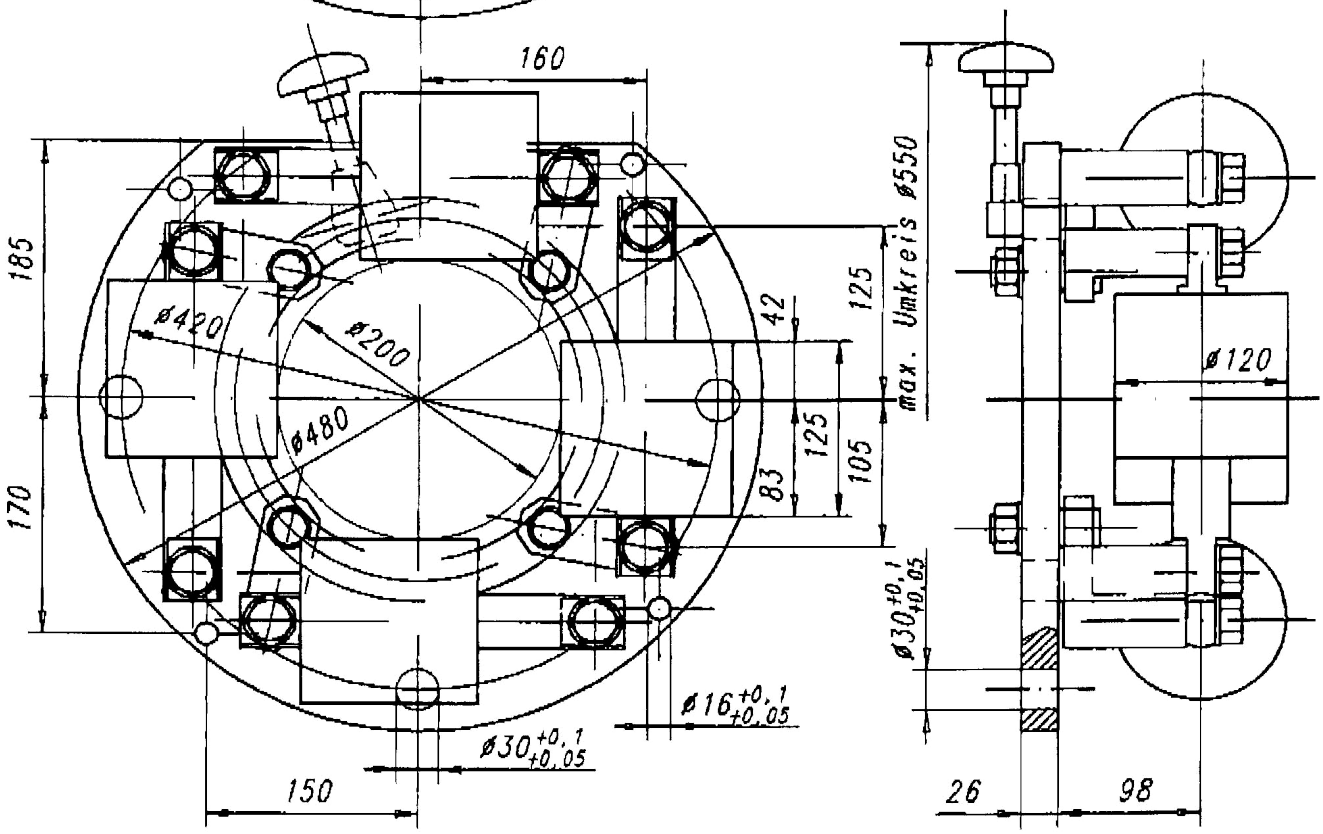

Option: Springloaded execution.
Article: 10388

Drawing No. 3-400373-00

Subec AB **Hesselmans Torg 5** **SE- 131 54 Nacka** **Sweden** **Phone: +46-8-88 46 33** **Email: info@subec.se** **Web: www.subec.se**

Copyright © 2026 Subec

IRIS GUIDE SYSTEM

Opening: 20-300mm

Rollers:

Exchangeable sleeve rollers

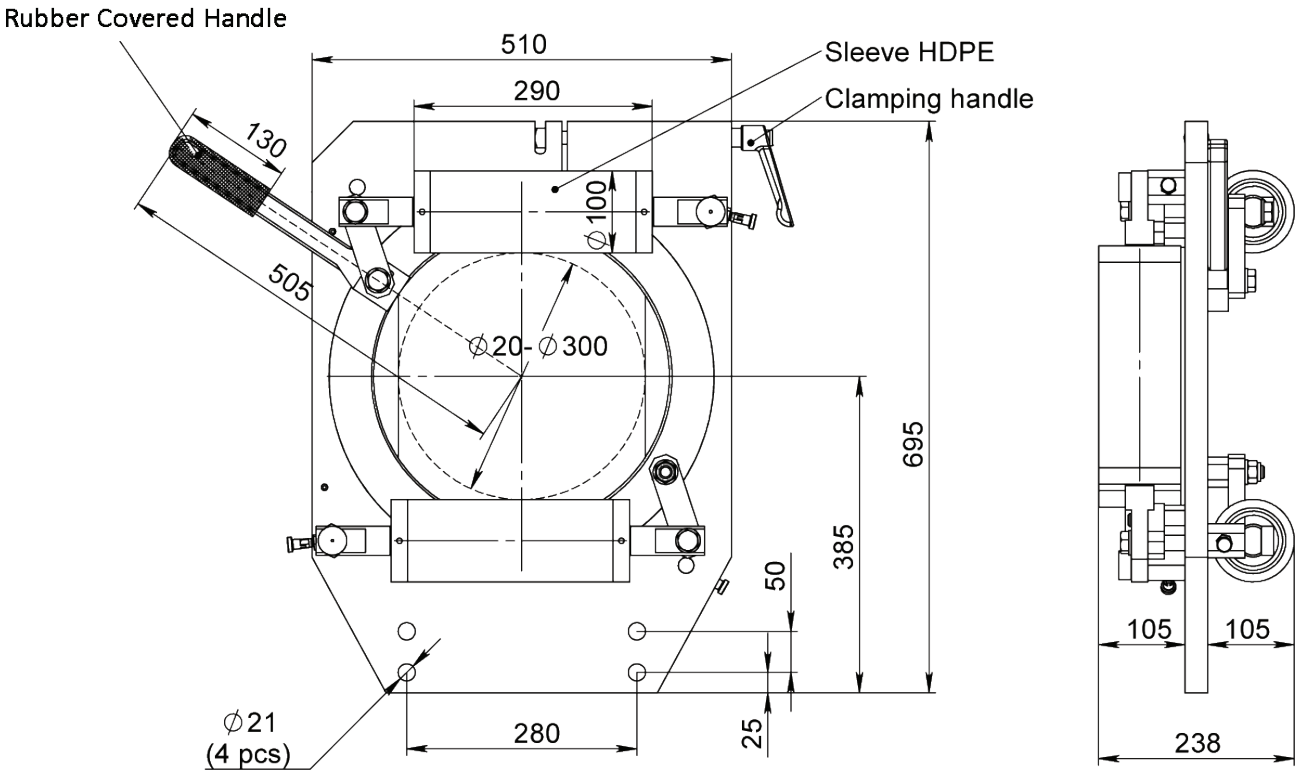



Article: 13674
Weight: 120kg



Option: Safety Cover
Article: 12609A
Option: Safety Interlock

Drawing No. 3-400539-00

Subec AB **Hesselmans Torg 5** **SE- 131 54 Nacka** **Sweden** **Phone: +46-8-88 46 33** **Email: info@subec.se** **Web: www.subec.se**

Copyright © 2026 Subec

IRIS GUIDE SYSTEM

Max Opening: 200mm, 300mm, 450mm

Rollers: Chromium coated, PUR coated or Stainless

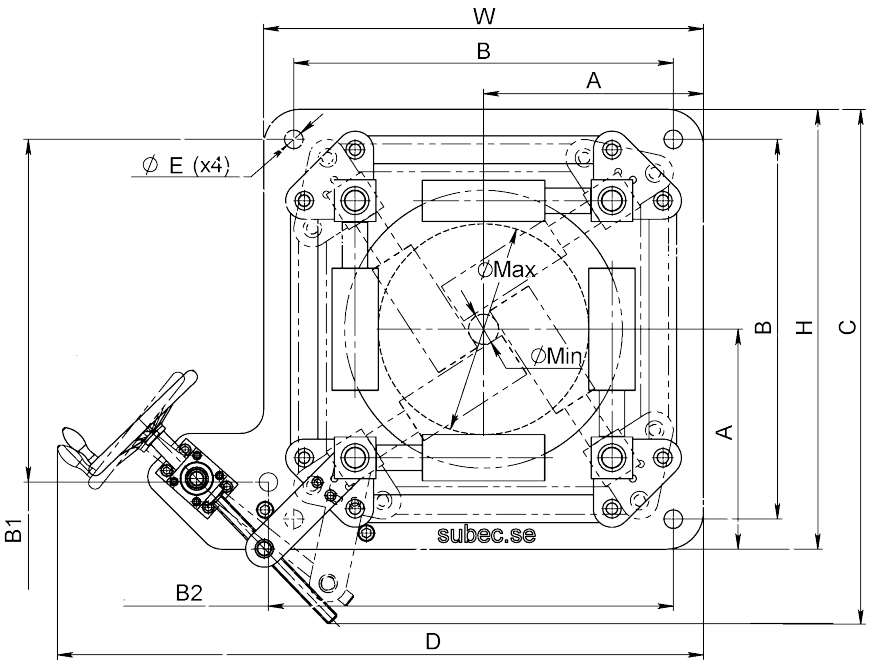

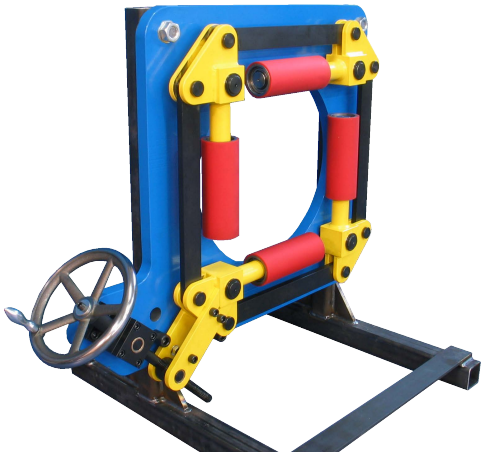

Article: 07285

Article	A	B	B1	B2	C	D	H	W	ØE	ØMin	ØMax	Weight	Roller
09134	325	435	435	480	550	705	550	500	31	0	200	80	Ø75 PU
08760	390	650	645	780	847	1186	780	780	37	70	300	225	Ø100 PU
09706	390	650	645	780	847	1186	780	780	37	70	300	225	Ø100 HRX
07285	475	820	740	875	1111	1396	950	950	40	70	450	350	Ø100 PU
08377	475	820	740	875	1111	1396	950	950	40	70	450	350	Ø100 Cr

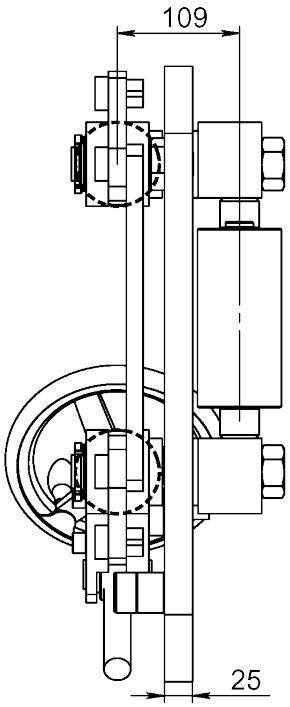

Info: Heavy duty design allowing opening window adjustment during production.

Pic: Iris (09134) with rollers on both sides of the body enables closing to zero.

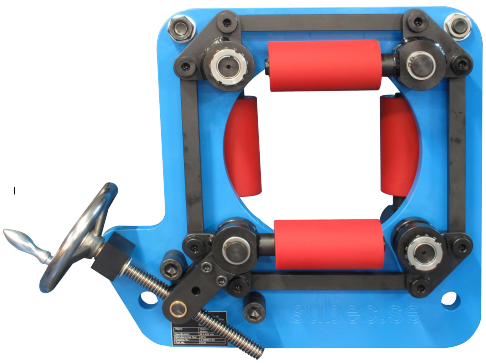

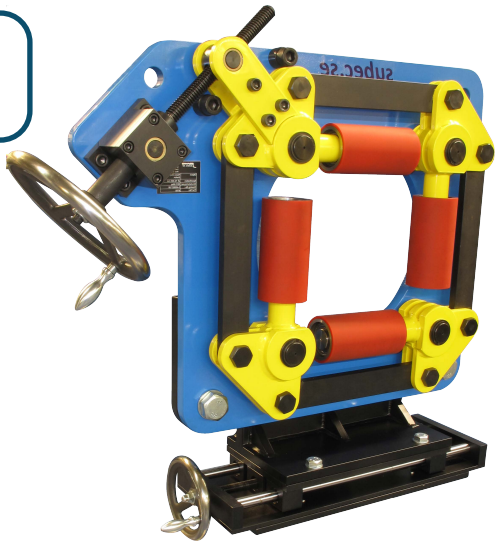

Option: Iris 300 (08760) with traverse unit (09094)

Drawing No. 3-400927-00

Subec AB **Hesselmans Torg 5** **SE- 131 54 Nacka** **Sweden** **Phone: +46-8-88 46 33** **Email: info@subec.se** **Web: www.subec.se**

Copyright © 2026 Subec

IRIS GUIDE SYSTEM

Max Opening: 400mm

Rollers:

Standard: HRX (Surface hardened + chromium coated)

Option: Various Plastics, Stainless

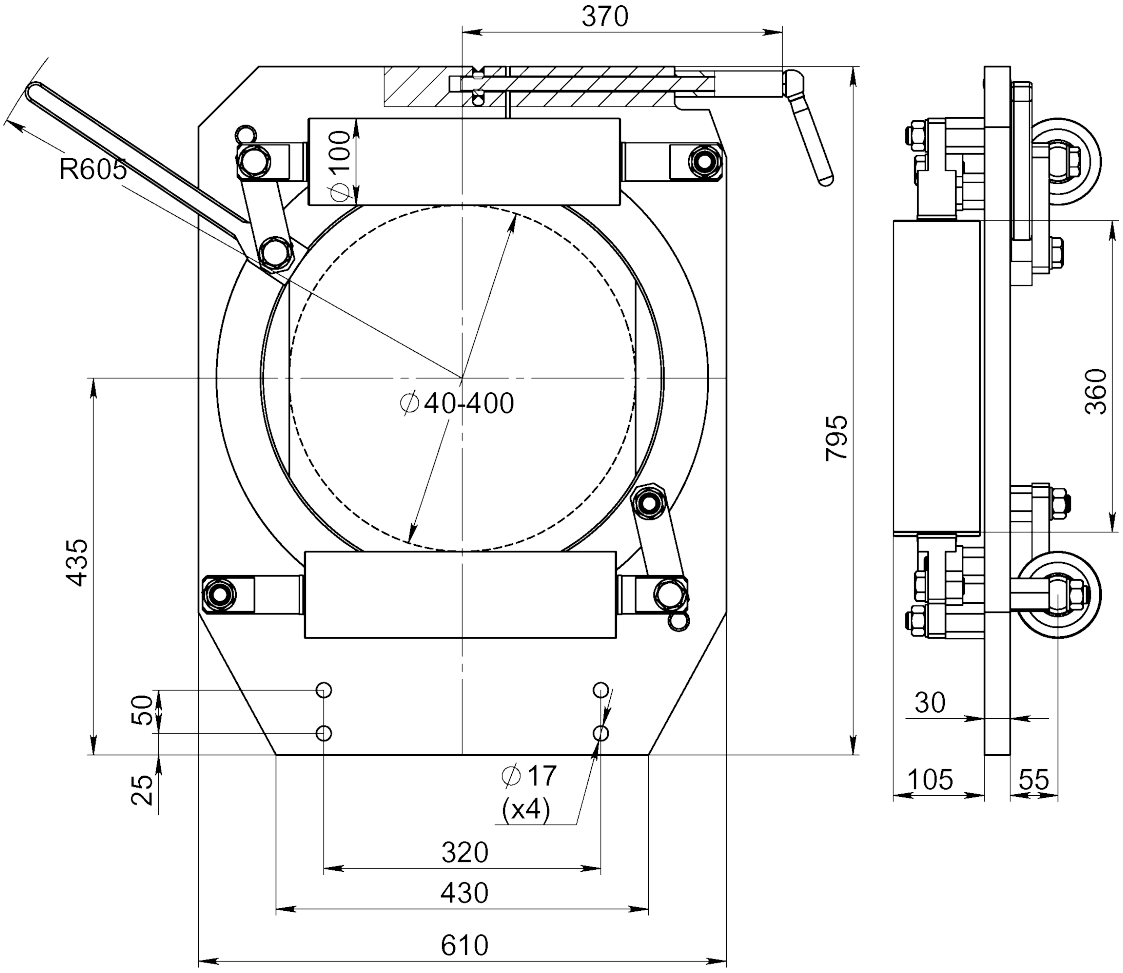

Option: Zinc with POM-Rollers

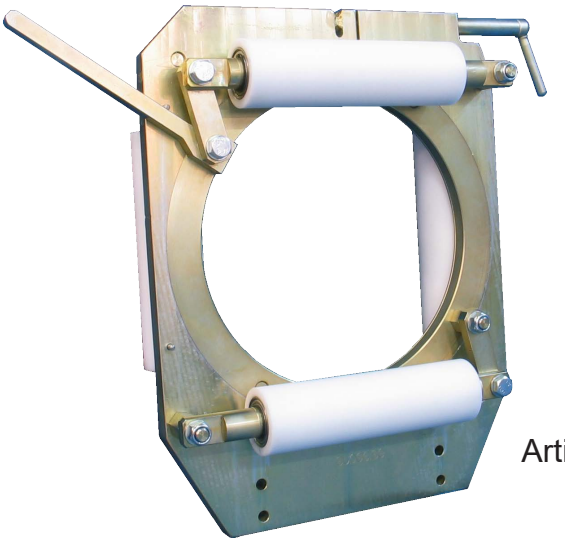

Article: 07441

Article	Roller Material
08329	HRX
07441	POM
08141	PUR
07673	PA6

Drawing No. 3-400939-00

Subec AB **Hesselmans Torg 5** **SE- 131 54 Nacka** **Sweden** **Phone: +46-8-88 46 33** **Email: info@subec.se** **Web: www.subec.se**

Copyright © 2026 Subec

IRIS GUIDE SYSTEM

Opening: 50-450mm

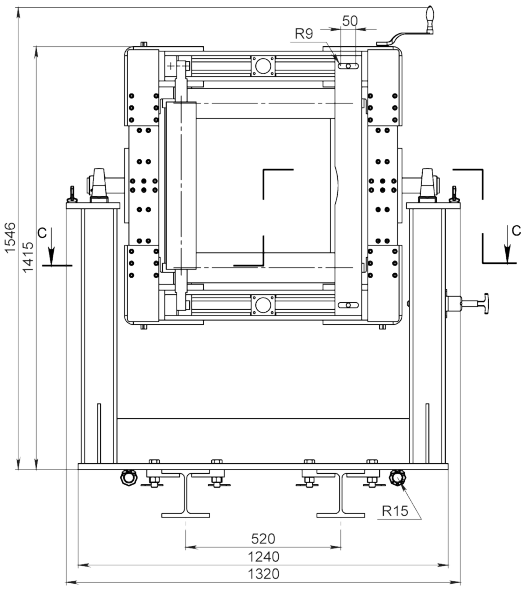

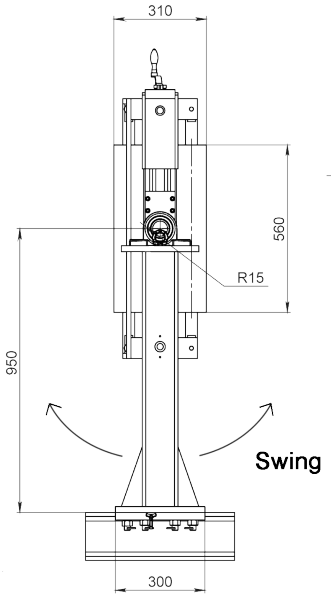

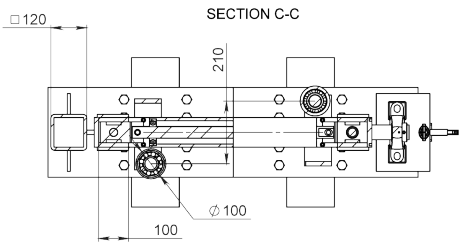

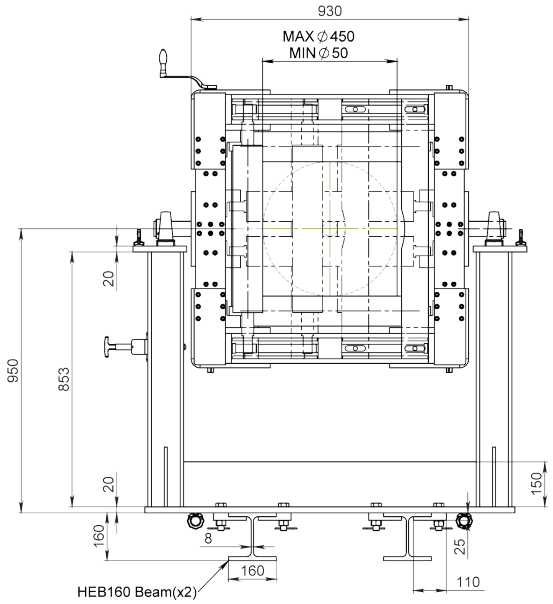

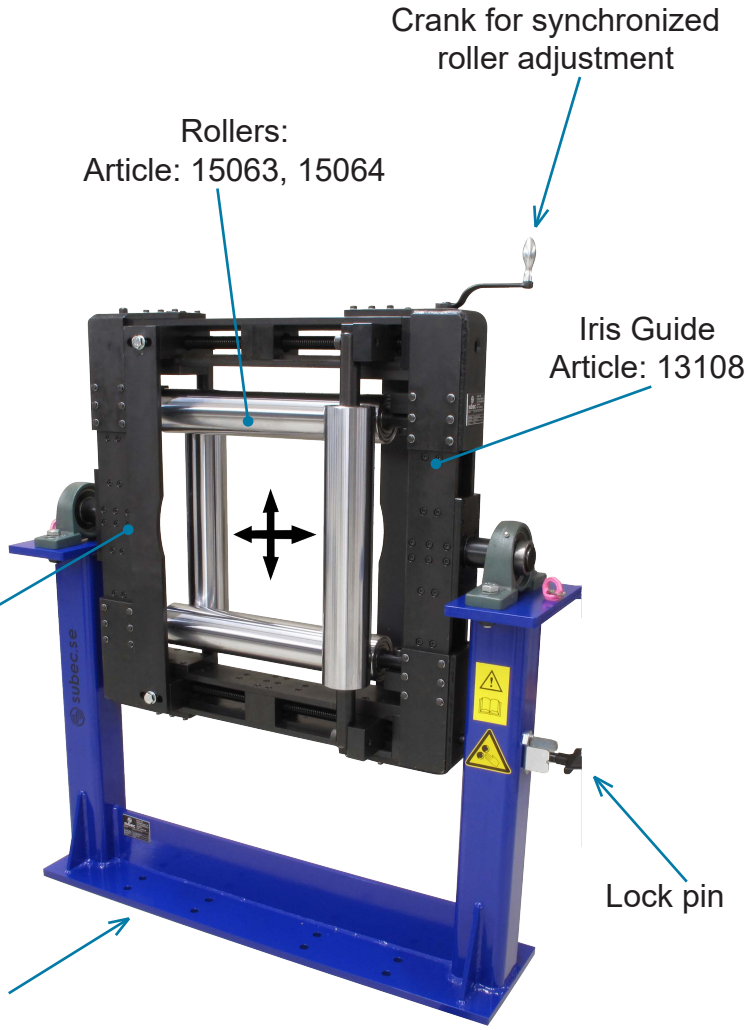

Subec AB **Hesselmans Torg 5** **SE- 131 54 Nacka** **Sweden** **Phone: +46-8-88 46 33** **Email: info@subec.se** **Web: www.subec.se**

Copyright © 2026 Subec

IRIS GUIDE SYSTEM

Max Opening: 500mm

Rollers:

Standard: HRX (Surface hardened + chromium coated)

Option: Various Plastics, Stainless

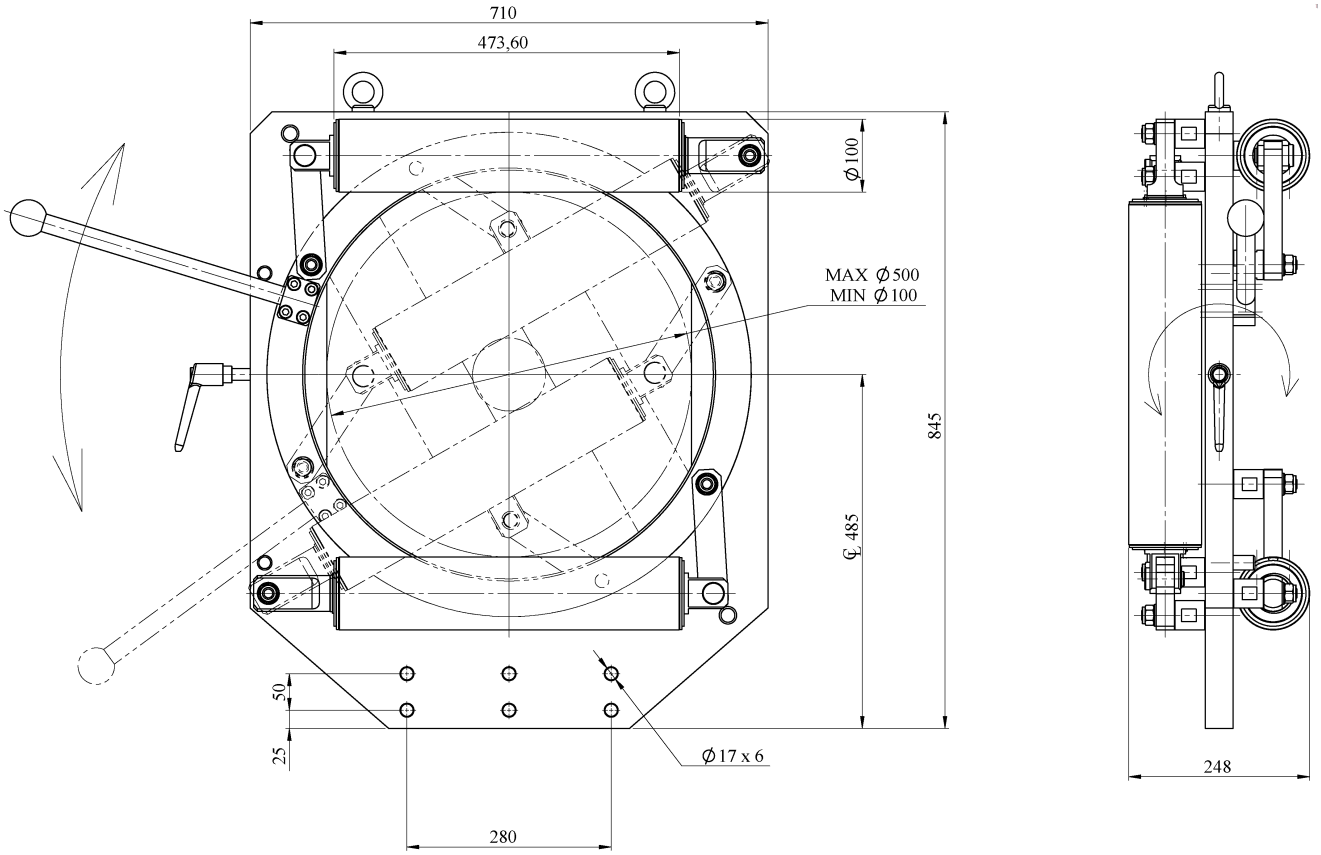

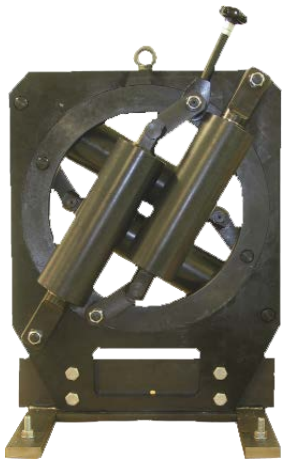

Article: 04239

Drawing No. 3-400724-00

Subec AB **Hesselmans Torg 5** **SE- 131 54 Nacka** **Sweden** **Phone: +46-8-88 46 33** **Email: info@subec.se** **Web: www.subec.se**

Copyright © 2026 Subec

SECTOR GUIDE 72°, 90° & 120°

Max Opening: 50-300mm²

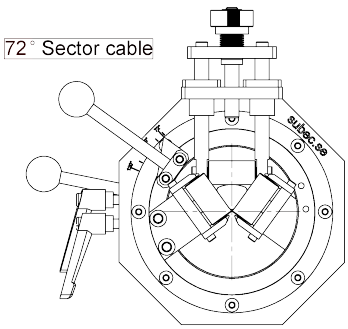

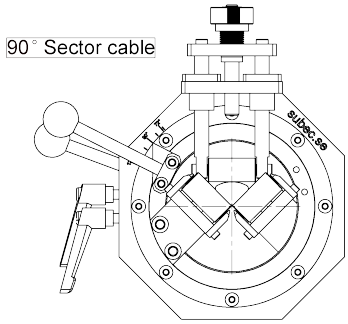

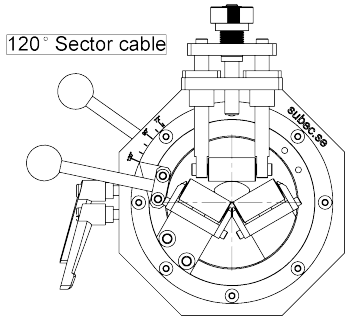

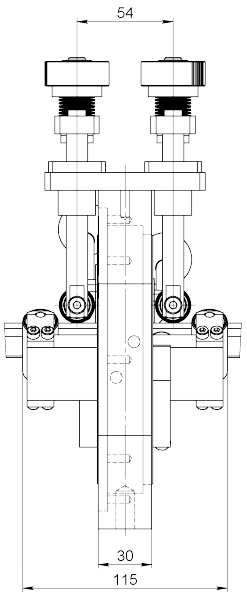

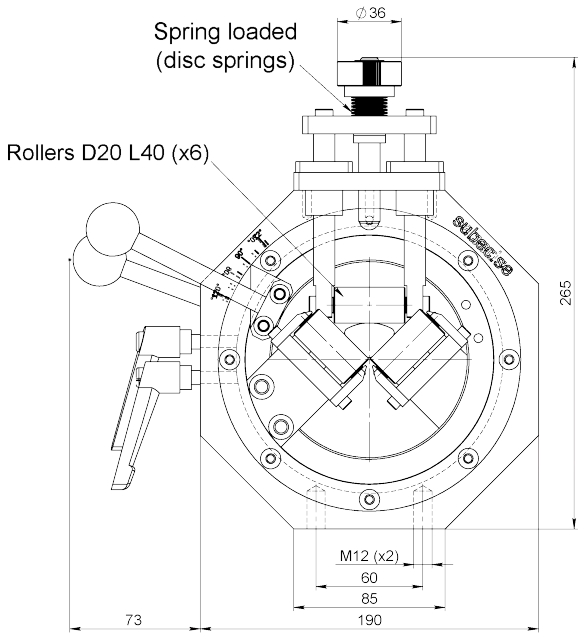



Example of application
Sector: 72° x 5

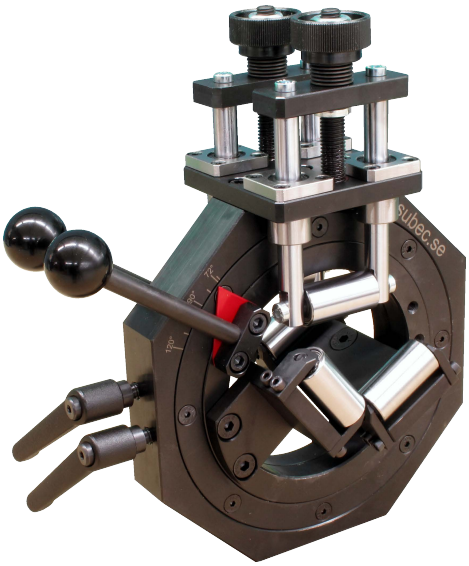

Article: 11972

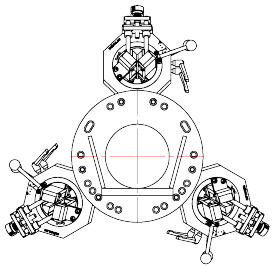

3pcs #11972

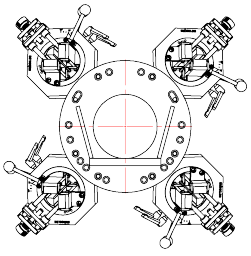

4pcs #11972

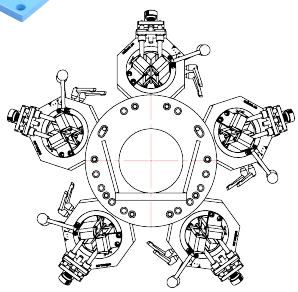

5pcs #11972

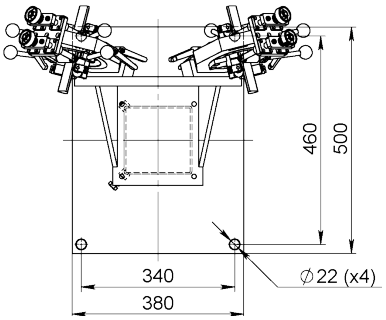

Drawing No. 3-401327-00

Subec AB **Hesselmans Torg 5** **SE- 131 54 Nacka** **Sweden** **Phone: +46-8-88 46 33** **Email: info@subec.se** **Web: www.subec.se**

Copyright © 2026 Subec

STAND
WITH TRAVERS UNIT

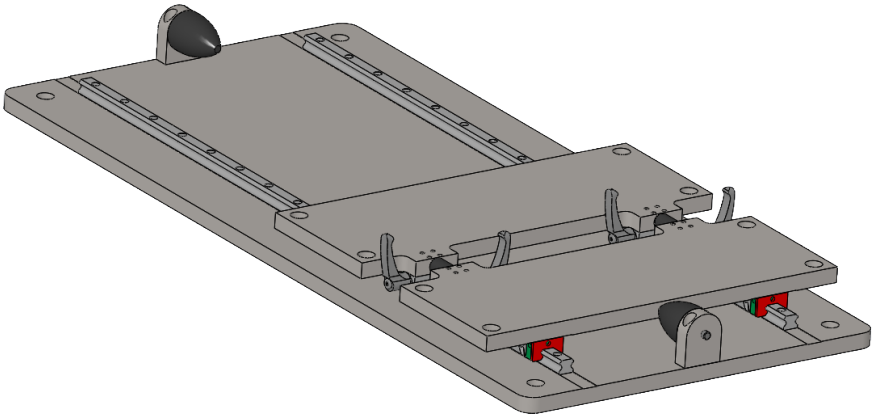

Article: 15132
Traversing unit



Height adjustable Stand
on traversing unit Article: 07173

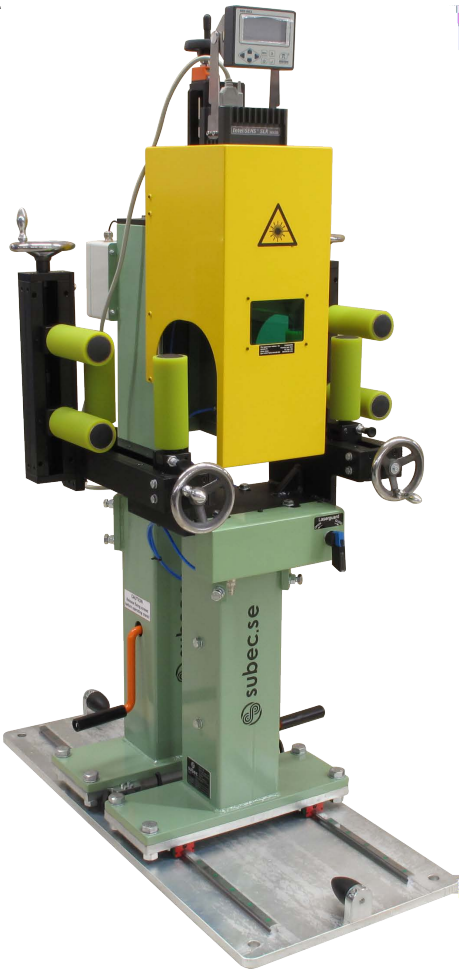

Length counter module Article: 14786
on traversing unit Article: 15132

Subec AB **Hesselmans Torg 5** **SE- 131 54 Nacka** **Sweden** **Phone: +46-8-88 46 33** **Email: info@subec.se** **Web: www.subec.se**

Copyright © 2026 Subec

CUSTOMIZED STANDS



Article: 17271 + 16934
Height adjustable stand with storage box for passive straighteners



Article: 13663+13097+12564
Height adjustable stand with turnable roller bracket for diabolo roller



Article: 16648 + 11598
Double legged Stand, Height adjustable

Subec AB **Hesselmans Torg 5** **SE- 131 54 Nacka** **Sweden** **Phone: +46-8-88 46 33** **Email: info@subec.se** **Web: www.subec.se**

Copyright © 2026 Subec

MOTORIZED HEIGHT ADJUSTABLE STAND

Height: 510 +- 20mm

Complete assembly
Article: 16880

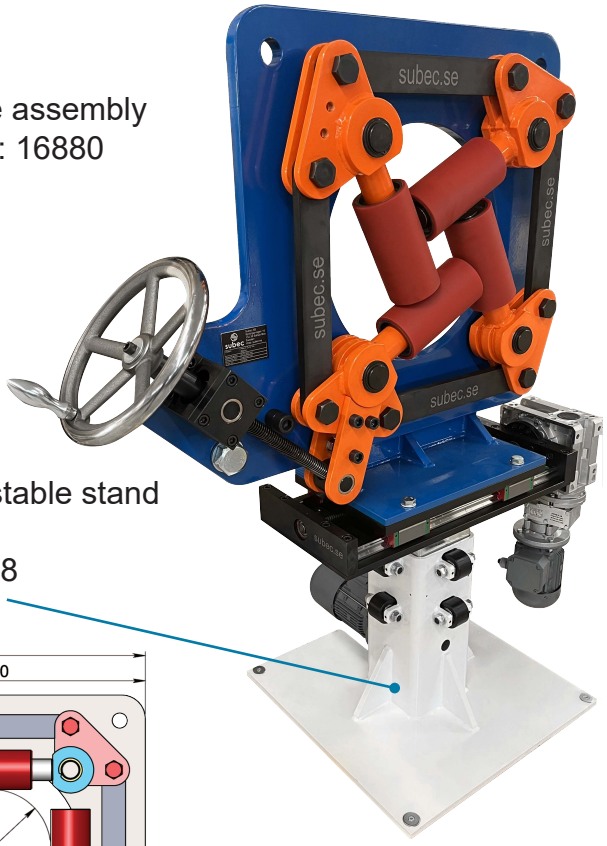

Motorized height adjustable stand

Article: 16668

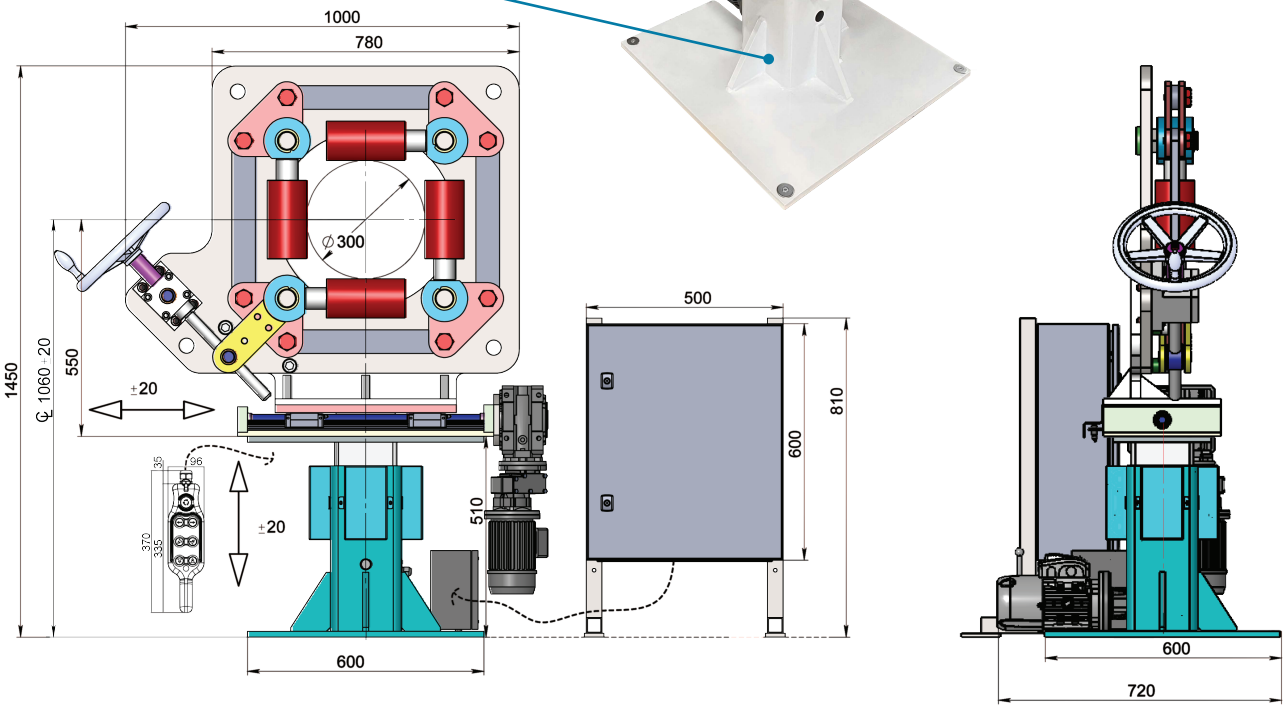

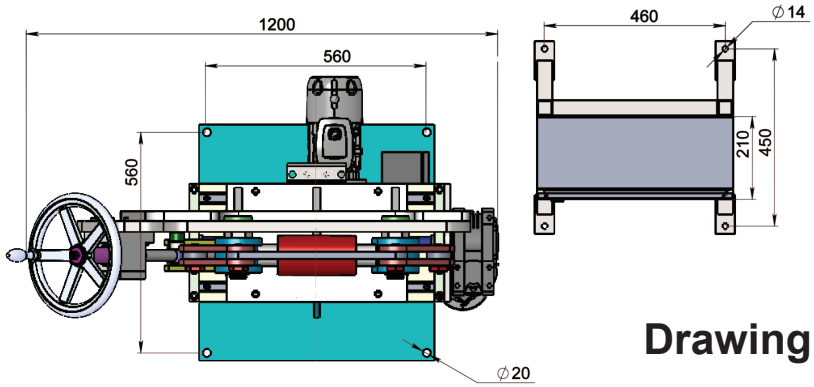

Drawing No. 3-401443-00

Subec AB **Hesselmans Torg 5** **SE- 131 54 Nacka** **Sweden** **Phone: +46-8-88 46 33** **Email: info@subec.se** **Web: www.subec.se**

Copyright © 2026 Subec

HEIGHT ADJUSTABLE STAND

With Hydraulic Jack

Height: 830 +- 108mm

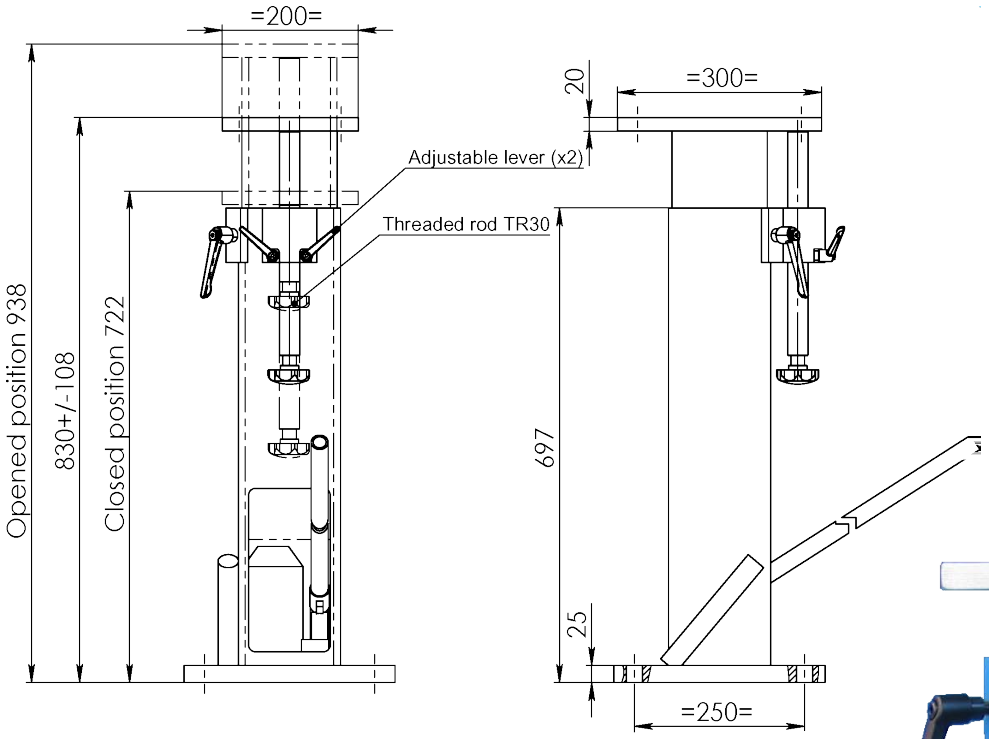

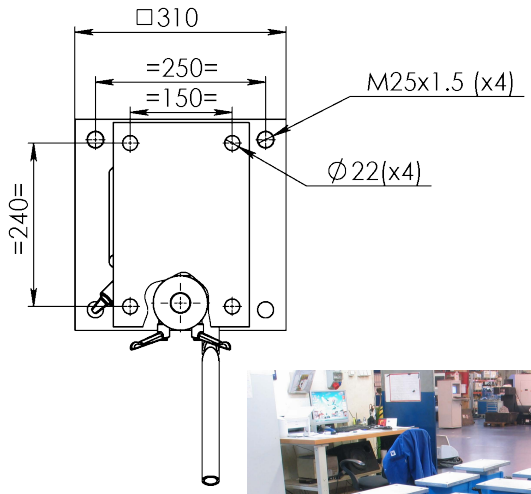

Article: 07227
Weight: 68kg
Lifting Power ≈ 3T





Drawing No. 3-400461-00

Subec AB **Hesselmans Torg 5** **SE- 131 54 Nacka** **Sweden** **Phone: +46-8-88 46 33** **Email: info@subec.se** **Web: www.subec.se**

Copyright © 2026 Subec

HEIGHT ADJUSTABLE STAND

Height: 890 +- 60mm

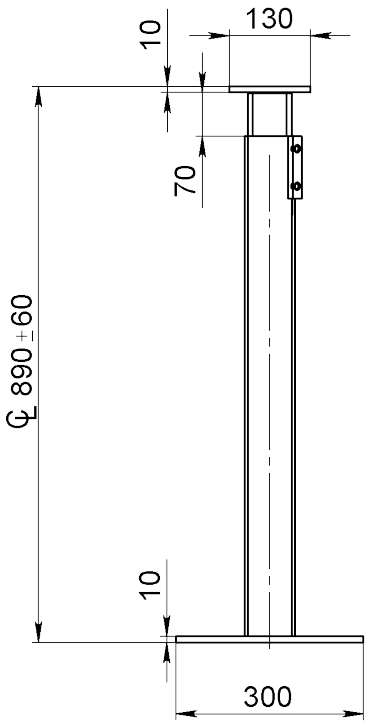

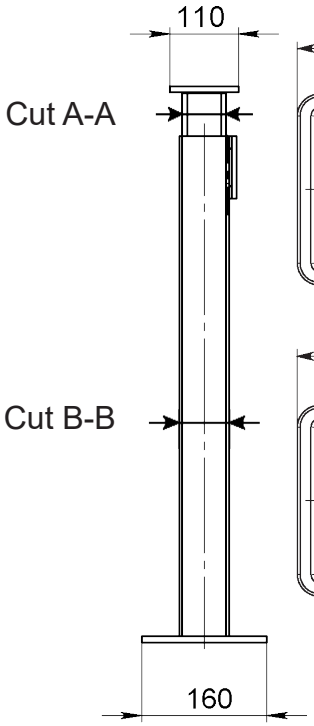

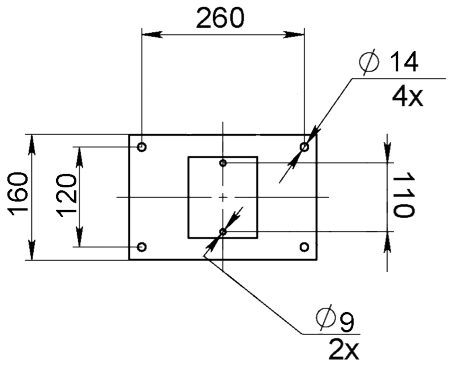

Article: 04880B
Weight: 15,5kg

Option: With Wire Straightener S40-Q-7

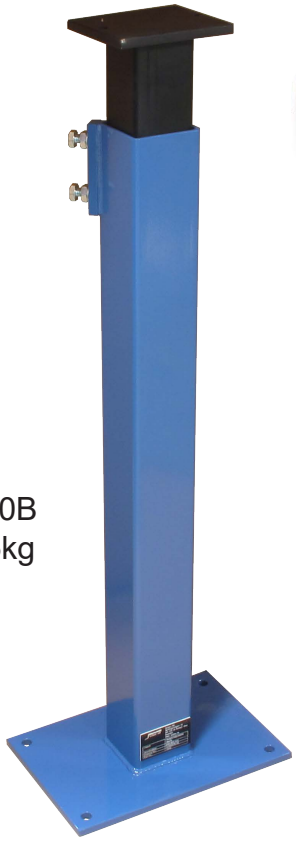



Drawing No. 3-400076-04

Subec AB **Hesselmans Torg 5** **SE- 131 54 Nacka** **Sweden** **Phone: +46-8-88 46 33** **Email: info@subec.se** **Web: www.subec.se**

Copyright © 2026 Subec

HEIGHT ADJUSTABLE STAND

With Mechanical Jack 500kg
Height: 950 +- 150mm



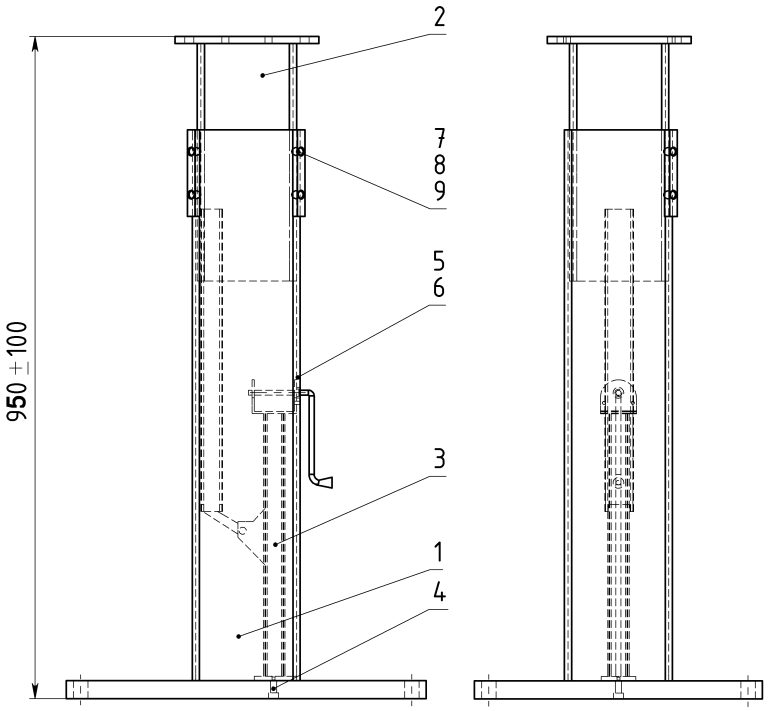

Article: 02016
Weight: 70kg

Option: With hydraulic jack
Article: 03072
Weight: 67kg

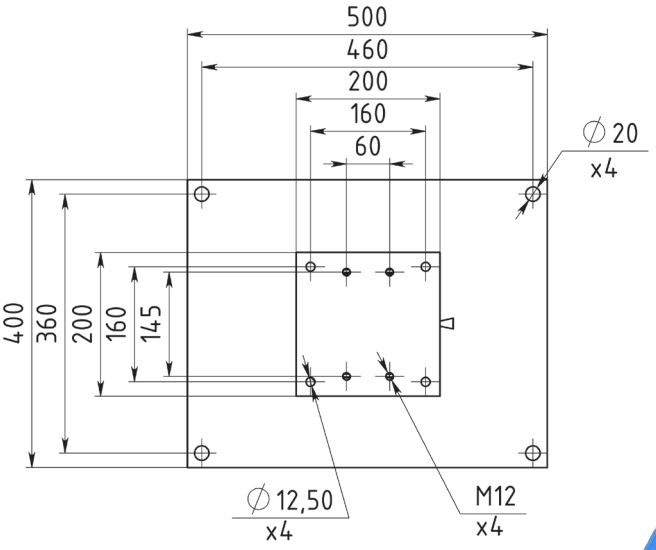



Drawing No. 3-400461-00

Subec AB
Hesselmans Torg 5
SE- 131 54 Nacka
Sweden
Phone: +46-8-88 46 33
Email: info@subec.se
Web: www.subec.se

Copyright © 2026 Subec

HEIGHT ADJUSTABLE STAND

Height: x +- 150mm

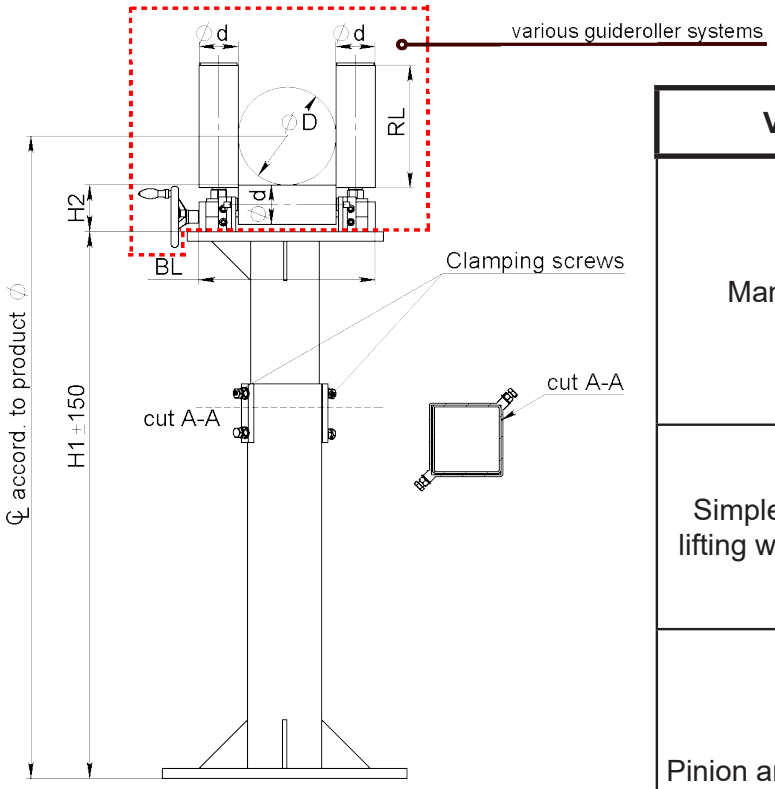

Various executions are available.	
Manual lifting	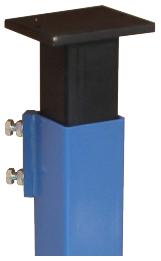
Simple adjustment lifting with thread rod	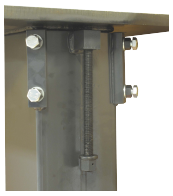
Pinion and crank lifting	
Hydraulic jack lifting	
Rotating Mounting Plate	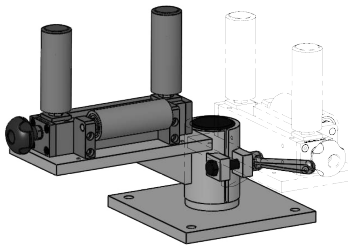

Drawing No. 3-400997-00

Subec AB **Hesselmans Torg 5** **SE- 131 54 Nacka** **Sweden** **Phone: +46-8-88 46 33** **Email: info@subec.se** **Web: www.subec.se**

Copyright © 2026 Subec

WHEEL STAND

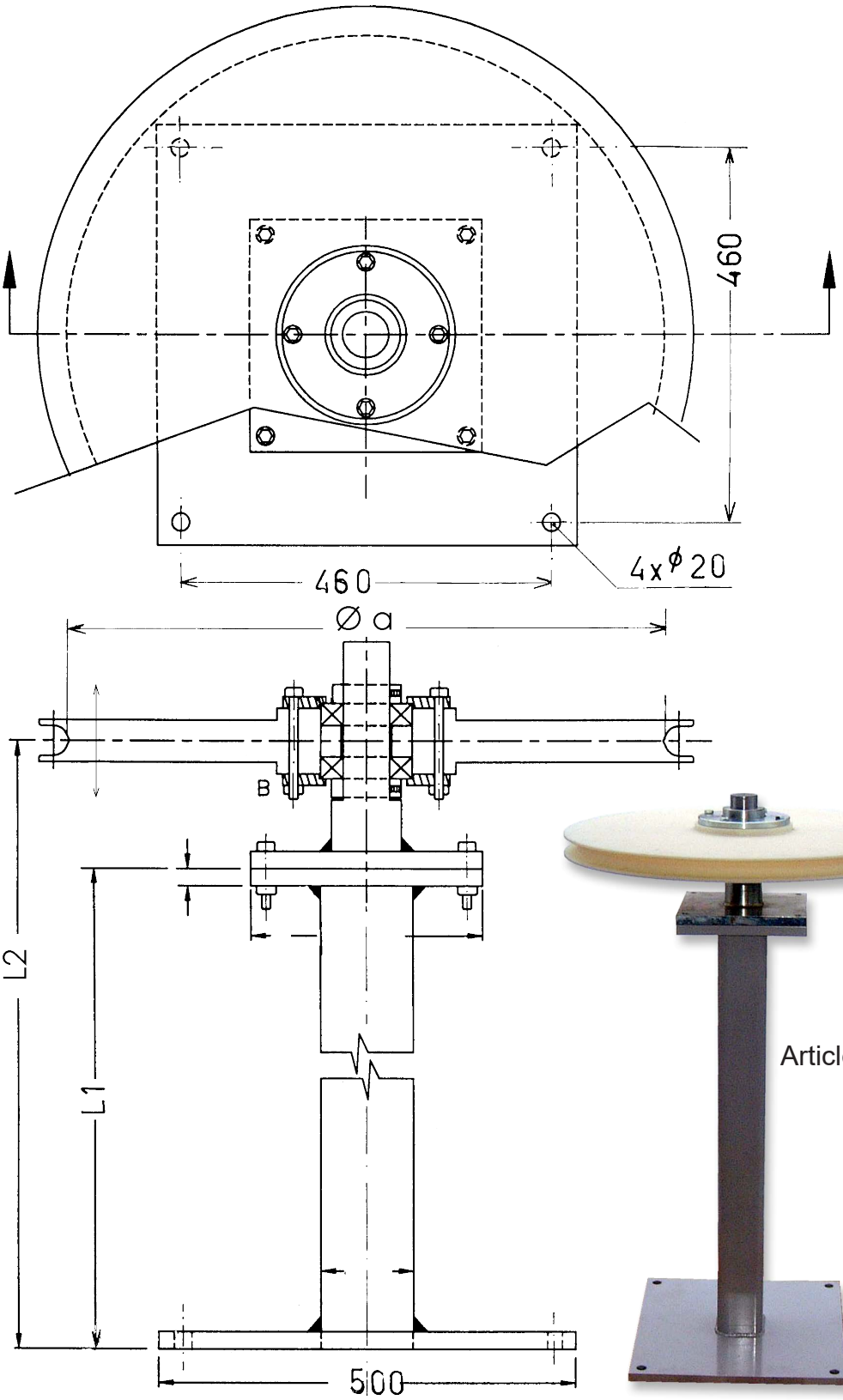

Article: 00927

Drawing No. 3-400430-00

Subec AB **Hesselmans Torg 5** **SE- 131 54 Nacka** **Sweden** **Phone: +46-8-88 46 33** **Email: info@subec.se** **Web: www.subec.se**

Copyright © 2026 Subec

HEIGHT & DEPTH ADJUSTABLE STAND

Height: 983 +- 100mm

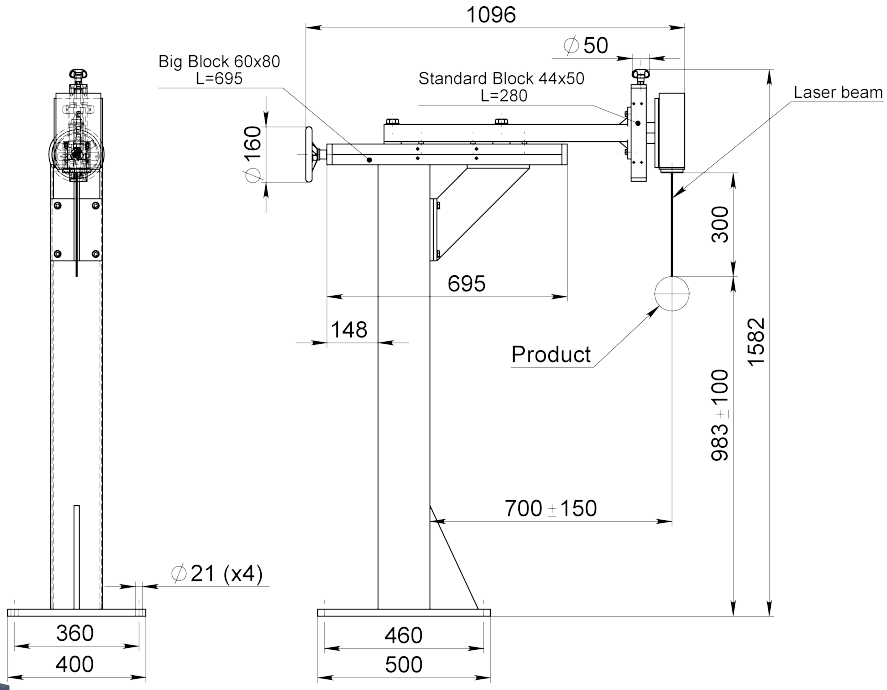

Article: 08077



Contactless Length counter Stand
Article**: 8077**

Optional guiding system:
Article**: 0065**, Iris guide
Article**: 8140**, Stand for Iris guide

Article: 00065

Article: 08140

Drawing No. 3-300111-01

Subec AB **Hesselmans Torg 5** **SE- 131 54 Nacka** **Sweden** **Phone: +46-8-88 46 33** **Email: info@subec.se** **Web: www.subec.se**

Copyright © 2026 Subec

IRIS GUIDE AND STAND ASSEMBLY FOR LASER LENGTH COUNTER

Height: 1000mm

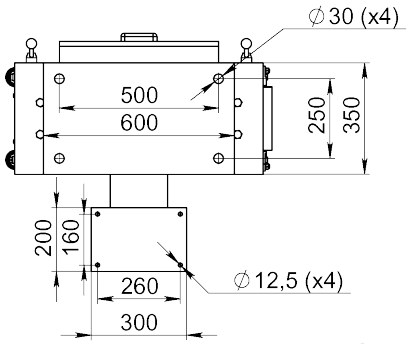

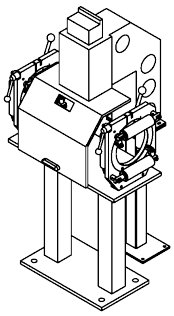

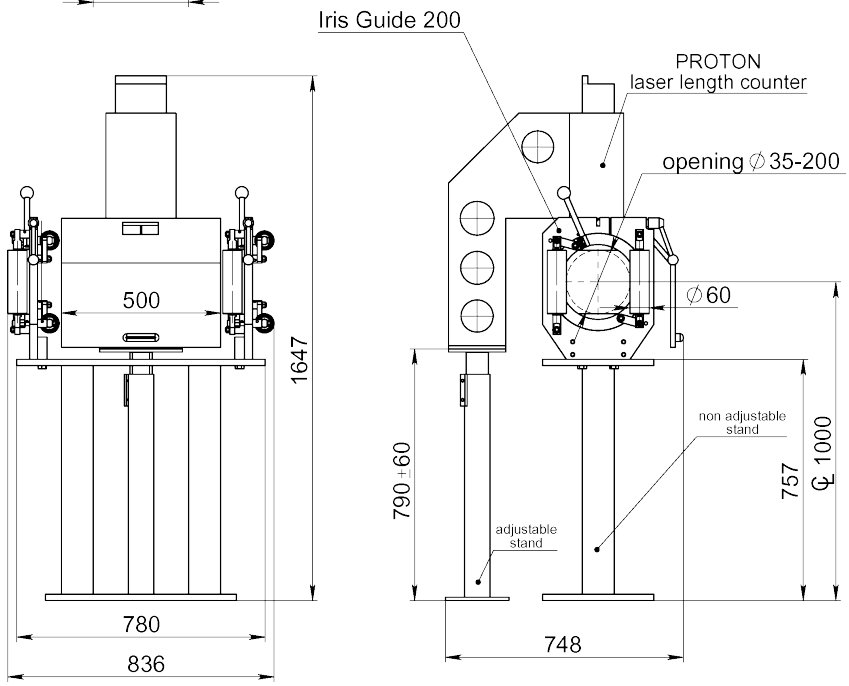

Article: 07712



Drawing No. 3-400953-00

Subec AB **Hesselmans Torg 5** **SE- 131 54 Nacka** **Sweden** **Phone: +46-8-88 46 33** **Email: info@subec.se** **Web: www.subec.se**

Copyright © 2026 Subec

HEIGHT ADJUSTABLE STAND

Height: 1000 +- 100mm

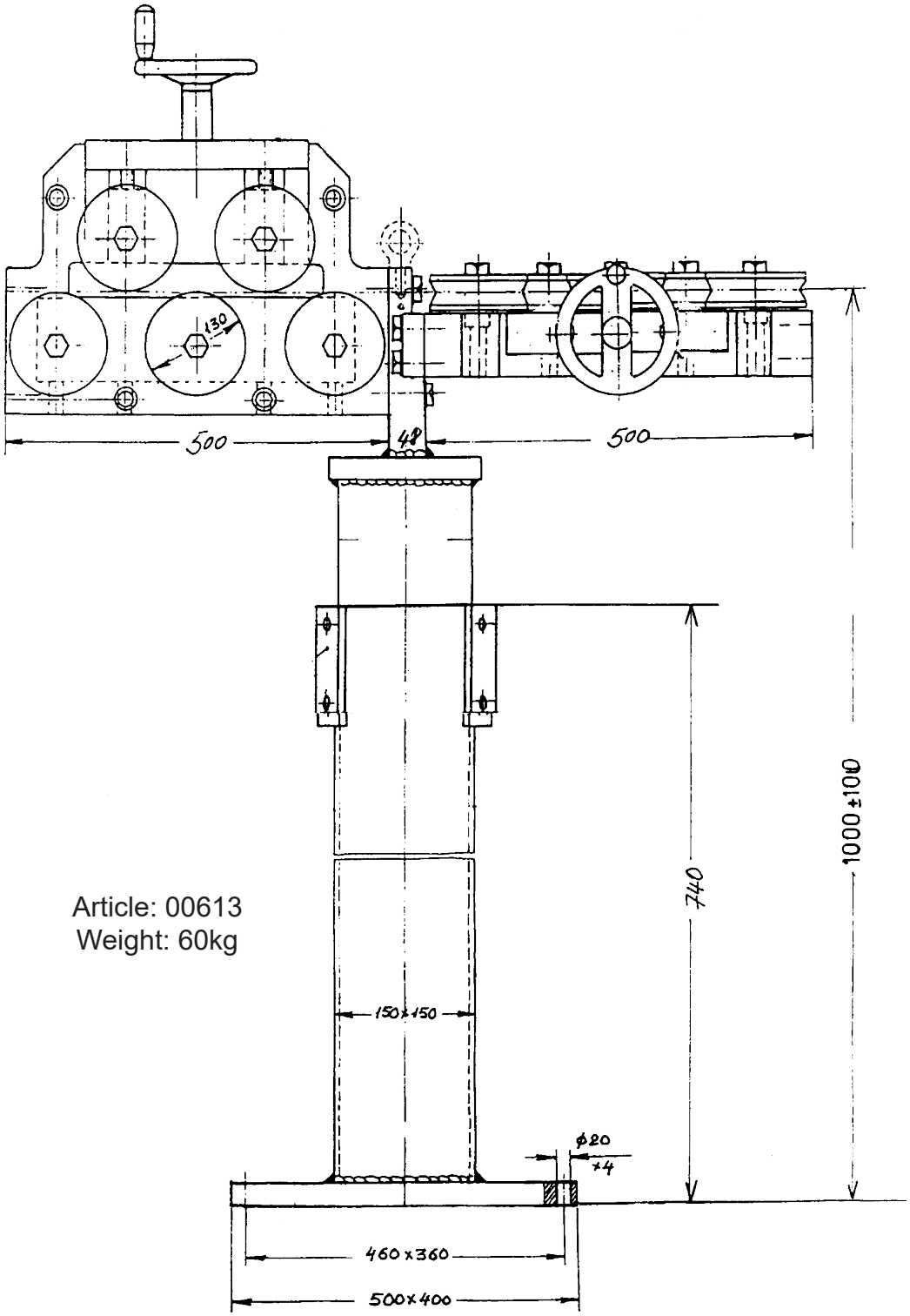

Article: 00613
Weight: 60kg

Drawing No. 3-300111-01

Subec AB **Hesselmans Torg 5** **SE- 131 54 Nacka** **Sweden** **Phone: +46-8-88 46 33** **Email: info@subec.se** **Web: www.subec.se**

Copyright © 2026 Subec

HEIGHT ADJUSTABLE STAND WITH TRAVERS UNIT

Height: 1000 +- 100mm

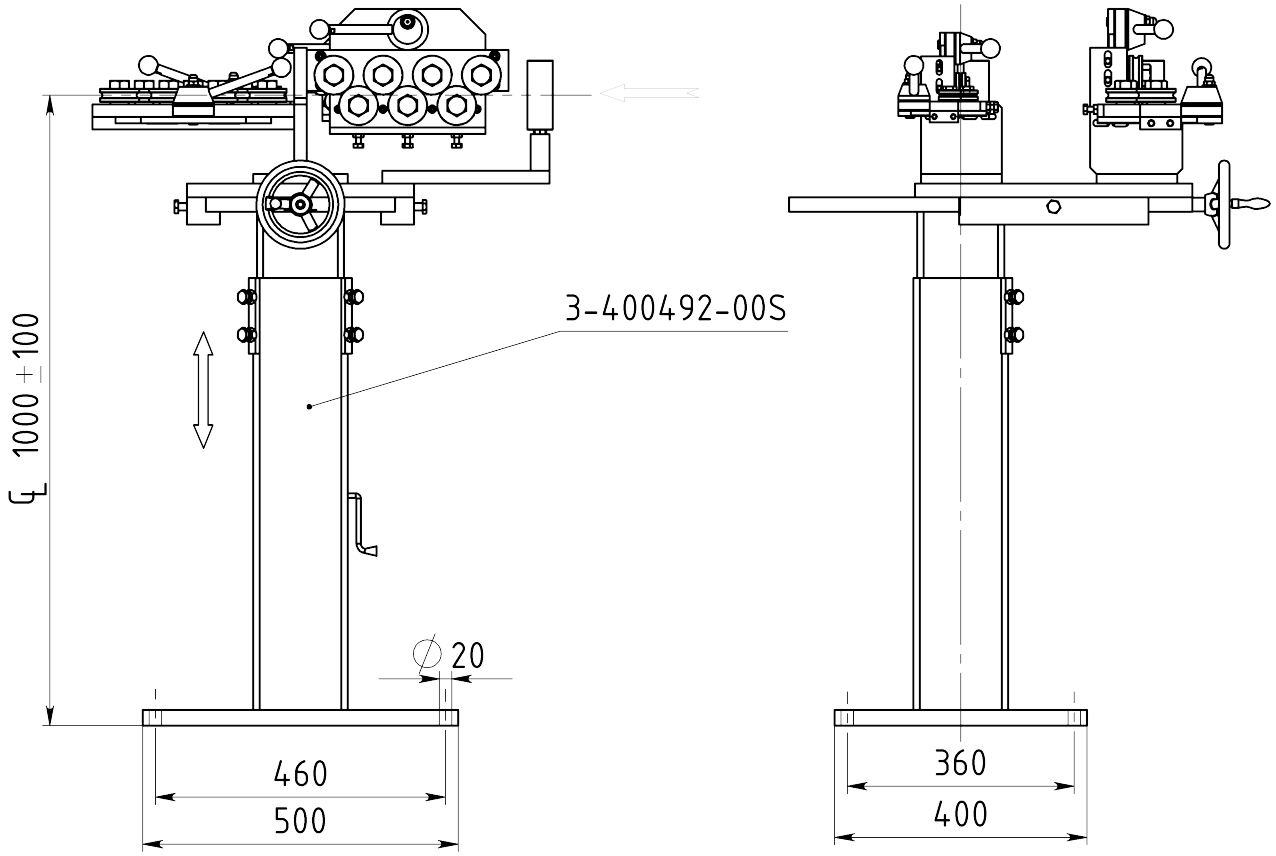

Article: 01589
Weight: 74kg

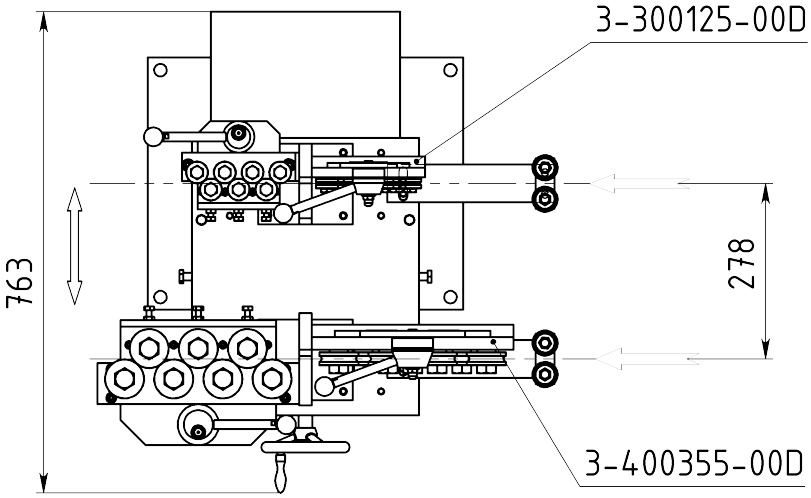

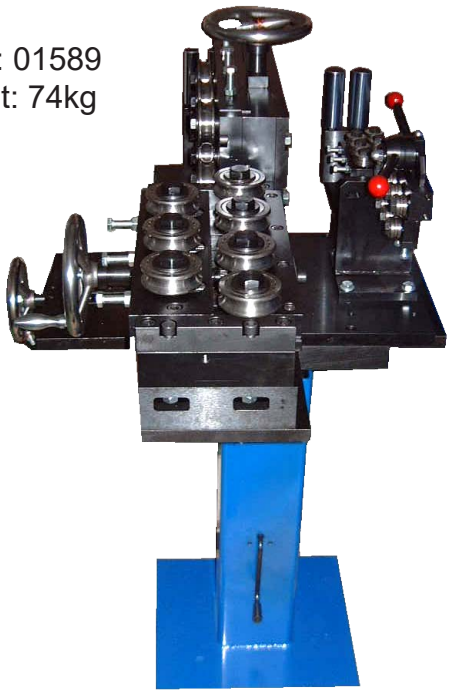

Drawing No. 3-400461-00

Subec AB
Hesselmans Torg 5
SE- 131 54 Nacka
Sweden
Phone: +46-8-88 46 33
Email: info@subec.se
Web: www.subec.se

Copyright © 2026 Subec

HEIGHT ADJUSTABLE STAND WITH TRAVERS UNIT

Height: 1000 +- 60mm

Article: 04985
Weight: 68kg



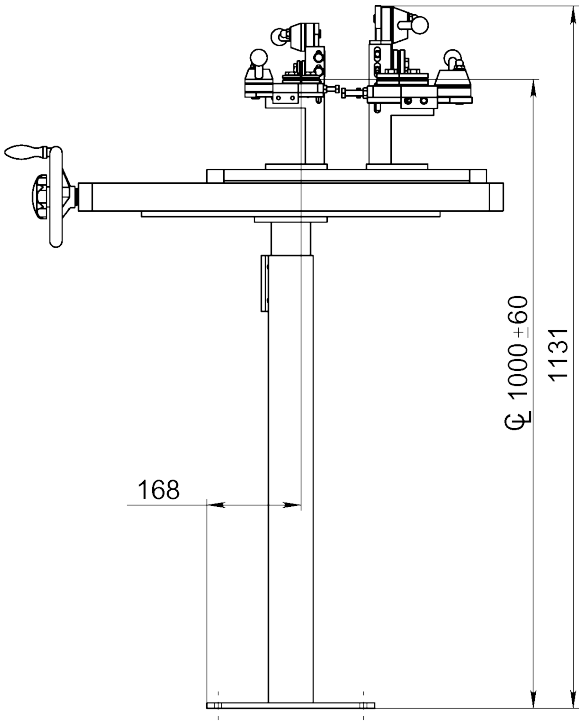

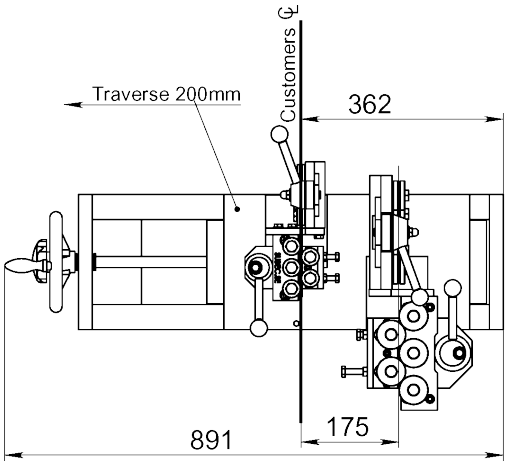

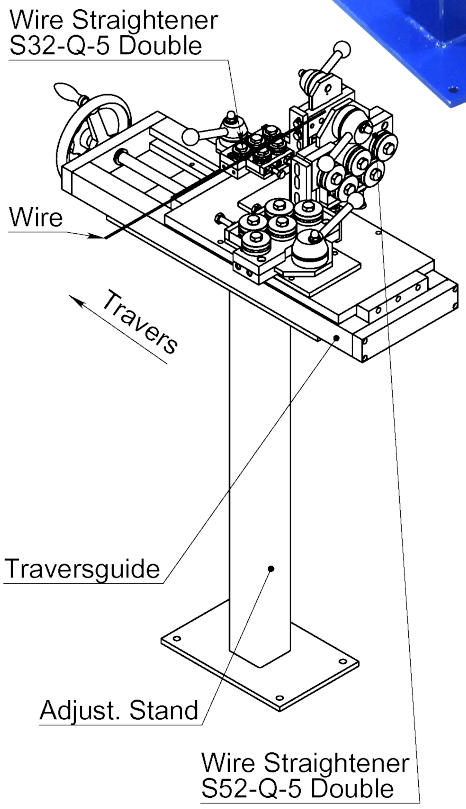

Drawing No. 3-300135-01

Subec AB **Hesselmans Torg 5** **SE- 131 54 Nacka** **Sweden** **Phone: +46-8-88 46 33** **Email: info@subec.se** **Web: www.subec.se**

Copyright © 2026 Subec

HEIGHT ADJUSTABLE STAND

Height: 1000 +- 140mm

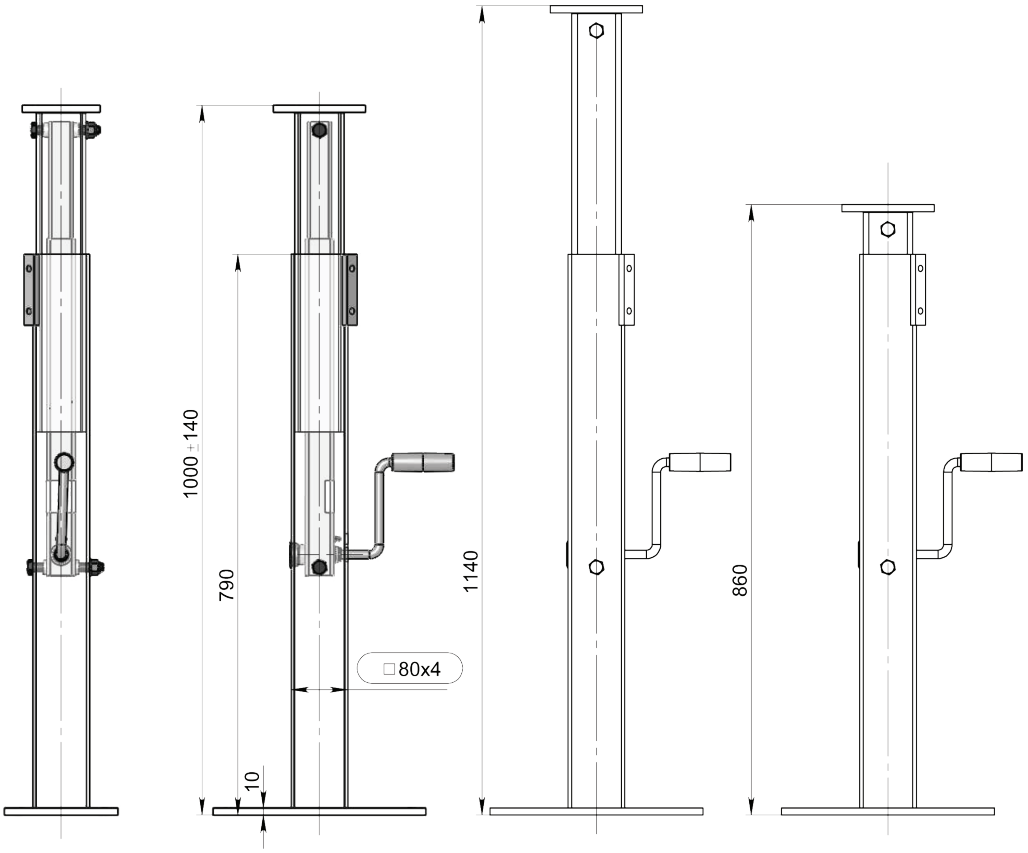

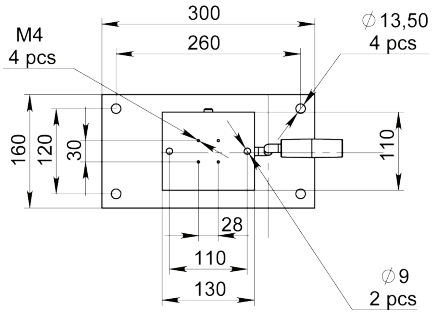



Article: 13436A
Weight: 22kg

Info:
Max vertical static load: 500kg

For more heavy duty applications see article: 02016

Drawing No. 3-401518-00

Subec AB **Hesselmans Torg 5** **SE- 131 54 Nacka** **Sweden** **Phone: +46-8-88 46 33** **Email: info@subec.se** **Web: www.subec.se**

Copyright © 2026 Subec

HEIGHT ADJUSTABLE WHEEL STAND

Height: 1065 +- 100mm

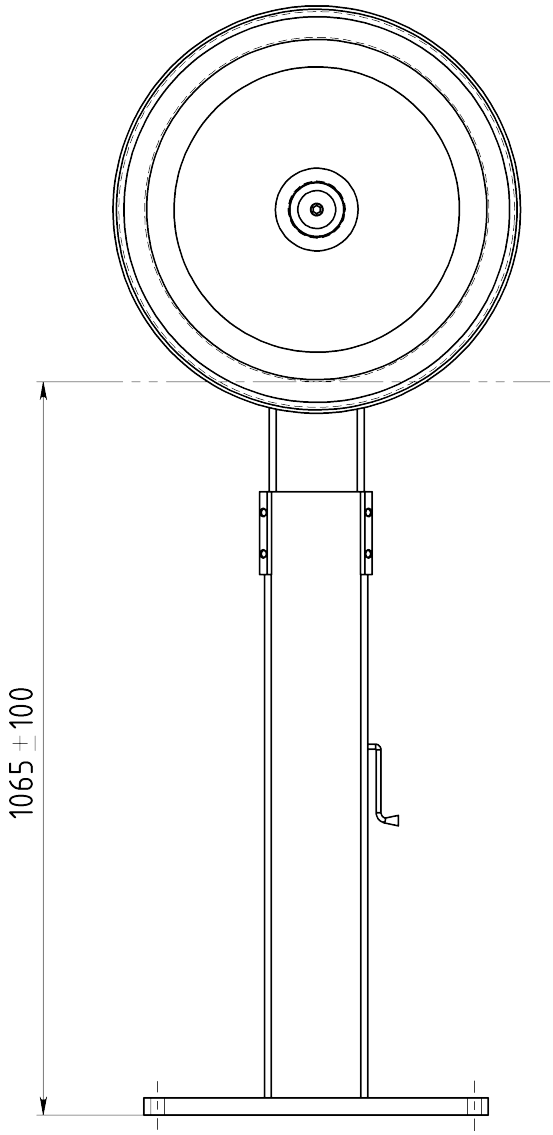

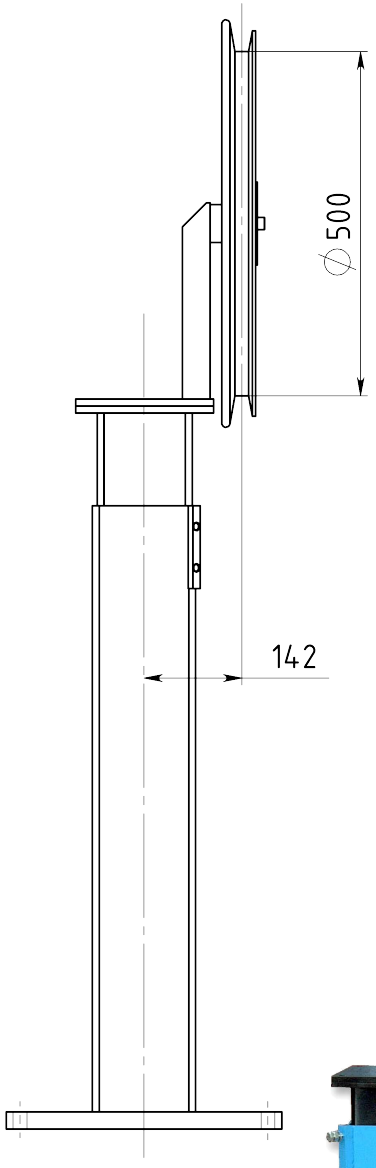

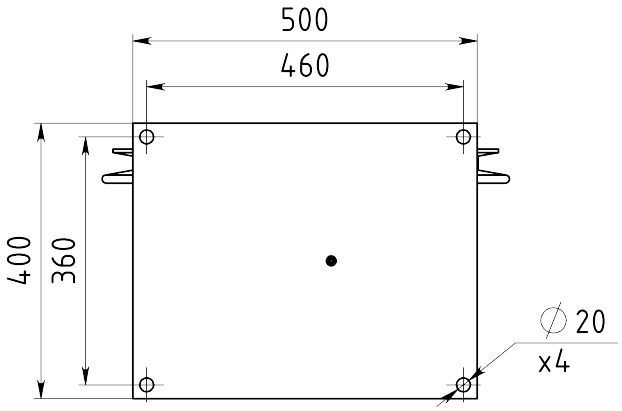

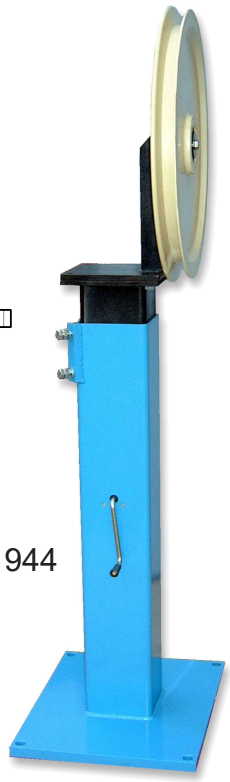

Article: 01944

Drawing No. 3-400461-04

Subec AB **Hesselmans Torg 5** **SE- 131 54 Nacka** **Sweden** **Phone: +46-8-88 46 33** **Email: info@subec.se** **Web: www.subec.se**

Copyright © 2026 Subec

HEIGHT ADJUSTABLE STAND

Height: 1082,5 +- 117,5mm

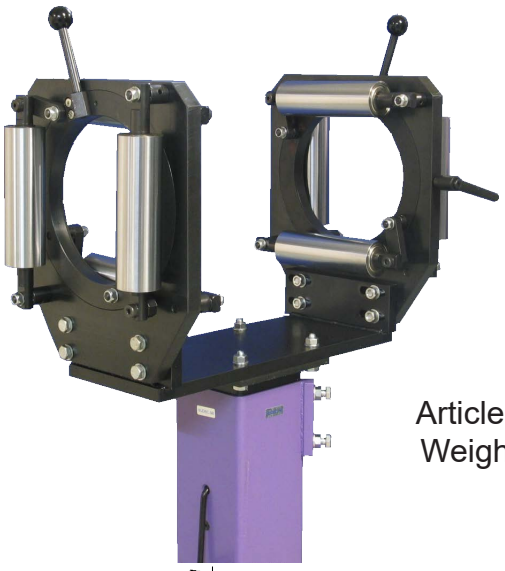

Mounting space for
measuring instrument,
ie. contactless length counter

Article: 05363
Weight: 21kg

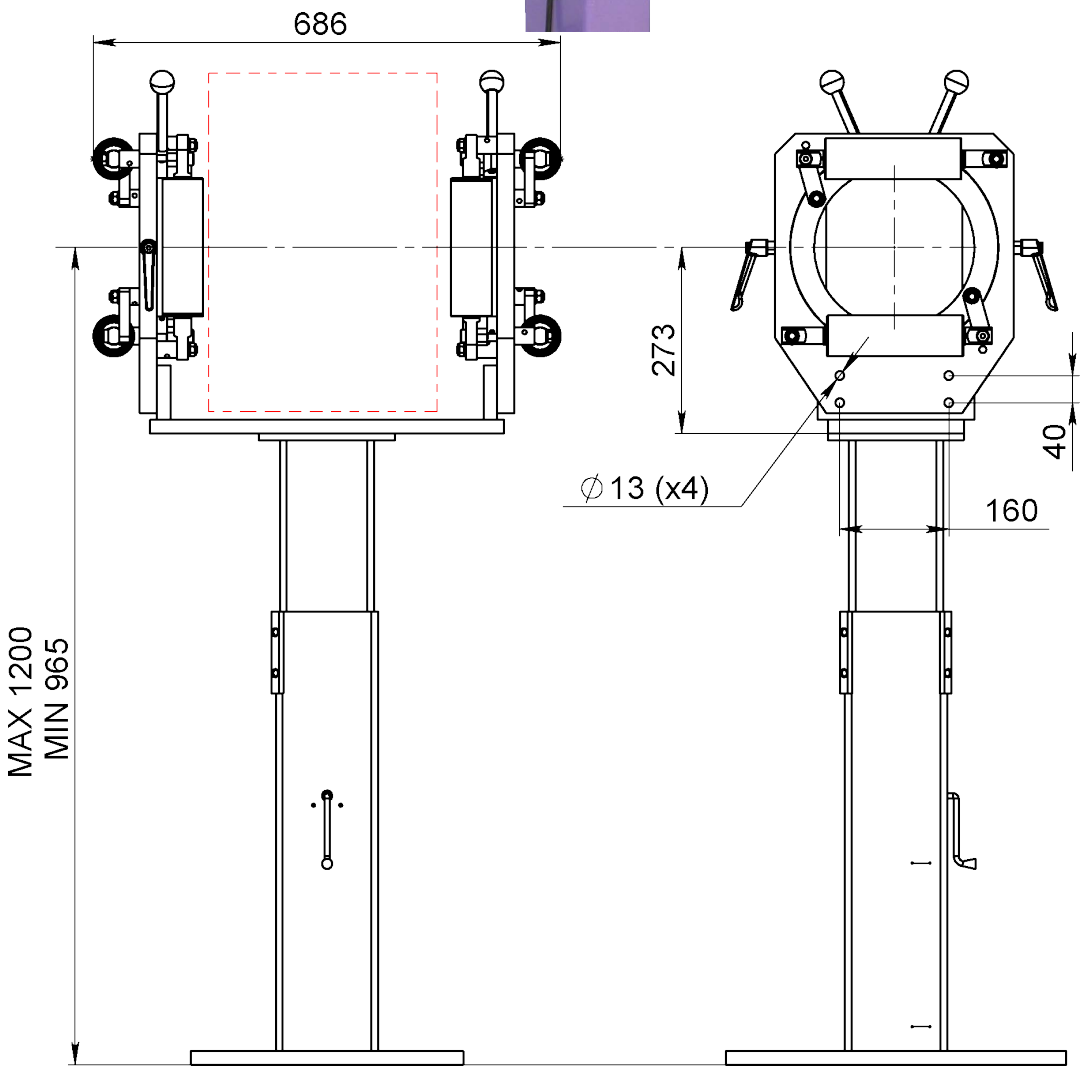

Drawing No. 3-400461-00

Subec AB **Hesselmans Torg 5** **SE- 131 54 Nacka** **Sweden** **Phone: +46-8-88 46 33** **Email: info@subec.se** **Web: www.subec.se**

Copyright © 2026 Subec

HEIGHT ADJUSTABLE STAND

Height: 1100 +- 300mm



Article: 0669

Option: Simple adjustment lifting with thread rod

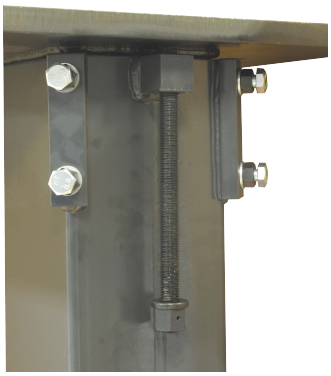

Article: 09086
Weight: 67kg

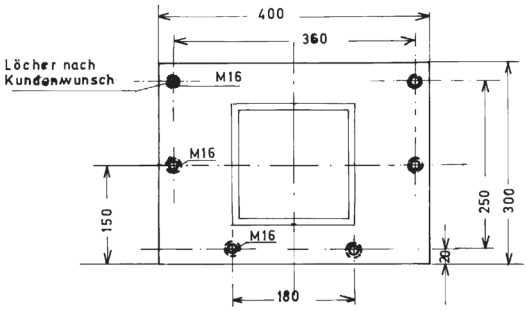

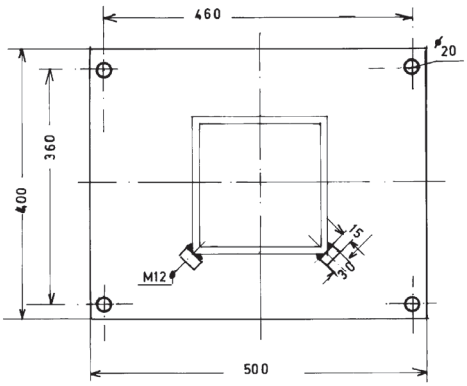

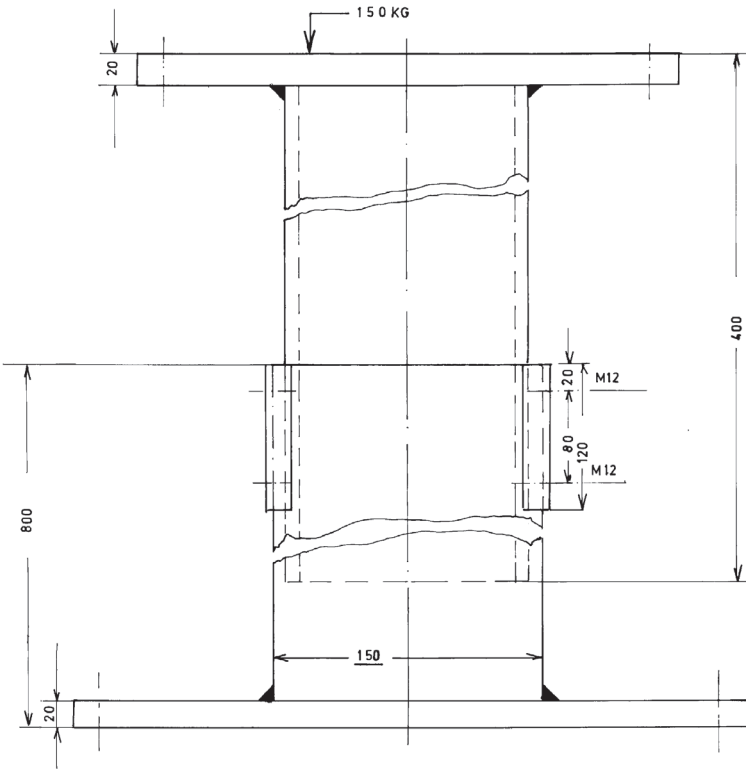

Drawing No. 1-300110-00

Subec AB **Hesselmans Torg 5** **SE- 131 54 Nacka** **Sweden** **Phone: +46-8-88 46 33** **Email: info@subec.se** **Web: www.subec.se**

Copyright © 2026 Subec

HEIGHT ADJUSTABLE STAND WITH TRAVERS UNIT

Height: 1000 +- 100mm

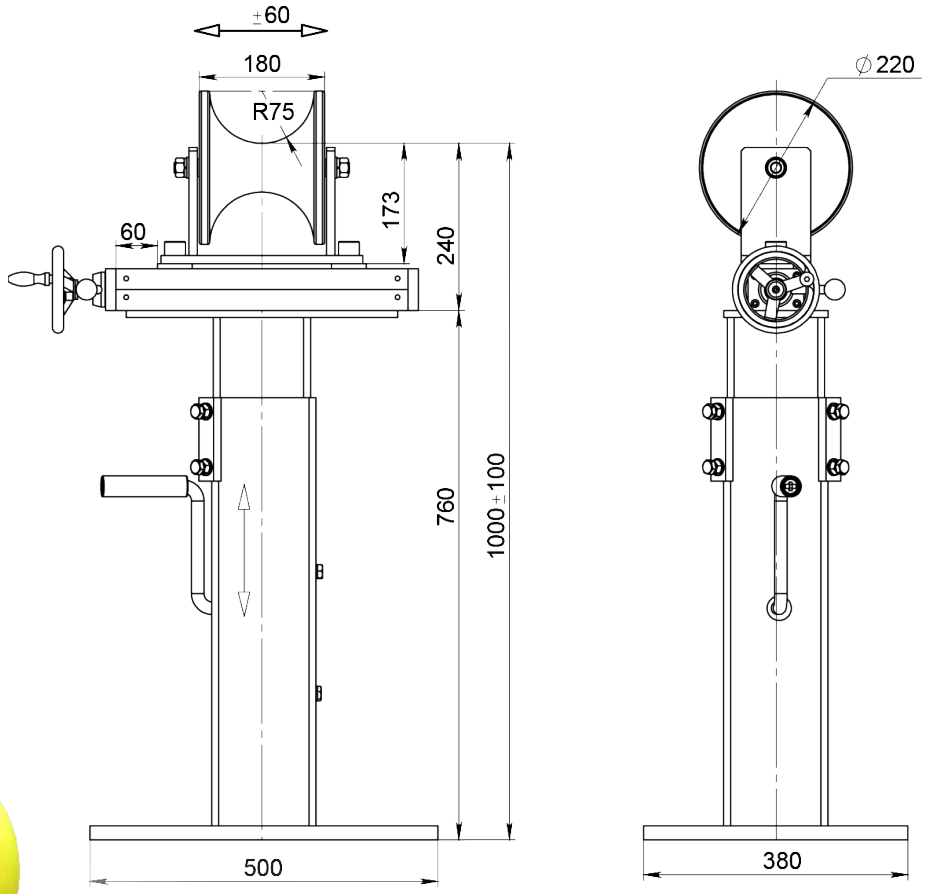



Drawing No.	Article	Description
3-300053-00	16643	Guide System
3-400652-00	5373A	Traversing unit
3-400461-07	16844	Height adjustable Stand

Subec AB **Hesselmans Torg 5** **SE- 131 54 Nacka** **Sweden** **Phone: +46-8-88 46 33** **Email: info@subec.se** **Web: www.subec.se**

Copyright © 2026 Subec

STAND
WITH BALANCED WIRE STRAIGHTENER

Height: 1250 +- 750mm

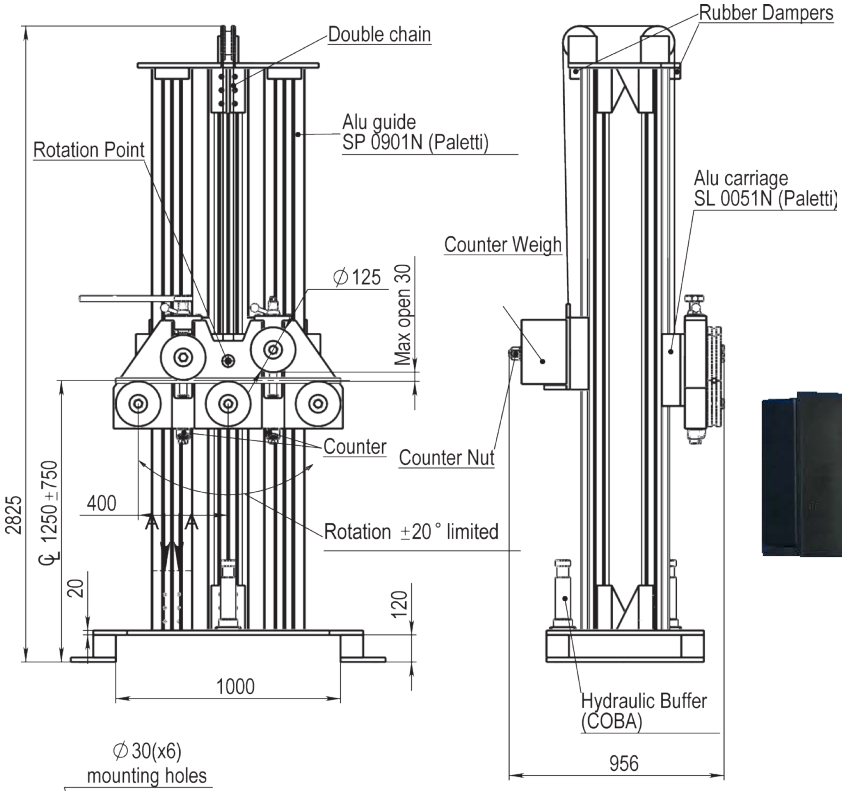

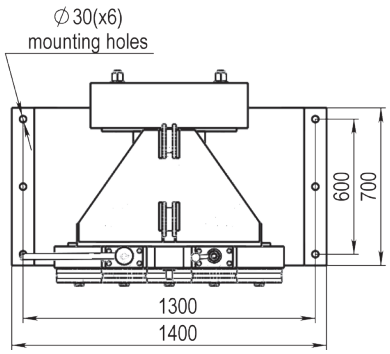

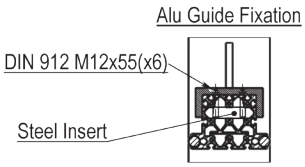

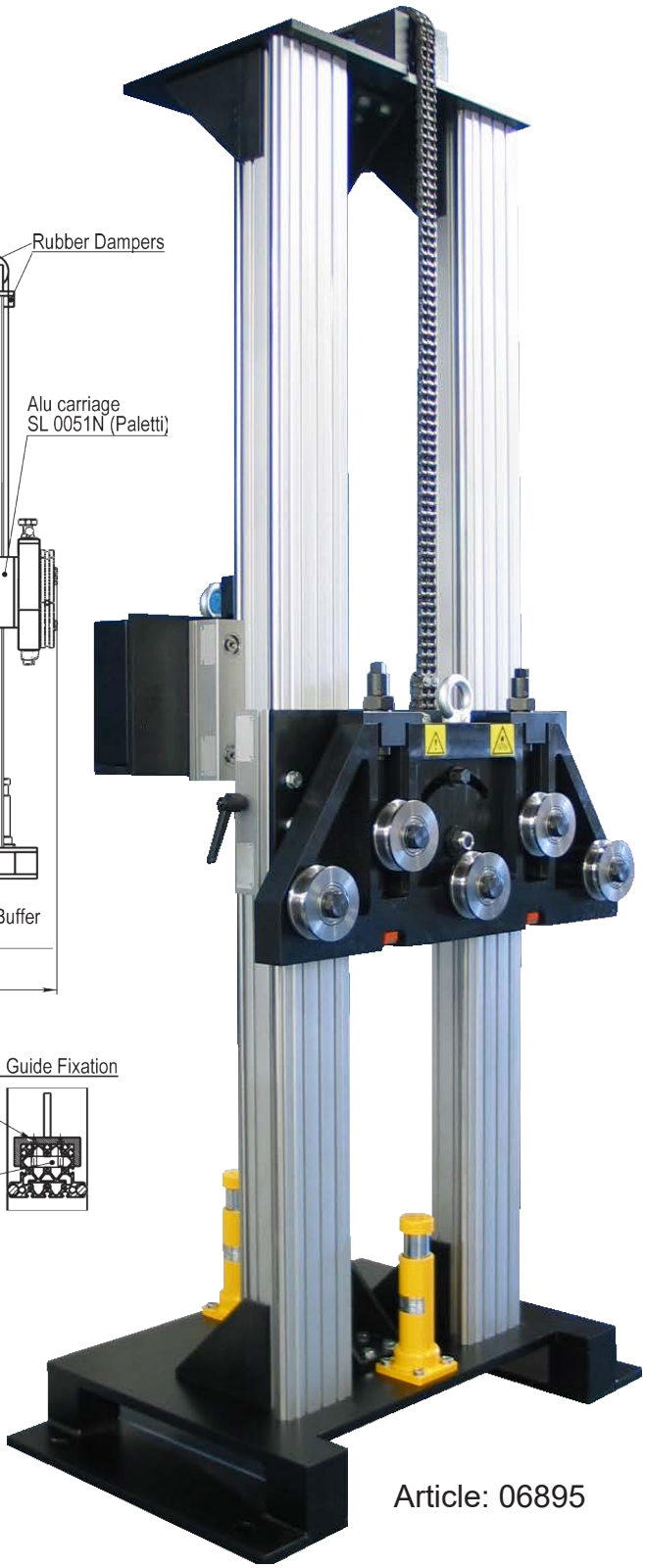

Article: 06895

Drawing No. 3-400887-00

Subec AB **Hesselmans Torg 5** **SE- 131 54 Nacka** **Sweden** **Phone: +46-8-88 46 33** **Email: info@subec.se** **Web: www.subec.se**

Copyright © 2026 Subec

SMALL SHEAVE

Material: PA-6, Hardened Steel

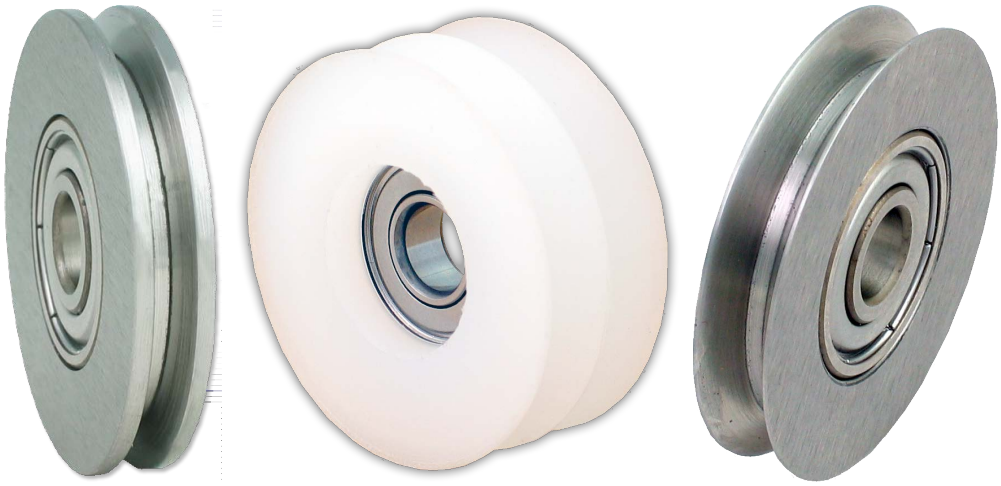

Type 1

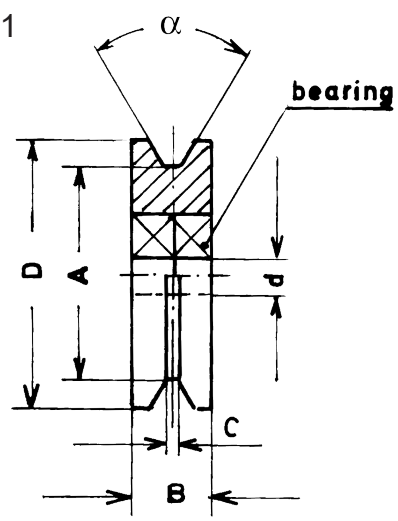

Type 2

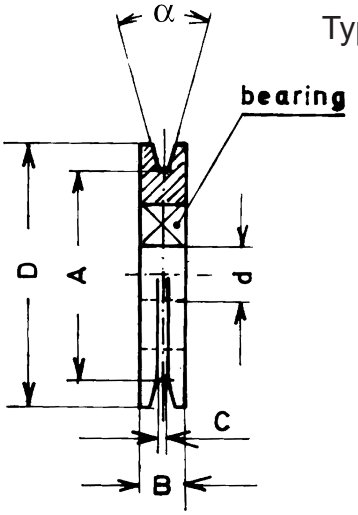

Article	ØD	Ød	ØA	α	B	C	Material	Coating	Type	Weight
00617*	40						PA 6-G		1	0,03kg
00619	40						PA 6-G		2	
06261	40	8	32	60°	7	1,5	HM		2	
02151*	40	8	32	50°	7	1,5	HRC		2	0,05kg
03064	47	15	44,5		11	4	HRC		2	
01738	60	5	52	30°	16	1,5	POM		1	
04076	68	6	56	30°	10	1,5	HRC		1	
03839*	80	12	62		12	3	HRC		2	0,36kg
03947*	80	10	62	30°	16	8	Steel		1	0,44kg
01739	80	8	74	30°	22	1,5	POM		1	
06466	80	10	62		16	8	HRC		1	0,40kg
03782	80	10	62	30°	16	8	Aluminium		1	
06907*	85	15	79		13		Aluminium	CR203	2	0,17kg

Drawing No. 1-400392-01

* Stock item

Subec AB **Hesselmans Torg 5** **SE- 131 54 Nacka** **Sweden** **Phone: +46-8-88 46 33** **Email: info@subec.se** **Web: www.subec.se**

Copyright © 2026 Subec

SMALL SHEAVE

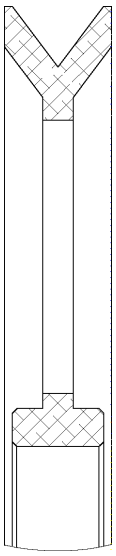

Type 1

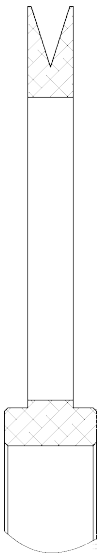

Type 2

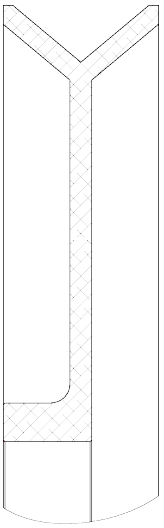

Type 3

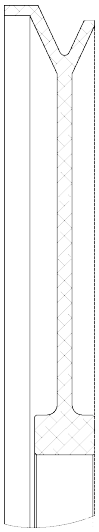

Type 4



Article: 12171*

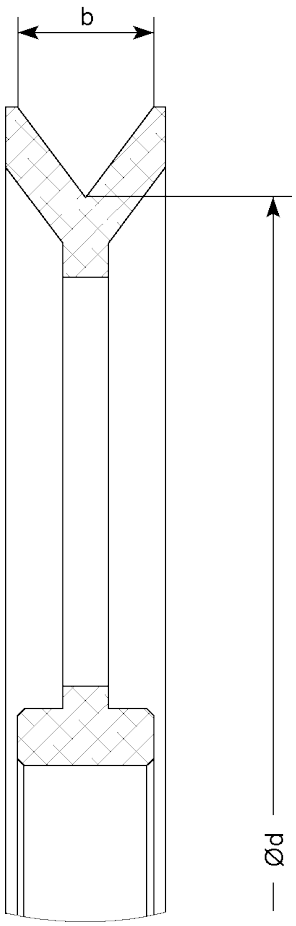

Article	Ød	V-Groove	b	Material	Coating	Type	Remark
13501*	50	90°	4	Alu	Cr_2O_3	1	Weight reduction holes
13503*	50	90°	8	Alu	Cr_2O_3	1	
12171*	60	35°	2,5	Alu	-	2	Weight reduction holes
12340	60	35°	2,5	Alu	ZrO_2	2	Weight reduction holes
12170*	60	35°	2,5	Alu	-	2	
12341	60	35°	2,5	Alu	ZrO_2	2	
13607	60	73,74°	6	Alu	Cr_2O_3	1	Weight reduction holes
14945*	60	73,74°	6	Alu	Tungsten Carbide	1	Weight reduction holes
14143A*	88,7	50,9	7	Alu	-	4	Nested
12168*	90	50°	4,3	Alu	-	4	Nested
12342	90	50°	4,3	Alu	ZrO_2	4	Nested

Drawing No. 3-401316-00

* Stock item

Subec AB **Hesselmans Torg 5** **SE- 131 54 Nacka** **Sweden** **Phone: +46-8-88 46 33** **Email: info@subec.se** **Web: www.subec.se**

Copyright © 2026 Subec

SMALL SHEAVE

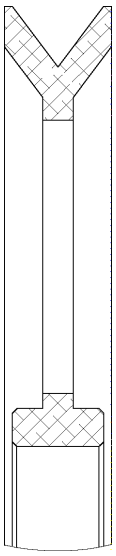

Type 1

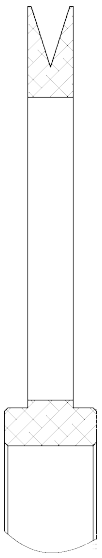

Type 2

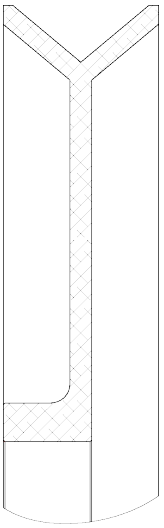

Type 3

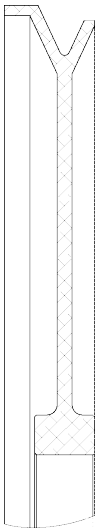

Type 4



Article: 12171*

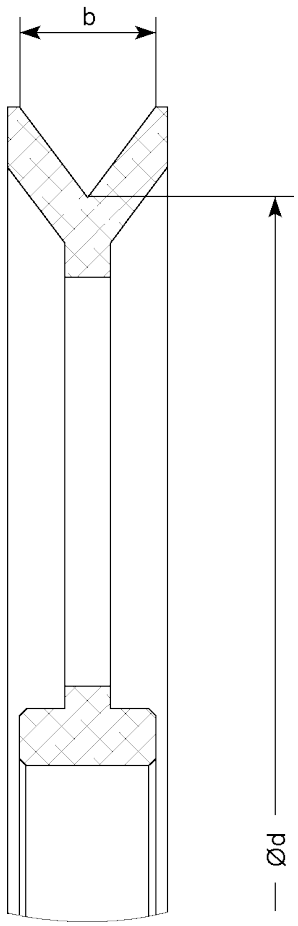

Article	Ød	V-Groove	b	Material	Coating	Type	Remark
12474*	90	50°	4,3	Alu	CrN	4	Nested
14775*	90	65°	5	Alu	Anodized	4	Nested
13600	90	100°	14,3	Alu	Anodized	3	
12166*	92	110°	7,1	Alu	-	3	
12343	92	110°	7,1	Alu	ZrO_2	3	

Drawing No. 3-401316-00

* Stock item

Subec AB **Hesselmans Torg 5** **SE- 131 54 Nacka** **Sweden** **Phone: +46-8-88 46 33** **Email: info@subec.se** **Web: www.subec.se**

Copyright © 2026 Subec

SHEAVE PA6

Material: PA6-G Natural



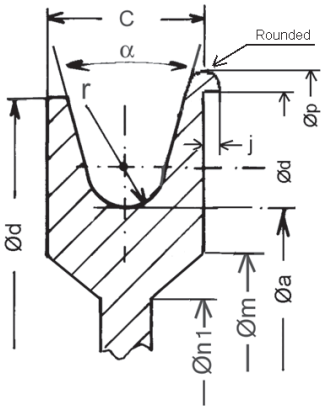

Execution 3

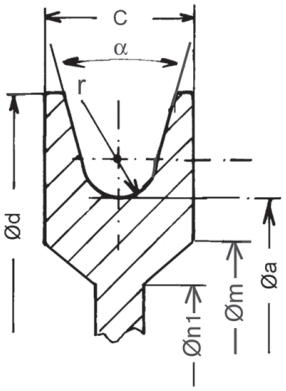

Execution 2

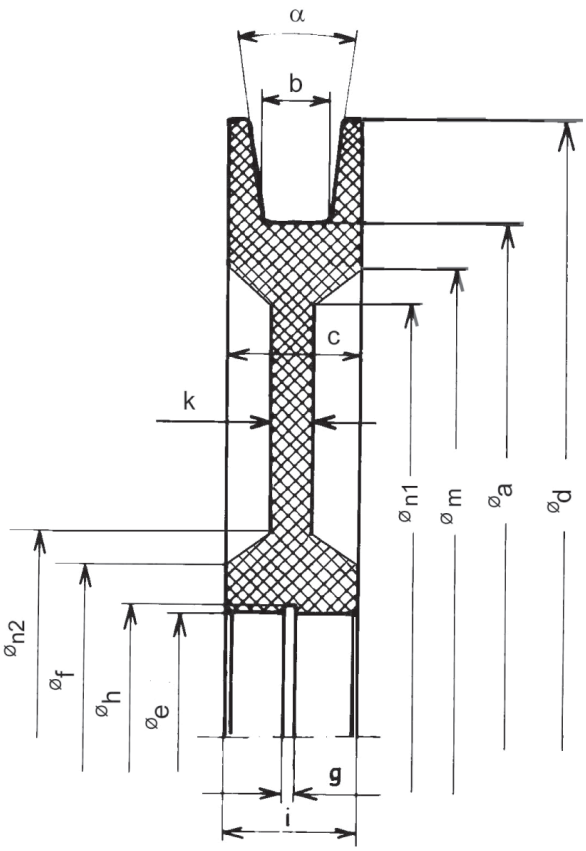

Execution 1

Standard dimensions, other sizes upon request

Article	Øa	b	r	c	Ød	Øe	Øf	Øm	Øn1	Øn2	g	Øh	i	j	k	α	For bearing	Weight [kg]
14109	102	-	2	14	130	30	45	-	93	-	-	-	-	-	6	28	61903-2Z	0,12
01504*	140	-	5	18	180	32	50	120	120	50	1,3	33,7	18	-	6	15°	6002-2Z	0,5
00634*	140	12	5	30	160	55	75	120	-	-	-	58	-	-	6	0°	-	0,38
01505*	200	-	5	18	230	32	55	190	55	50	1,3	33,7	18	-	8	10°	6002-2Z	0,52
08342*	200	-	8	28	250	32	50	170	150	70	1,3	33,7	28	-	10	10°	6002-2Z	1,1
06970*	200	12	-	18	230	32	50	170	-	-	-	33,7	-	-	8	10°	-	0,45
01683*	200	5	-	18	230	28	50	160	-	-	-	29,5	-	-	12	10°	-	0,63
13510*	200	6	-	15	230	28	50	170	-	-	-	29,5	-	-	8	6°	-	0,53
06853*	200	10	-	18	230	32	50	170	-	-	-	33,7	-	-	8	10°	-	0,48
03937*	200	14,5	-	26,5	260	47	-	-	-	-	5	40	-	-	26,5	10°	-	1,1
02586	220	-	5	18	250	32	50	200	180	70	1,3	33,7	18	-	10	10°	6002-2Z	0,64
07545*	220	-	5	20	250	32	60	200	190	70	1,3	33,7	18	2	8	30°	6002-2Z	0,6

Drawing No. 1-400385-01

* Stock item

Subec AB **Hesselmans Torg 5** **SE- 131 54 Nacka** **Sweden** **Phone: +46-8-88 46 33** **Email: info@subec.se** **Web: www.subec.se**

Copyright © 2026 Subec

SHEAVE PA6

Material: PA6-G Natural



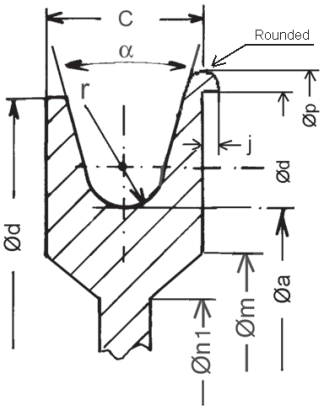

Execution 3

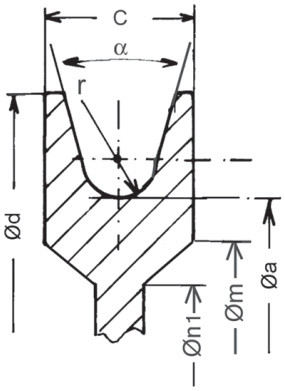

Execution 2

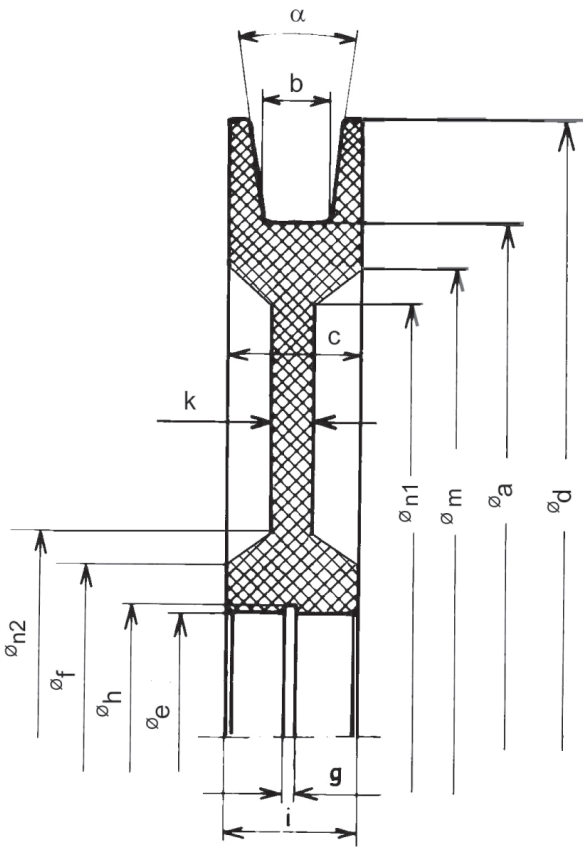

Execution 1

Standard dimensions, other sizes upon request

Article	Øa	b	r	c	Ød	Øe	Øf	Øm	Øn1	Øn2	g	Øh	i	j	k	α	For bearing	Weight [kg]
06266*	220	-	3	37	250	55	85	199	199	85	2,15	58	37	-	17	61°	6006Z	1,3
04021*	250	-	3	30	280	47	70	230	210	90	1,85	49,5	30	-	12	50°	6202-2Z	1,25
01655*	270	-	5	20	300	32	60	255	255	60	1,3	33,7	20	-	7	30°	6002-2Z	0,7
07450*	270	10	-	20	300	32	60	255	-	-	-	33,7			7	15°	-	0,74
07519	270	-	5	20	300	32	60	255	255	60	1,3	33,7	20	-	7	30°	6002-2Z	0,7
01656*	270	-	5	20	300	37	60	255	255	60	1,6	39	20	-	7	30°	6904-2Z	0,7
05415*	290	25	12,5	30	320	55	75	270	-	-	-	58	-	-	10	-	-	1,1
04448*	288	-	6	25	330	90	130	280	255	145	3,15	93,5	30	4	10	30°	16011	1,2
01487*	300	-	7,5	30	340	55	75	260	260	75	2,15	58	30	-	10	10°	6006-2Z	1,7
00662*	300	15	-	30	340	55	75	280	260	95	2,15	58	30	-	10	10°	6006-2Z	1,5
04511*	330	30	-	45	380	80	110	290	290	110	2,65	83,5	45	-	12	10°	various	2,4
09781	330	-	15	45	380	80	110	290	290	110	2,65	83,5	45	5	12	10°	6006-2Z	2,4

Drawing No. 1-400385-01

* Stock item

Subec AB **Hesselmans Torg 5** **SE- 131 54 Nacka** **Sweden** **Phone: +46-8-88 46 33** **Email: info@subec.se** **Web: www.subec.se**

Copyright © 2026 Subec

SHEAVE PA6

Material: PA6-G Natural



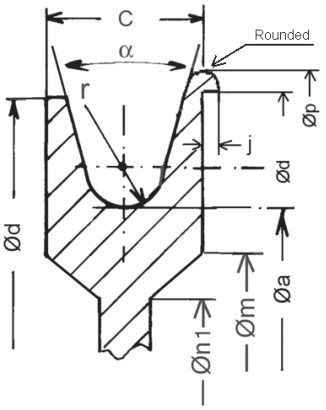

Execution 3

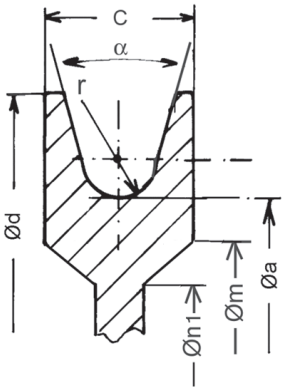

Execution 2

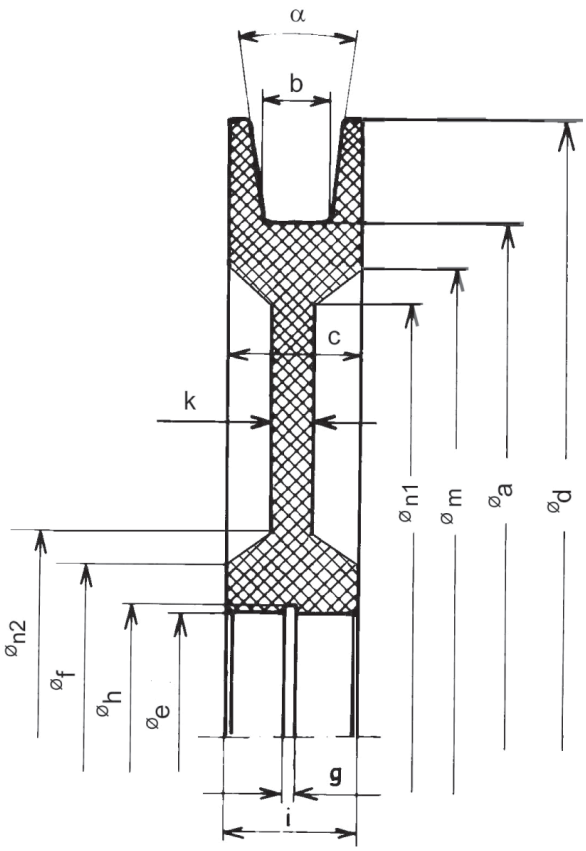

Execution 1

Standard dimensions, other sizes upon request

Article	Øa	b	r	c	Ød	Øe	Øf	Øm	Øn1	Øn2	g	Øh	i	j	k	α	For bearing	Weight [kg]
04962*	360	15	-	30	400	55	75	330	310	95	2,15	58	30	-	10	10°	6006-2z	2,1
07644*	370	-	10	45	395	55	75	330	310	95	2,15	58	45	-	-	15°	6006-2z	3,5
07831*	390	25	12,5	30	420	55	85	370	-	-	-	58	-	-	10	-	-	2,0
00542*	400	-	7,5	30	440	55	85	370	370	85	2,15	58	30	-	10	10°	6006-2Z	2,7
03269*	400	15	-	30	440	55	85	370	370	85	2,15	58	30	-	10	10°	6006-2Z	2,4
04320*	475	-	12,5	38	545	80	120	475	460	135	0	0	38	6	12	10°	6010	4,26
07242*	500	-	10	30	540	68	90	480	470	100	2,65	71	30	-	10	10°	6008	4,3
02745	500	25	-	38	550	55	103	492	472	93	2,15	58	38	-	20	10°	6006-2Z	5,4
07591	600	27	-	47	672	80	110	590	560	140	5	71	47	-	15	10°	6307-2Z	7,5
03586	800	-	16	45	870	150	250	750	750	250	0	0	32	-	20	8°	61824-2Z	15,6

Drawing No. 1-400385-01

* Stock item

Subec AB **Hesselmans Torg 5** **SE- 131 54 Nacka** **Sweden** **Phone: +46-8-88 46 33** **Email: info@subec.se** **Web: www.subec.se**

Copyright © 2026 Subec

SHEAVE ABS

Material: ABS-Plastic

Execution 1 Execution 2 Execution 3

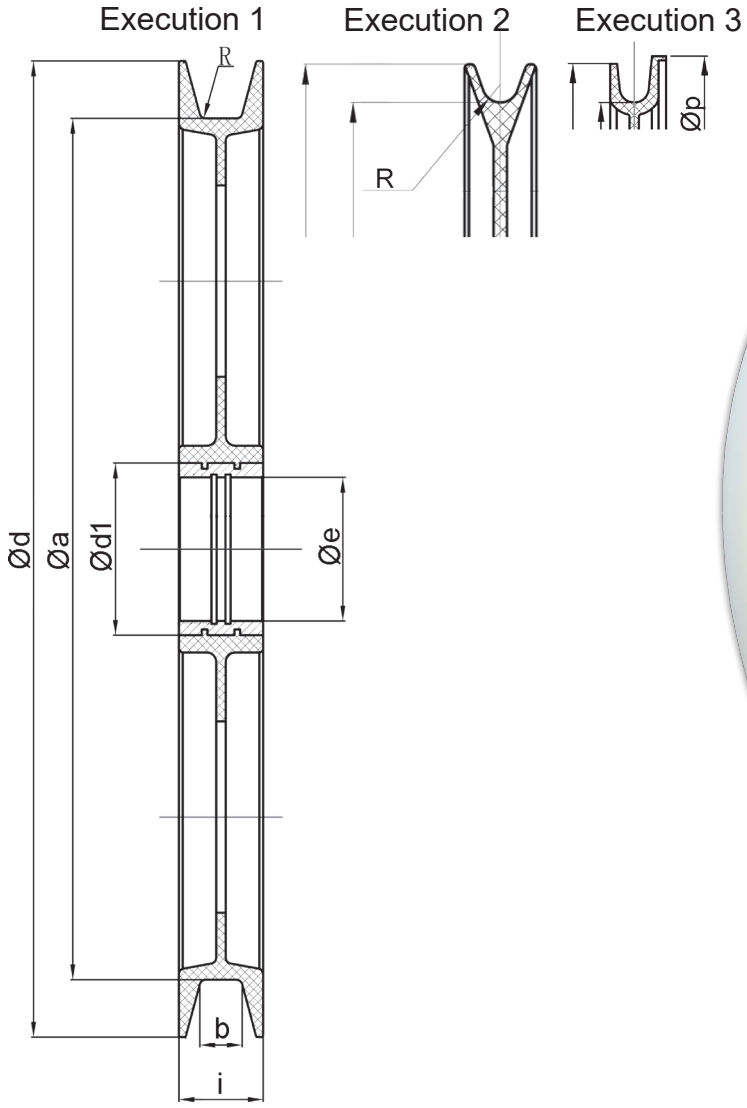



Article	Ød	Øa	Ød1	Øe	b	i	R	Øp	Weight	Execution
07349*	217	200		24	12	16			0,211kg	1
07235*	270	240		32	13,5	22	4		0,345kg	3
012563	300	270		47	10	16	1		0,37kg	3
13706*	381	350		55	18	26		390	0,9kg	3
07351*	400	364		55	16,5	26	6,8		0,88kg	3
07352A	510	450		75	22	44				1
07232*	550	500		55	20	28			2,0kg	1

Drawing No. 3-400925-00

* Stock item

Subec AB **Hesselmans Torg 5** **SE- 131 54 Nacka** **Sweden** **Phone: +46-8-88 46 33** **Email: info@subec.se** **Web: www.subec.se**

Copyright © 2026 Subec

GUIDE ROLLERS

Material: Various materials and coatings

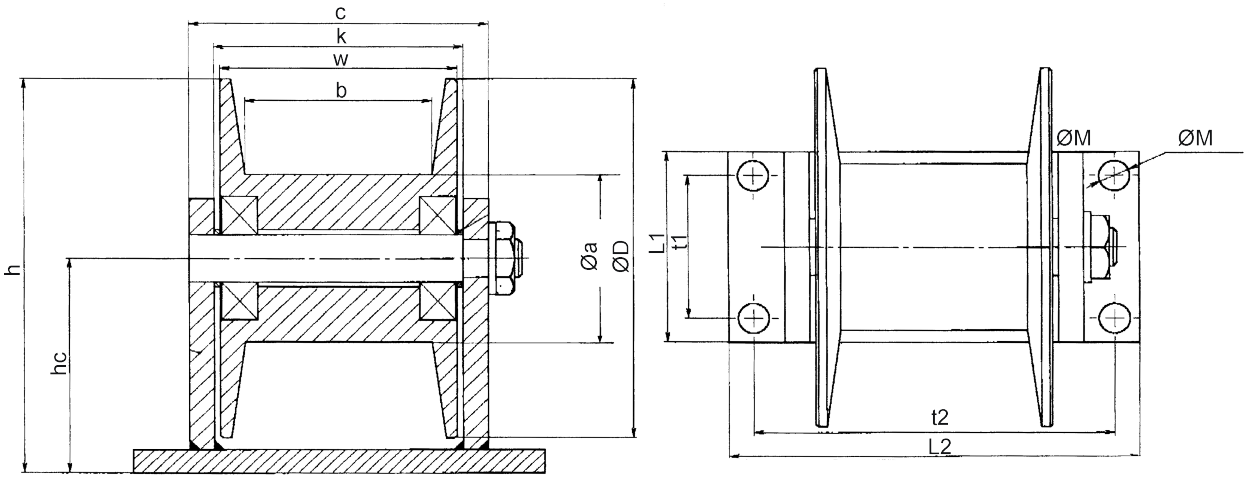

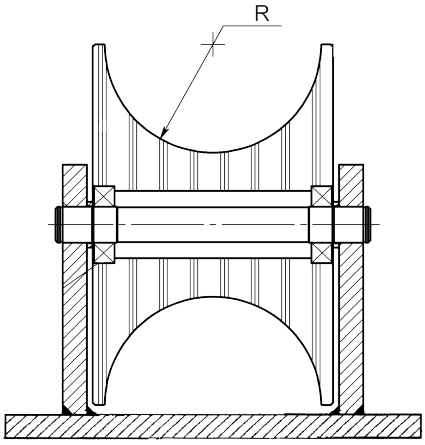

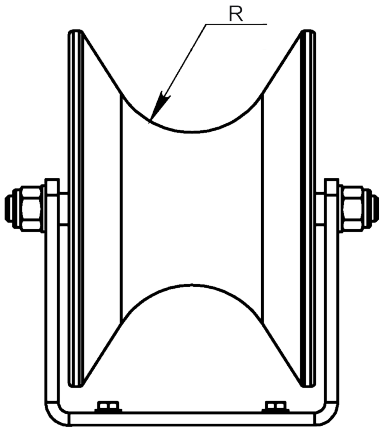









Article	L1	t1	L2	t2	ØM	h	hc	ØD	Øa	c	k	w	b	R	Material	Weight
02278	70	50	140	120	12,5	115	65	100	34		80	75		33	PA6	1,9
01801*	80	60	165	145	12,5	165	90	150	60		105	100		45	PA6	3,2
03892	80	60	165	145	12,5	165	90	150	60		105	100		45	HRC	
00930	80	60	165	145	12,5	165	90	150	70	120	100	95	75		Steel	
12564	No holder							340	146	-	-	235	-	80	75 Shore A	

Drawing No. 3-300053-00

* Stock item

Subec AB **Hesselmans Torg 5** **SE- 131 54 Nacka** **Sweden** **Phone: +46-8-88 46 33** **Email: info@subec.se** **Web: www.subec.se**

Copyright © 2026 Subec

SHEAVE Ø12, 21MM

Material: Aluminium

Ceramic coated Groove

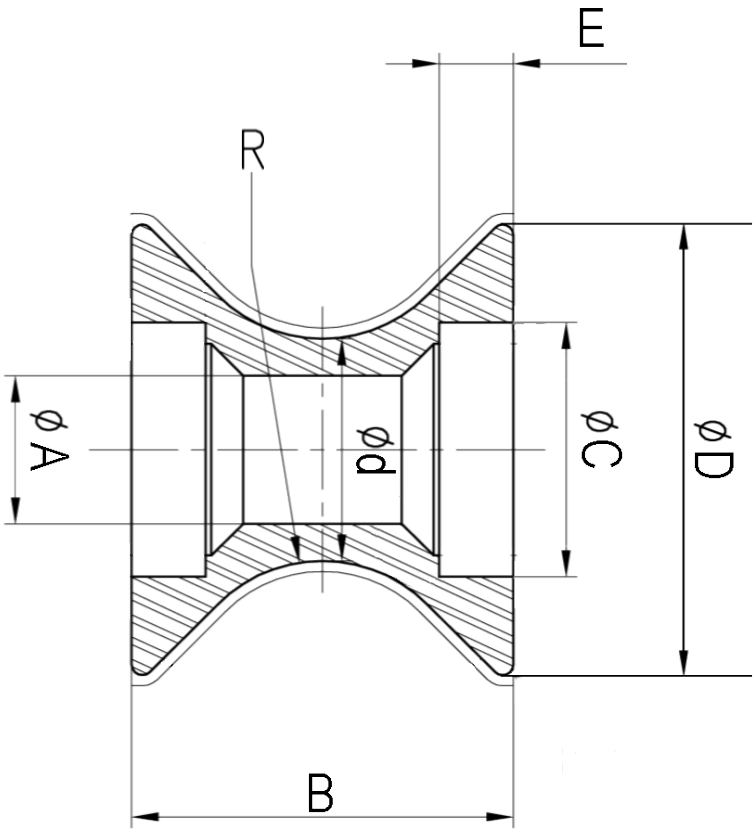

Article	Ød	ØD	ØA	B	ØC	E	R
9759*	12	30	4	23	13	5	9,25
10562*	12	45	7	36	16	5	13
10065*	21	42,6	14	36	24	7	14



Article: 10065*
Weight: 0,046kg



Article: 10562*
Weight: 0,03



Article: 9759*

* Stock item

Subec AB **Hesselmans Torg 5** **SE- 131 54 Nacka** **Sweden** **Phone: +46-8-88 46 33** **Email: info@subec.se** **Web: www.subec.se**

Copyright © 2026 Subec

CERAMIC SHEAVEØ20-50MM

Material: Ceramic ring and plastic flange



Type A: Ceramic Al2O3, 99,5%, Running surface diamand polished Ra 0,2 Plastic flanges, ballbearings fitted.

Type B: Ceramic Al2O3, 95%, Running surface polished Ra 1, Plastic flanges, ballbearings fitted.

Type C: Steel, Induction hardened groove

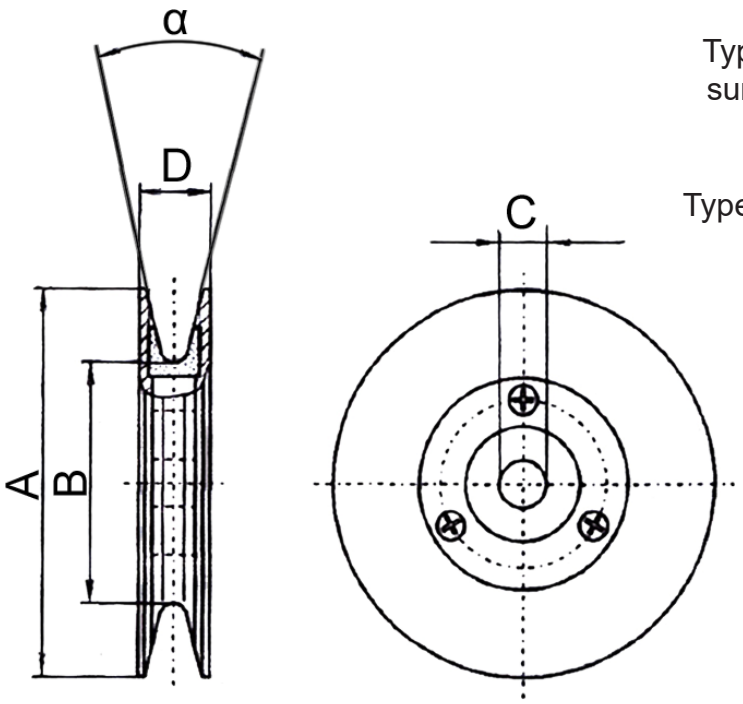

Article Type A	Article Type B	Article Type C	A	B	C	D	α	For bearing	Weight
05504	**05500***	-	80	50	10	13,5	17°	6200-2Z	0,09kg
05505	**05501***	-	60	40	8	13	40°	608-2Z	0,04kg
05506	**05502***	-	45	30	6	13	50°	626-2Z	0,02kg
-	**08270***	-	45	30	5	13	50°	635-2Z	0,02kg
05507	**13468***	-	30	20	4	6,8	30°	694-ZZ	0,01kg

Drawing No. 3-400575-01

* Stock item

Subec AB **Hesselmans Torg 5** **SE- 131 54 Nacka** **Sweden** **Phone: +46-8-88 46 33** **Email: info@subec.se** **Web: www.subec.se**

Copyright © 2026 Subec

ALU. SHEAVES WITH CERAMIC COATED GROOVES

Groove Geometries

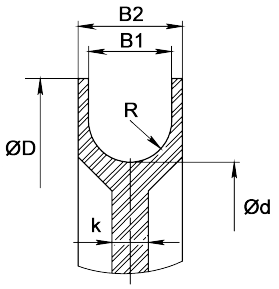

Type 1

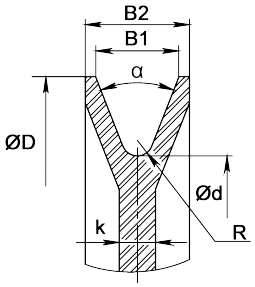

Type 2

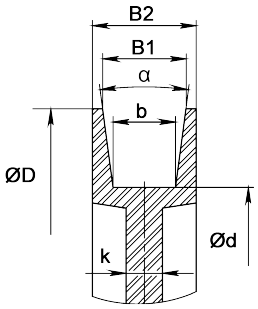

Type 3

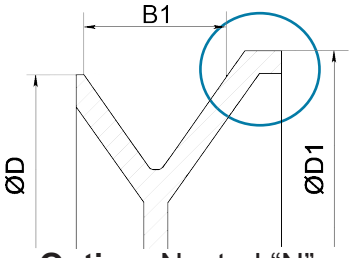

Option: Nested “N”

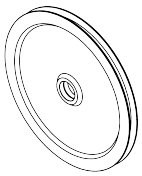

Standard “St”

Bearing Housing

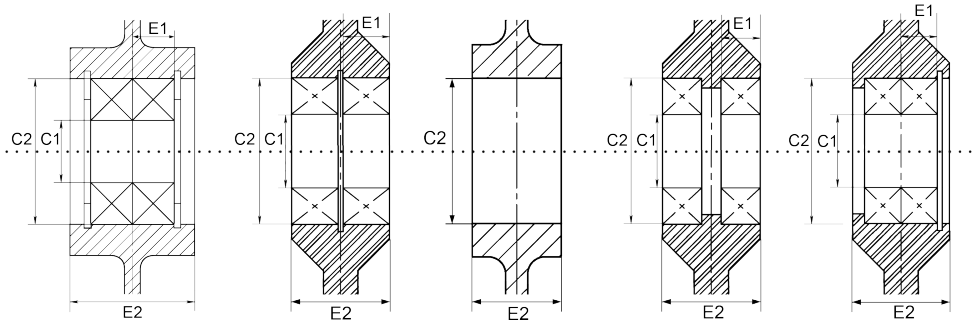

Type A | Type B | Type C | Type D | Type E

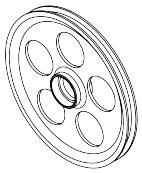

Weight reduction holes “Wh”

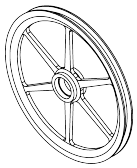

Spokes “Sp”

Article	Ød	ØD	ØD1	B1	B2	b	k	R	α	C1	C2	E1	E2	Bearing	Max Product Ø	Design
06581*	40	49	54	-	11	-	5	1	-	-	22	-	7		Ø4	2-C-N-St
07215	50	68	-	16	21	-	21	8	-		32	9,85	21	6210-2Z	Ø16	1-B-St
15396	55	70	-	-	18	6,4	2,5	-	55°	-	10	-	13,5	W627/6 R-2Z	Ø9,5	3-C-Wh
12070A*	55	70	-	14	18	-	2,5	1	82°	-	10	-	18	W627/6 R-2Z	Ø11	2-C-Wh
13972*	70	77,59	81	8,2	12,7	-	2	0,7	90°		16,8	4,95	11	619-2Z	Ø5	2-B-N-St
09918A	76	88	94	-	22	4,5	4	-	70°		28		19	6001-2Z	Ø11	3-B-N-St
04980B*	76	96	-	18	20	4	3	-	70°	12	28	8	24	6001-2Z	Ø15	3-A-St
06580*	80	91,5	102	10	20	-	4	1,5	70°	-	35	-	10	6003-2Z	Ø8	2-C-N-St
11840*	90	110	-	17	19,5	-	3	2,5	72°	15	32	9	19,5	6002-2Z	Ø14	2-B-St
6578A*	90	110	-	18	20	-	3	2,5	72°	17	35	9	20	6804-2Z	Ø14	2-B-St
10396	120	-	-	-	-	4		-	-	-	-	-	22	6203-2Z	Ø5	3-B-St
07924A	123	143	-	11	17,5	-	3	3	40°	12	28	8	17,5	6001-2Z	Ø6	2-B-St
13958*	125,7	140,5	147	-	24,63	-	3,5	1	90°	-	35	-	21,5		Ø15	2-C-N-St
13515*	158	176	-	12,7	22	-	6	2	60°	17	35	22	10	6003-2Z	Ø10	2-B-St
05959*	160	175	-	26	32	22	5	-	30°	-	55	-	36	6006-2Z	Ø22	3-D-St
10511A*	170	200	-	-	26	-	4	3	45°	25	47	12	26	6005-2Z	Ø19	2-B-St
16747	170	200	-	14	18	-	4	6	12°	25	47	12	26	6005-2Z	Ø12	2-B-St
08269*	170	210	-	21	26	-	8	3	45°	25	47	12	26	6005-2Z	Ø19	2-B-St
05070A*	200	240	-	21	26	-	8	3	45°	25	47	12	26	6005-2Z	Ø19	2-B-St

* Stock item

Subec AB **Hesselmans Torg 5** **SE- 131 54 Nacka** **Sweden** **Phone: +46-8-88 46 33** **Email: info@subec.se** **Web: www.subec.se**

Copyright © 2026 Subec

ALU. SHEAVES WITH CERAMIC COATED GROOVES

Groove Geometries

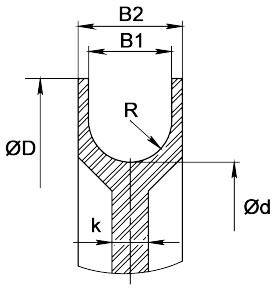

Type 1

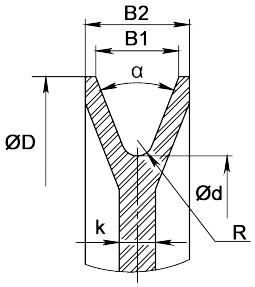

Type 2

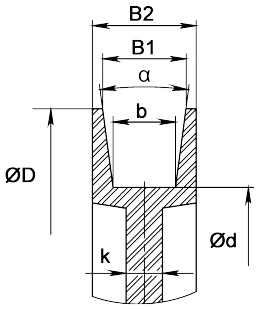

Type 3

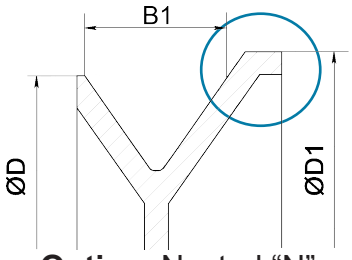

Option: Nested “N”

Standard “St”

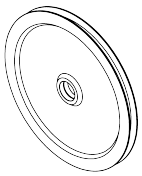

Bearing Housing

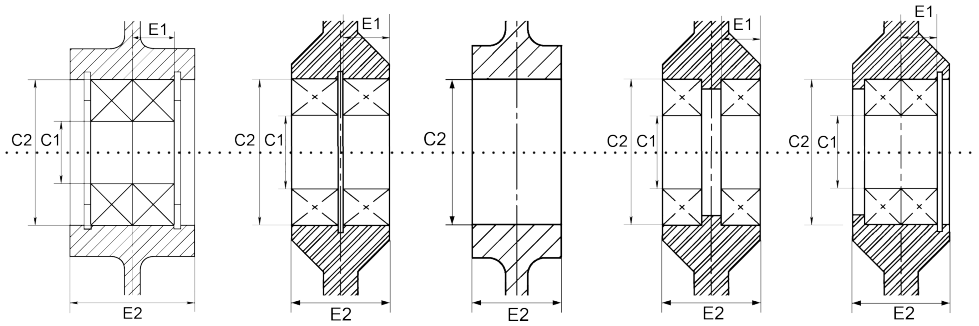

Type A | Type B | Type C | Type D | Type E

Weight reduction holes “Wh”

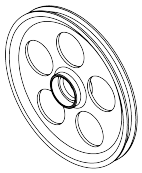

Spokes “Sp”

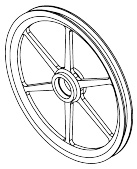

Article	Ød	ØD	ØD1	B1	B2	b	k	R	α	C1	C2	E1	E2	Bearing	Max Product Ø	Design
14107	250	265	-	8	12	-	3	1	48°	20	42	8	18	16004-2Z	Ø8	2-D-St
06557*	250	265	-	11	12	8	4	-	20°	20	42	8	18	16004-2Z	Ø11	3-D-St
06558*	250	270	-		16	10	4	-	20°		42		16		Ø8	3-B-St
15324*	270	296	304		20,5	-	5	4,5	15°	15	28	7	15,3	61902-2Z	Ø9	2-B-N-Wh
13921*	300	340	-	18	20	-	7	3	40°	25	47	9,08	20	6005-2Z	Ø20	2-B-Wh
09256*	300	350	-	18	25,85	-	5	2	40°	20	42	12	25,85	6004-2Z	Ø20	2-B-Wh
11070*	300	350	-	24	25,85	-	5	5,5	35°	20	42	12	25,85	6004-2Z	Ø23	2-B-Wh
06683	300	400	-	54	70	45	6	-	10°	40	68	33,68	70	6008-2Z	Ø49	3-B-St
05798	310	370	-	30	40	-	15	15	-	55	80	28,68	60	61911-2Z	Ø30	1-B-St
05810*	320	380	-	34,6	50	-	16	1,5	60°	35	80	23,68	50	6307-2Z	Ø34	2-B-St
09677*	700	730	-	42	48	40	10	-	10°	75	115	20	44	6015-2Z	Ø38	3-B-Sp

* Stock item

Subec AB **Hesselmans Torg 5** **SE- 131 54 Nacka** **Sweden** **Phone: +46-8-88 46 33** **Email: info@subec.se** **Web: www.subec.se**

Copyright © 2026 Subec

SHEAVE Ø30MM

Material: Aluminium

Ceramic coated Groove

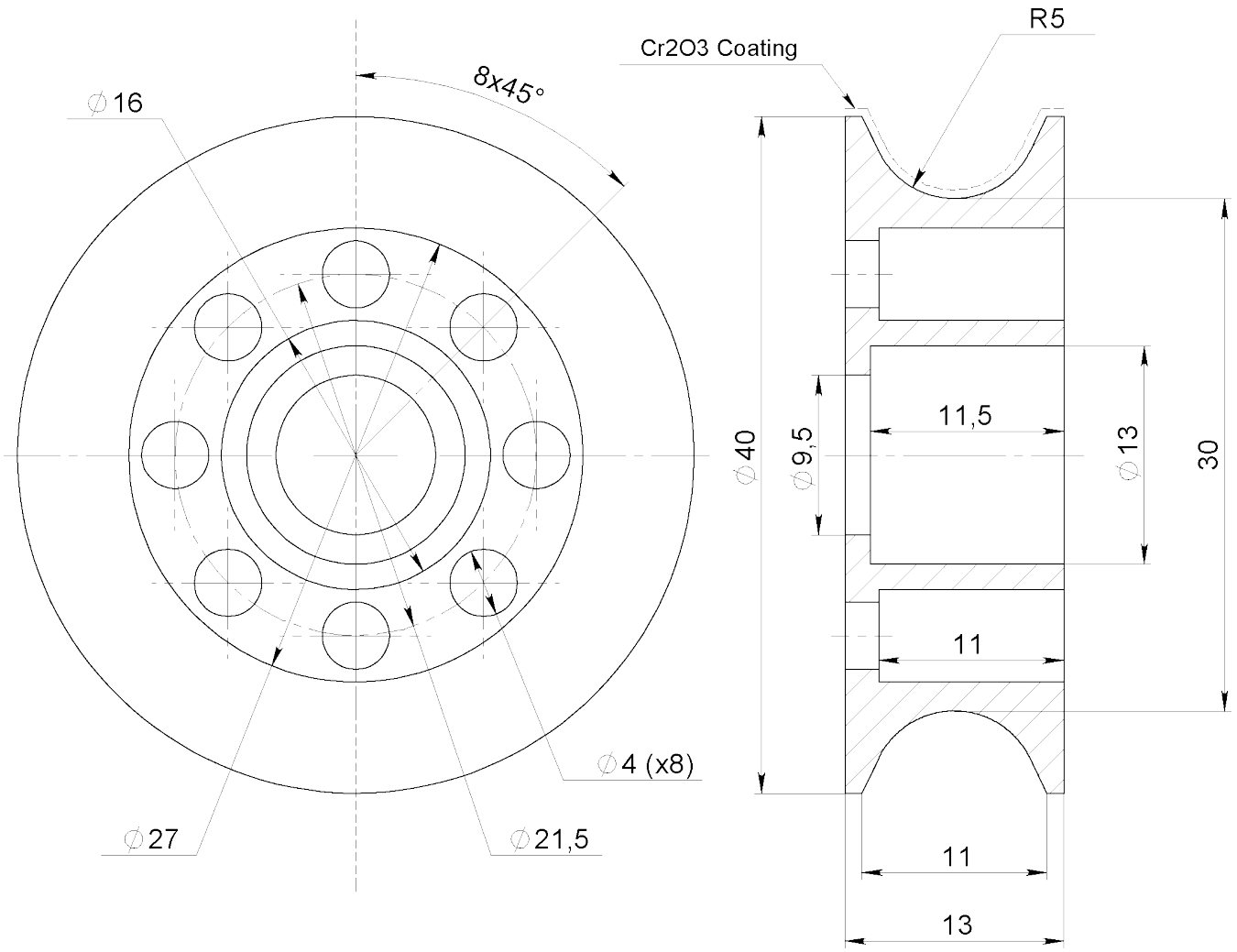

Article: 9378

Drawing No. 1-400764-02

Subec AB **Hesselmans Torg 5** **SE- 131 54 Nacka** **Sweden** **Phone: +46-8-88 46 33** **Email: info@subec.se** **Web: www.subec.se**

Copyright © 2026 Subec

SLEEVE ROLLERS

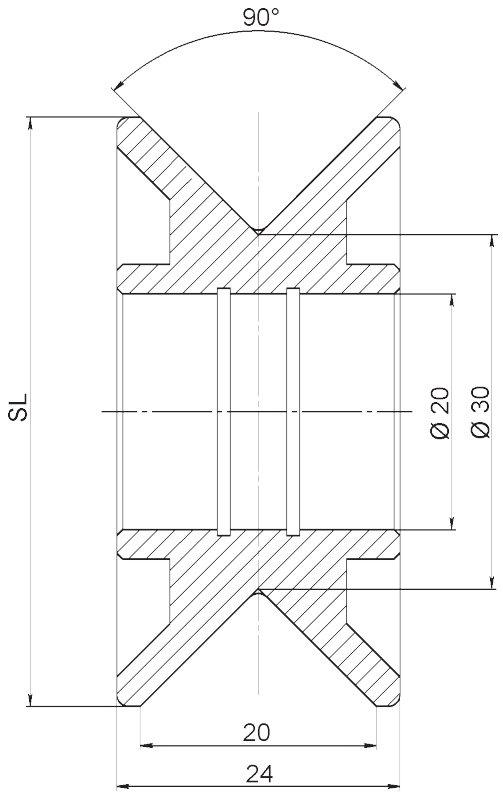

V-Groove				
Article	**SL**	**Material**	**Coating**	**Bearing**
13184	50	Tungsten Carbide	-	619/9-2Z
13229	50	ALU	Tungsten Carbide	619/9-2Z
12906A*	50	ALU	Cr_2O_3	619/9-2Z



Article: 12906A*

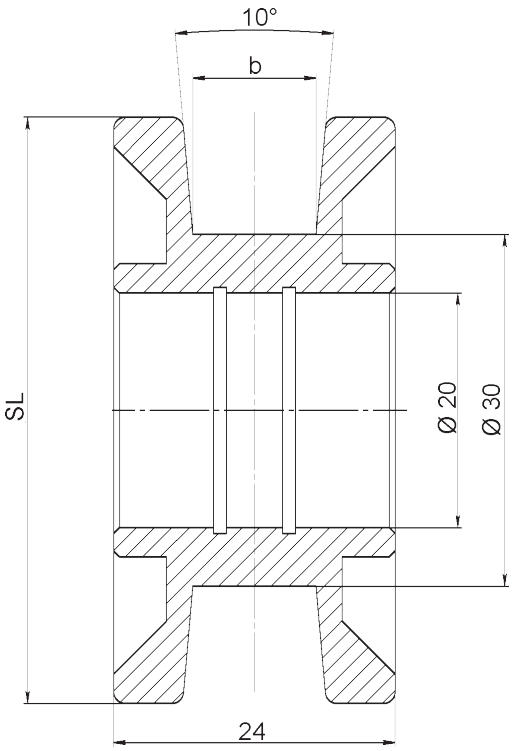

Flat-Groove					
Article	**SL**	**b**	**Material**	**Coating**	**Bearing**
13185	50	10,5	Tungsten Carbide	-	619/9-2Z
13230	50	10,5	ALU	Tungsten Carbide	619/9-2Z
13253	50	15,8	ALU	Cr_2O_3	619/9-2Z

Drawing No. 3-400764-02

Subec AB **Hesselmans Torg 5** **SE- 131 54 Nacka** **Sweden** **Phone: +46-8-88 46 33** **Email: info@subec.se** **Web: www.subec.se**

Copyright © 2026 Subec

SHEAVE Ø37MM

Material: Aluminium

Ceramic coated Groove

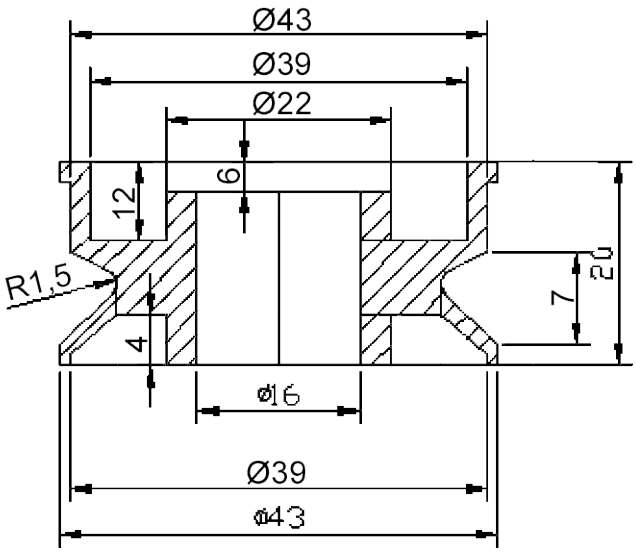



Article: 06582*
Weight: 0,033kg

* Stock item

Subec AB **Hesselmans Torg 5** **SE- 131 54 Nacka** **Sweden** **Phone: +46-8-88 46 33** **Email: info@subec.se** **Web: www.subec.se**

Copyright © 2026 Subec

SHEAVE Ø60MM

Material: Aluminium

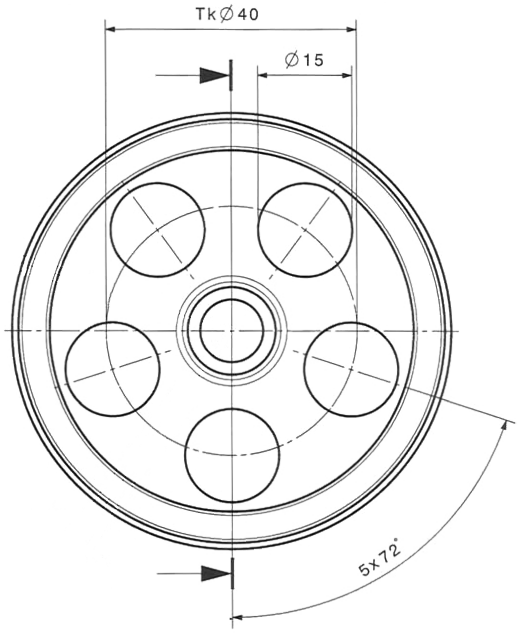

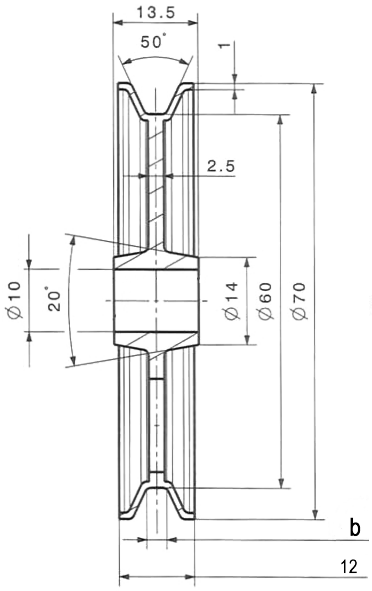

Flat Groove

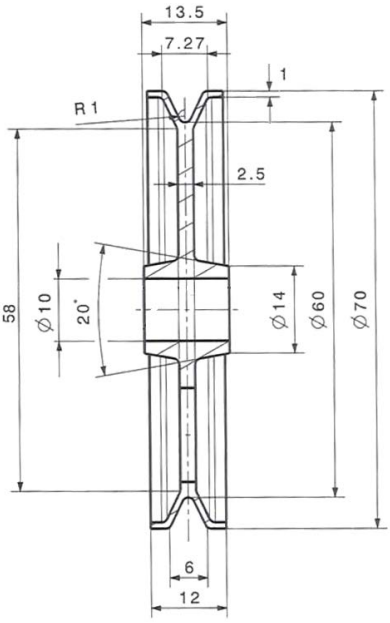

V-Groove

Bearing: SMF106

Article	b	Product range	Groove
11111	3,2	Ø5-8	Flat Groove, ceramic coat
11146*	3,2	Ø5-8	Flat Groove
11112	3,8	Ø5-8	Flat Groove, ceramic coat
11113	4,7	Ø5-8	Flat Groove, ceramic coat
11114	-	Ø1-6	V-Groove, ceramic coat
11148*	-	Ø1-6	V-Groove

Drawing No. 3-401275-00

* Stock item

Subec AB **Hesselmans Torg 5** **SE- 131 54 Nacka** **Sweden** **Phone: +46-8-88 46 33** **Email: info@subec.se** **Web: www.subec.se**

Copyright © 2026 Subec

SHEAVE Ø65, 80, 85 MM

Material: Aluminium

Ceramic coated Groove

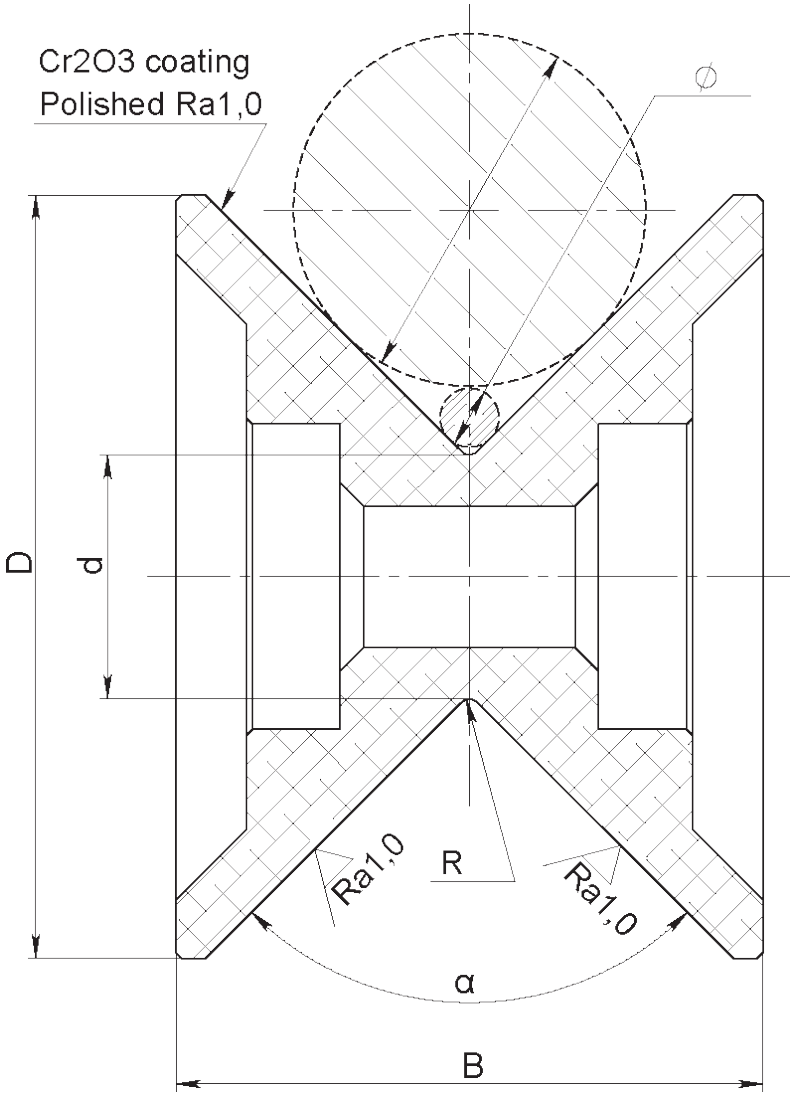



Article: 11015A*

Article	D	B	d	R	α	Bearing	Product range	Weight
11397	41	30	23,5	8	100	696-2Z	5-25mm	0,09kg
11015A*	65	50	20	1	90	6000-2Z	2-40mm	0,13kg
11585*	80	60	35	1,5	86	6202-2Z	5-50mm	
12640*	85	65	32	2	90	6002-2Z	5-60mm	0,27kg

Drawing No. 3-401270-00

* Stock item

Subec AB **Hesselmans Torg 5** **SE- 131 54 Nacka** **Sweden** **Phone: +46-8-88 46 33** **Email: info@subec.se** **Web: www.subec.se**

Copyright © 2026 Subec

CERAMIC SHEAVE Ø63-178MM

Ceramic ring with Aluminum flange

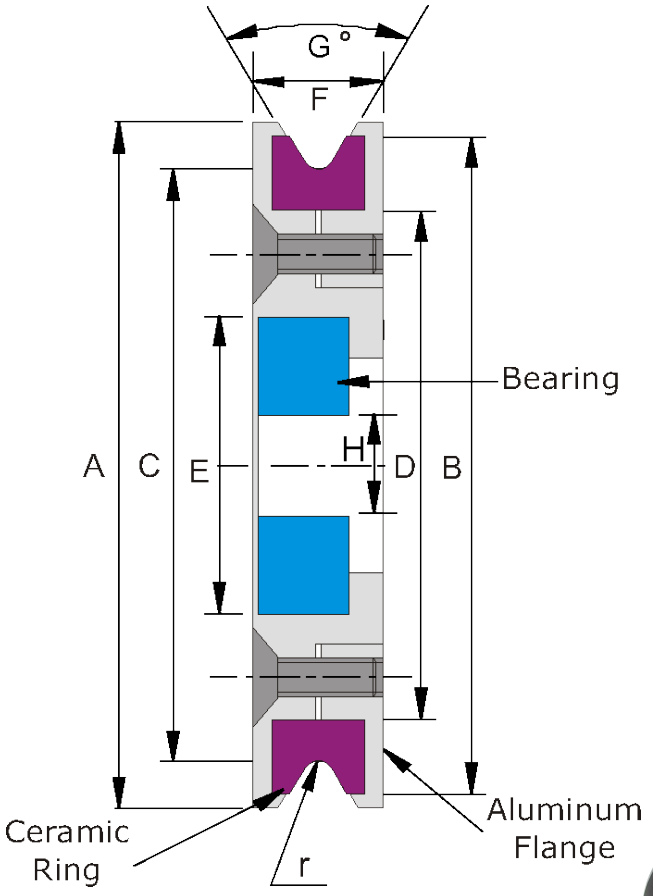

Material: Ceramic Al2O3 95%
Aluminum flanges, anodized
Stainless screws and bearings,
Dynamically balanced to 2500rpm



Article	A	B	C	D	E	F	G	H	r	Weight
06822*	69	66,3	56 (2,2”)		30	16,5	60°	10	0,8	0,17kg
06809*	76,2	70	63,5 (2,5”)	55	30	12,7	60°	10	1,6	0,15kg
06810*	88,9	83	76,2 (3”)	68	32	12,7	60°	12	1,6	
06811*	123,8	111	101,6 (4”)	91	35	14,3	45°	15	1,6	0,42kg
06812*	152,4	138	127 (5”)	116	40	15,6	45°	17	1,6	0,70kg
06949*	191	175	159,2 (6,27”)	150	35	18,8	25°	15	3	
06813*	203,2	190	177,8 (7”)	166	52	19,1	60°	20	1,6	1,5kg

Drawing No. 3-400575-00

* Stock item

Subec AB **Hesselmans Torg 5** **SE- 131 54 Nacka** **Sweden** **Phone: +46-8-88 46 33** **Email: info@subec.se** **Web: www.subec.se**

Copyright © 2026 Subec

SHEAVE Ø80MM

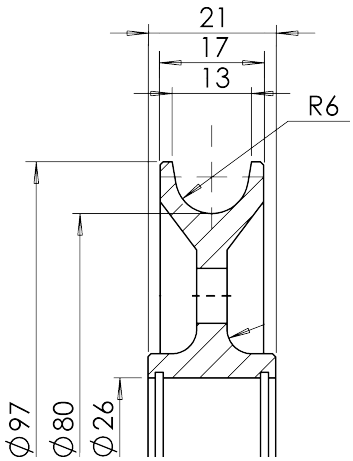

Article: 3723
Material: Steel, 50-55HRC



Article: 03723

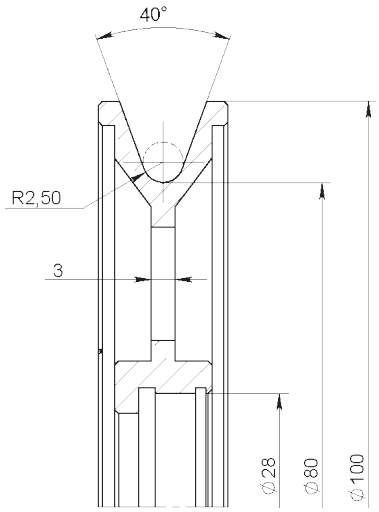

Article: 8978
Material: Aluminium

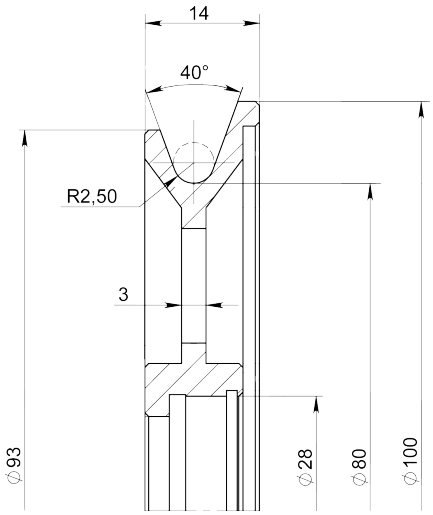

Article: 8979
Material: Aluminium

Article: 9008
Material: Hard Anodized

Article: 9009
Material: Aluminium + Cr2O3 Coated Groove

Subec AB **Hesselmans Torg 5** **SE- 131 54 Nacka** **Sweden** **Phone: +46-8-88 46 33** **Email: info@subec.se** **Web: www.subec.se**

Copyright © 2026 Subec

SHEAVE Ø85MM

Product range: 1-8mm

Material: Aluminium

Ceramic coated Groove

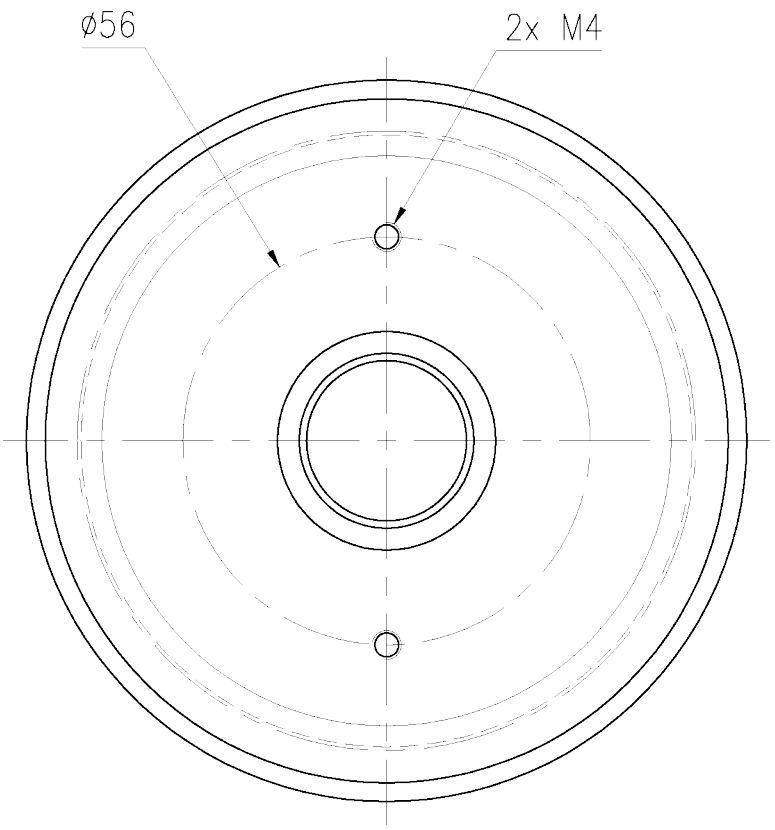

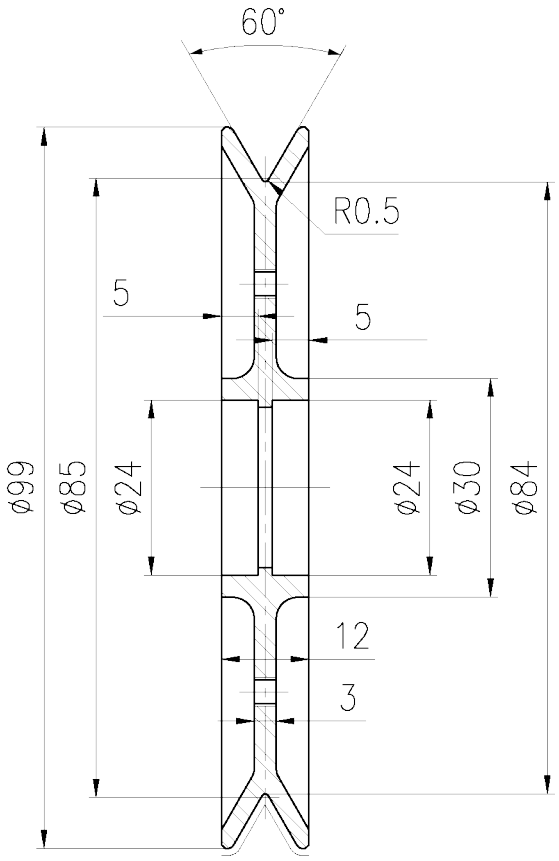



Article: 10921*
Weight: 0,08kg

Drawing No. 3-400290-00

Subec AB **Hesselmans Torg 5** **SE- 131 54 Nacka** **Sweden** **Phone: +46-8-88 46 33** **Email: info@subec.se** **Web: www.subec.se**

Copyright © 2026 Subec

SHEAVE Ø100MM

Material: Aluminium

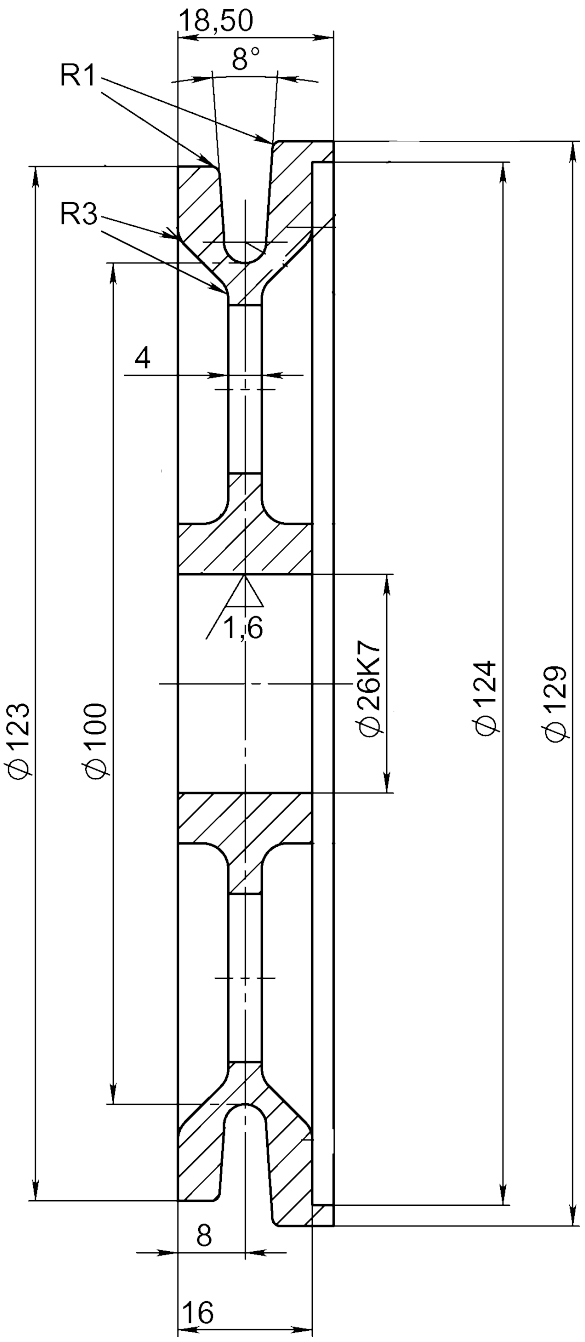

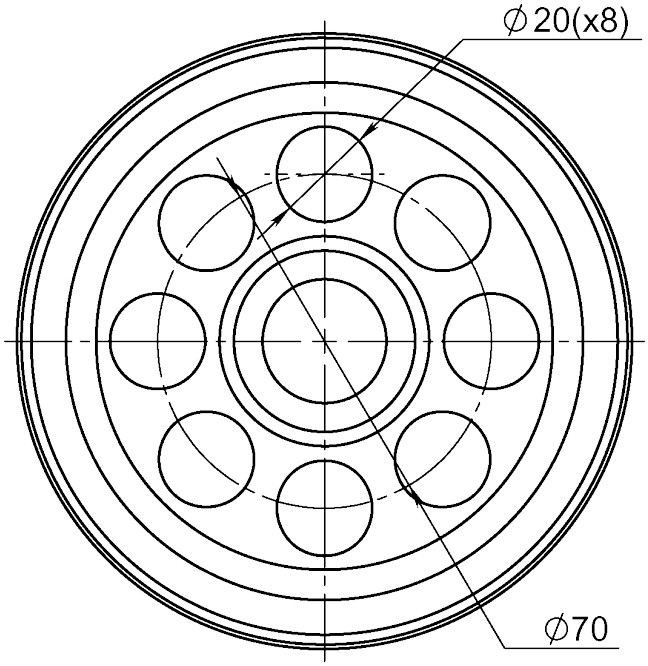



Article: 06666



Drawing No. 1-400427-00

Subec AB **Hesselmans Torg 5** **SE- 131 54 Nacka** **Sweden** **Phone: +46-8-88 46 33** **Email: info@subec.se** **Web: www.subec.se**

Copyright © 2026 Subec

SHEAVE Ø123MM

Material: Aluminium
Ceramic coated groove, electrically-insulated



Article: 10744*

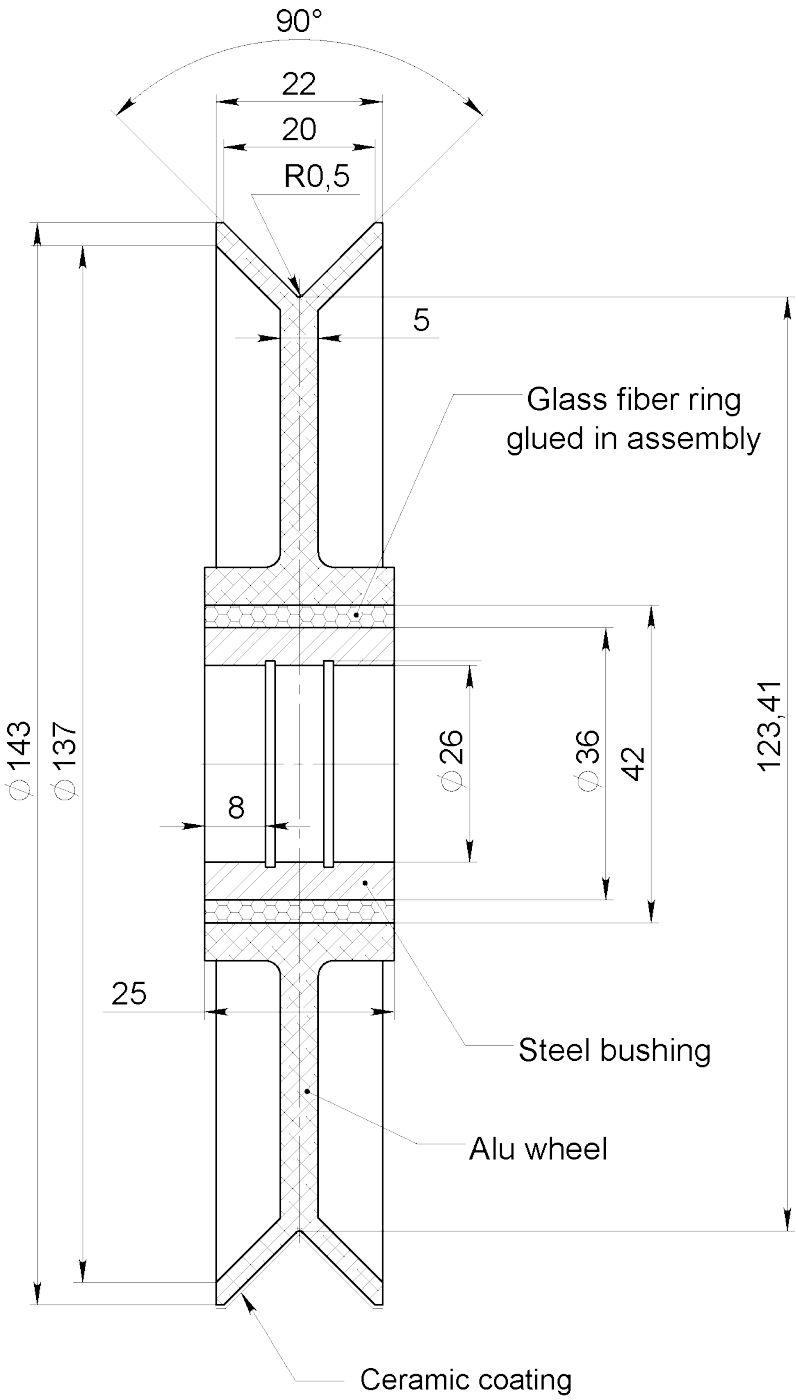

Dynamic balanced to 4700rpm

Drawing No. 3-400290-00

* Stock item

Subec AB **Hesselmans Torg 5** **SE- 131 54 Nacka** **Sweden** **Phone: +46-8-88 46 33** **Email: info@subec.se** **Web: www.subec.se**

Copyright © 2026 Subec

SHEAVE Ø127MM

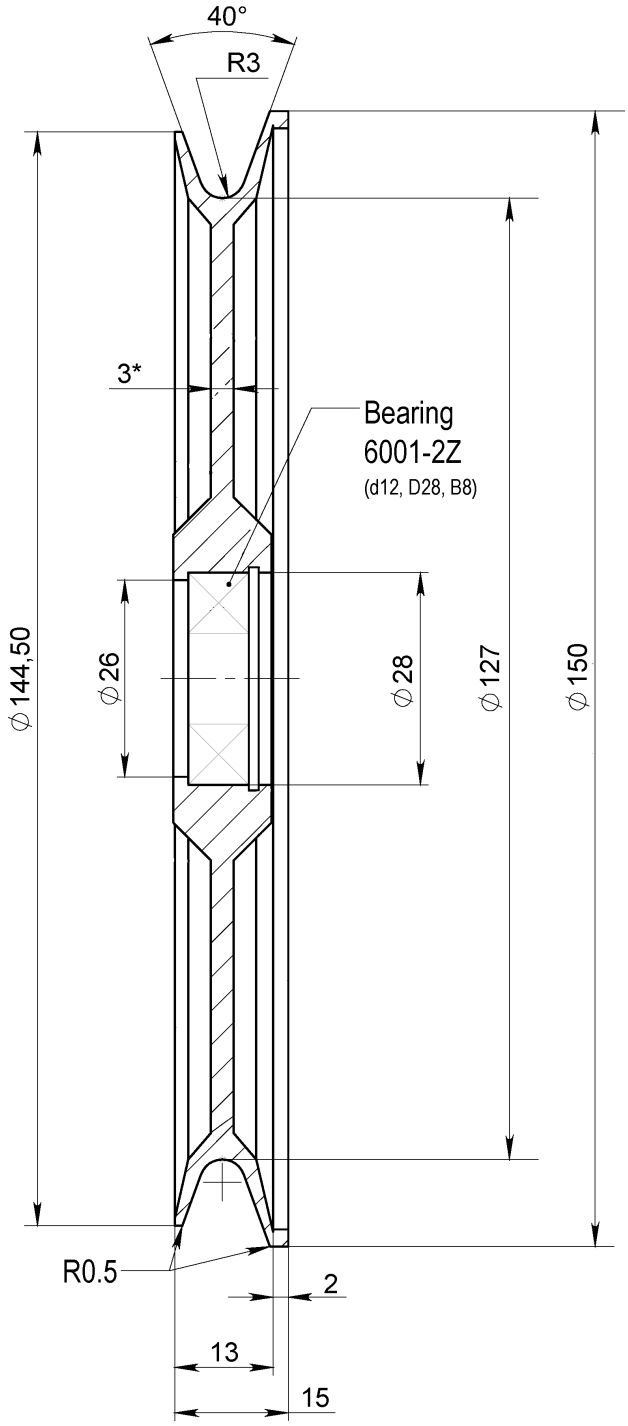

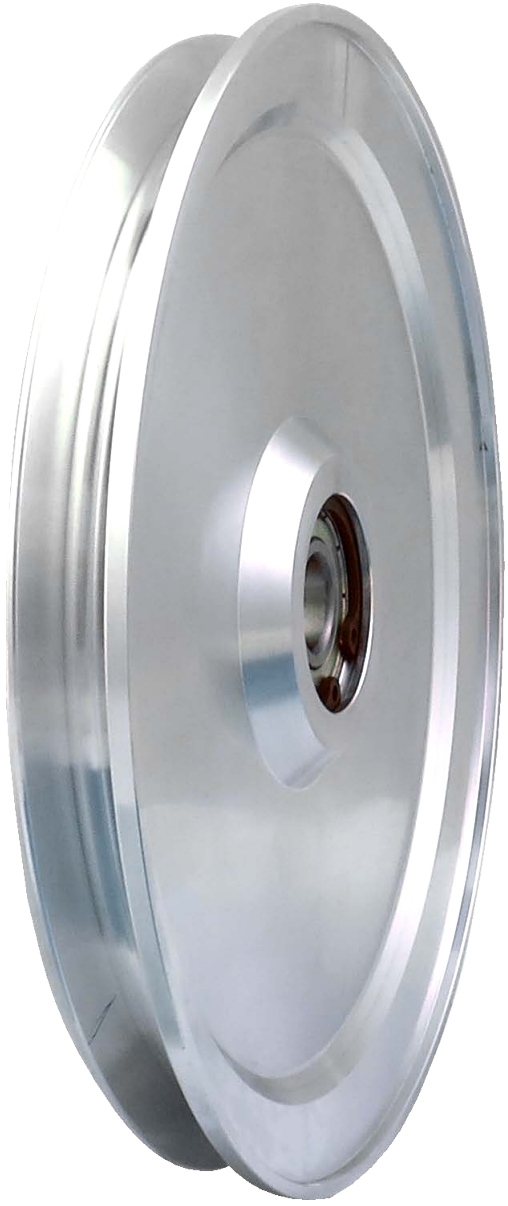

Article: 11181*
Bearing: 6001-2Z

Drawing No. 3-401136-00

* Stock item

Subec AB **Hesselmans Torg 5** **SE- 131 54 Nacka** **Sweden** **Phone: +46-8-88 46 33** **Email: info@subec.se** **Web: www.subec.se**

Copyright © 2026 Subec

SHEAVE Ø135MM

Material: Aluminium

Alternative: Ceramic coated Groove

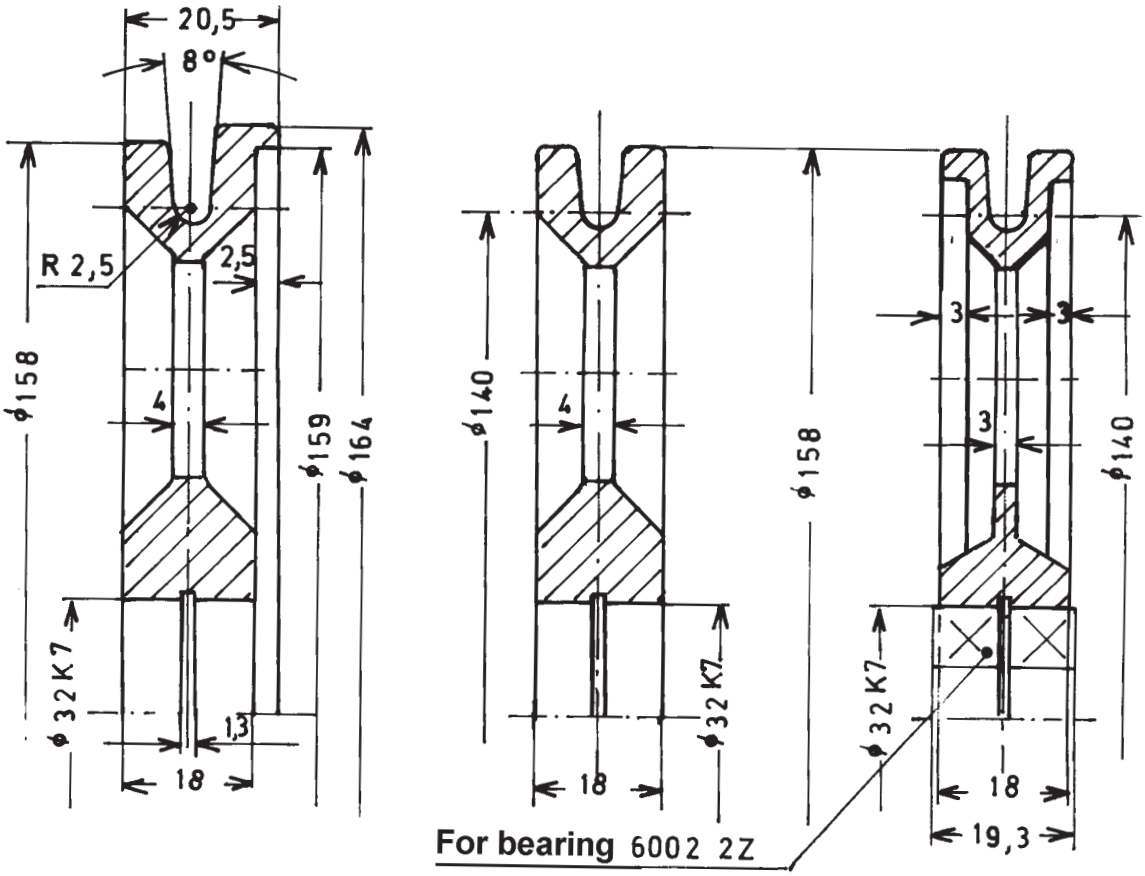

Article	Single overlap	No overlap	Double overlap
Standard	**05729**	**00947**	**04977**
Ceramic Coated	**07025**	**07026**	**07027**



Drawing No. 1-400427-00

Subec AB **Hesselmans Torg 5** **SE- 131 54 Nacka** **Sweden** **Phone: +46-8-88 46 33** **Email: info@subec.se** **Web: www.subec.se**

Copyright © 2026 Subec

SHEAVE Ø135, 260, 560MM

Material: Steel

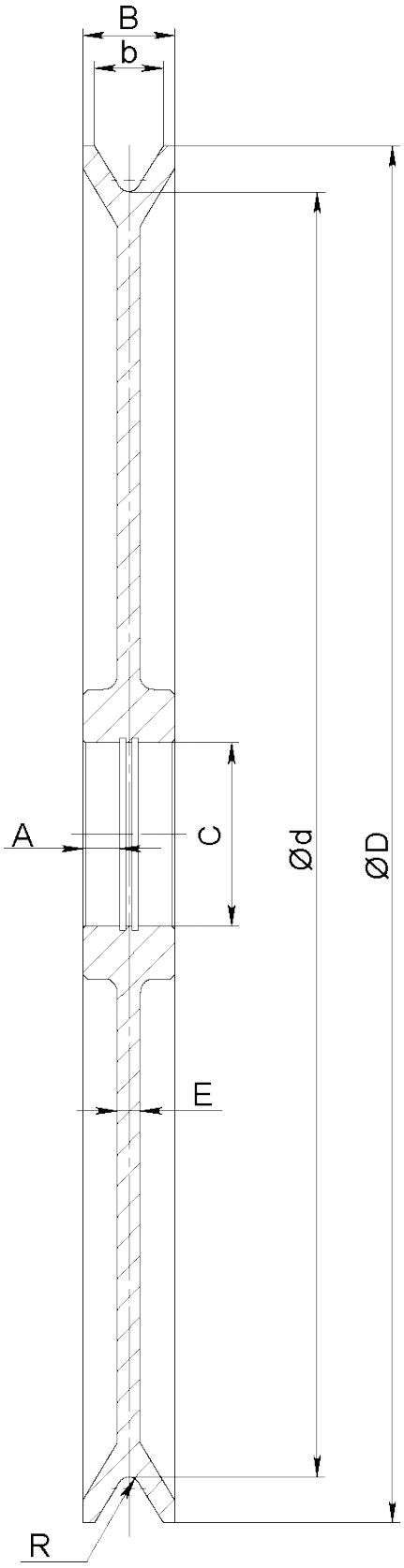



Article	Ød	ØD	b	B	A	C	E	R
08996	135	155	14,5	25		75	25	3,75
08995	260	300	27	38	17,5	75	10	5
08994	560	600	30	40	16	80	10	5

Drawing No. 3-400290-00

Subec AB **Hesselmans Torg 5** **SE- 131 54 Nacka** **Sweden** **Phone: +46-8-88 46 33** **Email: info@subec.se** **Web: www.subec.se**

Copyright © 2026 Subec

SHEAVE Ø160MM

Material: Aluminium

With Zirconium Ring

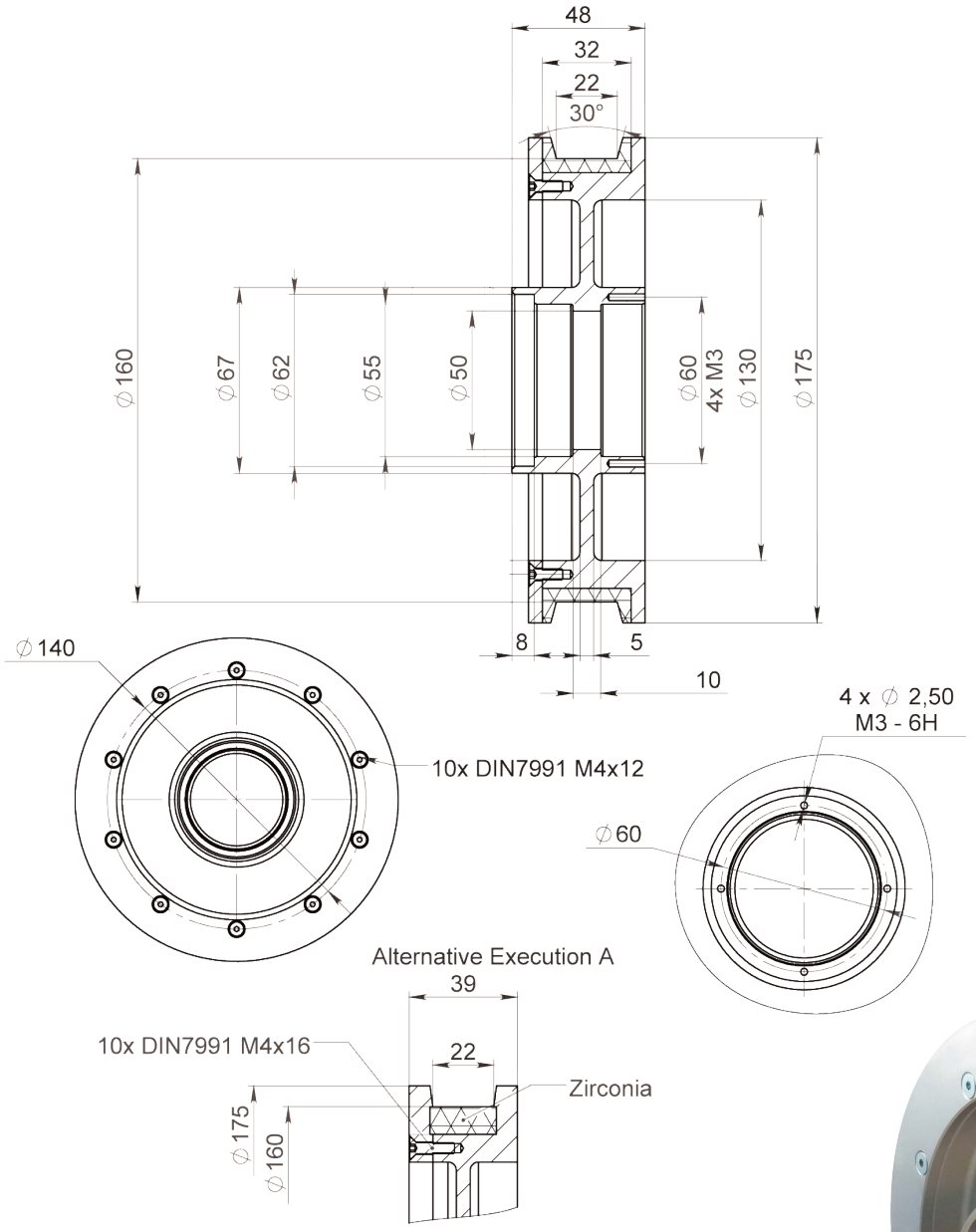



Article: 10620A*

Weight: 1,6kg

Drawing No. 3-401254-00

* Stock item

Subec AB **Hesselmans Torg 5** **SE- 131 54 Nacka** **Sweden** **Phone: +46-8-88 46 33** **Email: info@subec.se** **Web: www.subec.se**

Copyright © 2026 Subec

SHEAVE Ø169MM

Material: Aluminium

Available with various grooves

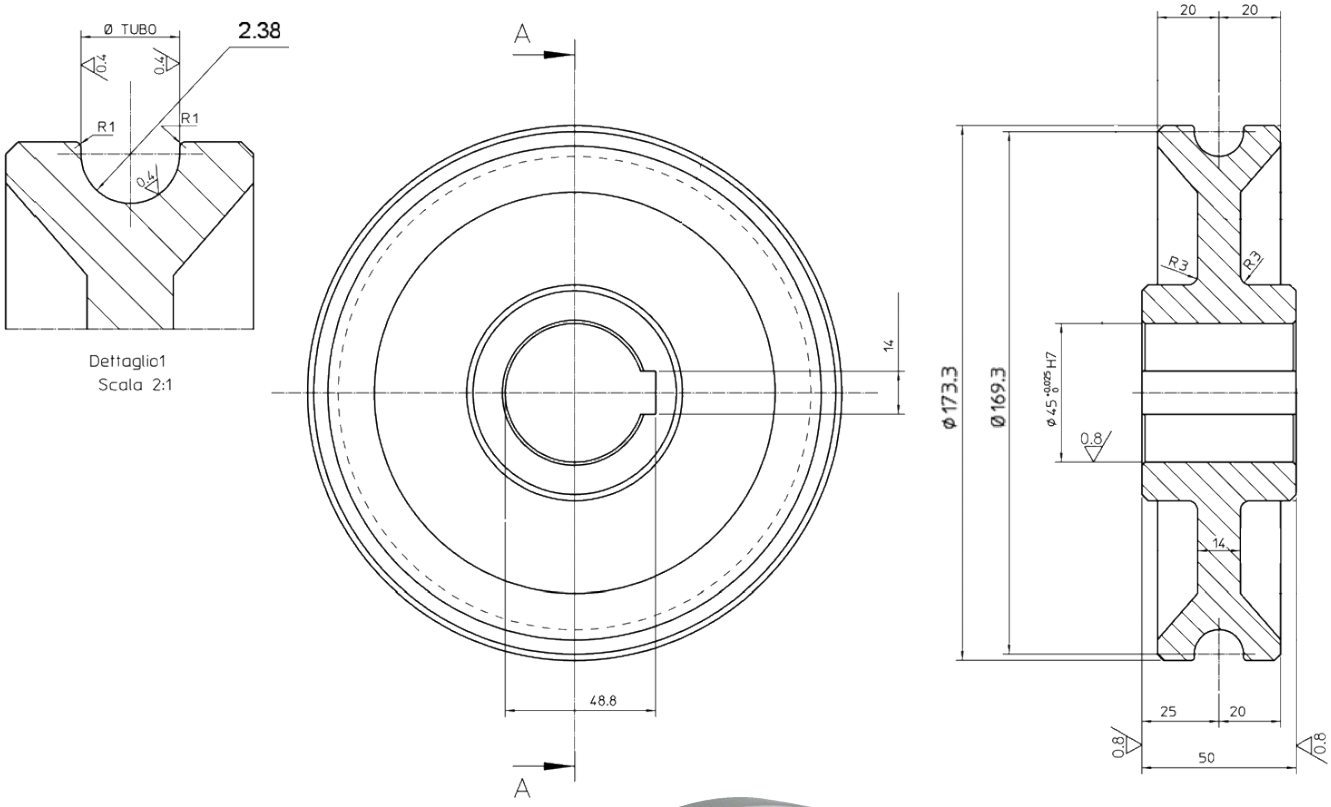



Article: 07669
Weight: 3,6kg

Drawing No. 3-400938-00

Subec AB **Hesselmans Torg 5** **SE- 131 54 Nacka** **Sweden** **Phone: +46-8-88 46 33** **Email: info@subec.se** **Web: www.subec.se**

Copyright © 2026 Subec

SHEAVE Ø200MM

Material: Stainless Steel + POM

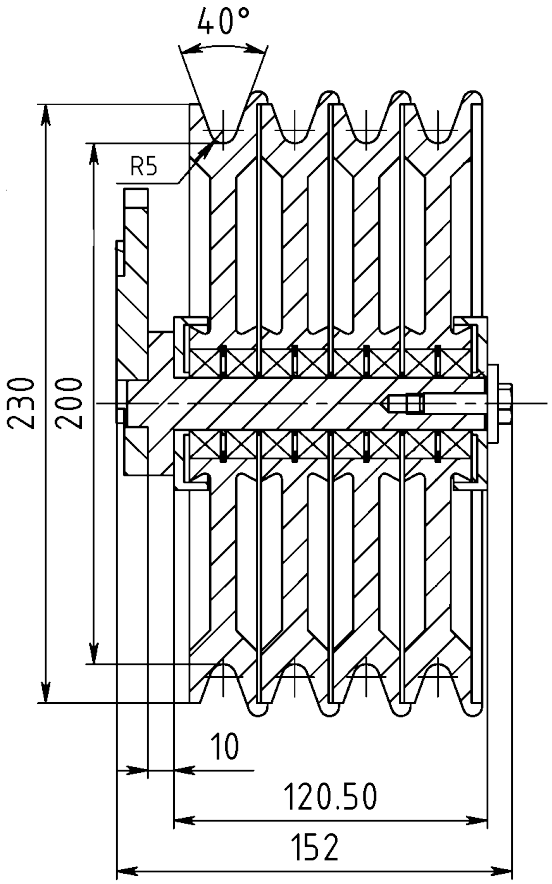

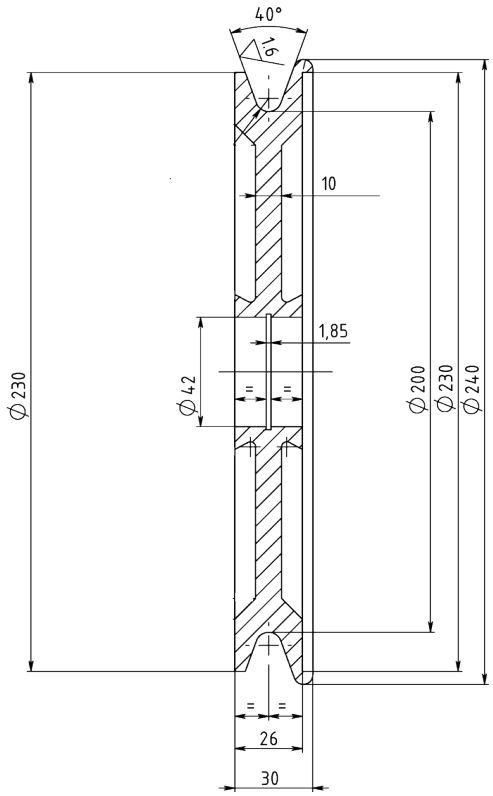

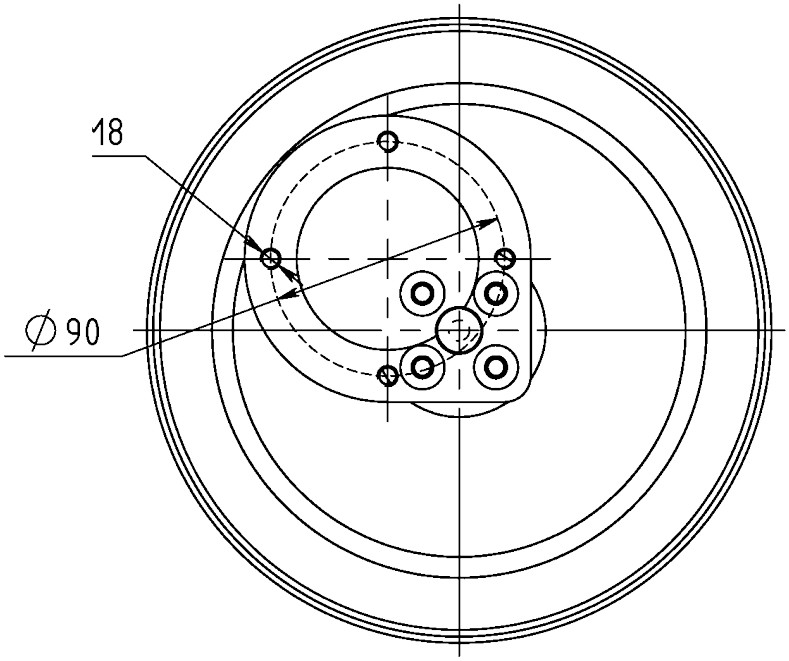

Assembly for water trough



Article: 02080
Weight: 0,8kg

Drawing No. 3-400507-00

Subec AB **Hesselmans Torg 5** **SE- 131 54 Nacka** **Sweden** **Phone: +46-8-88 46 33** **Email: info@subec.se** **Web: www.subec.se**

Copyright © 2026 Subec

SHEAVE Ø220MM

Material: Aircraft Aluminum AW7075-T6

Type A
Article: 04946A

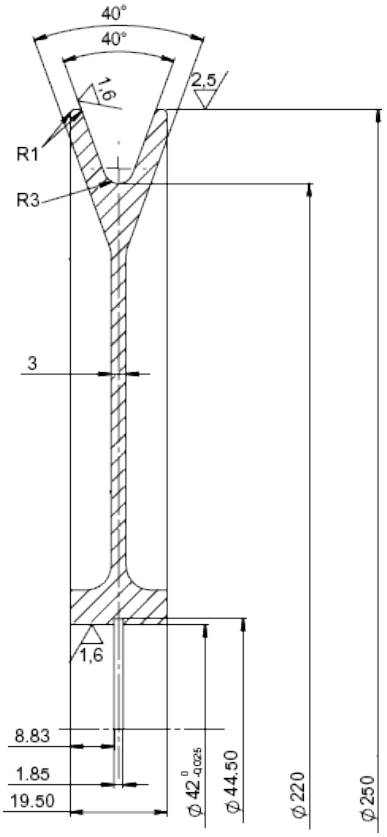

Type B
Nested
Article: 04947

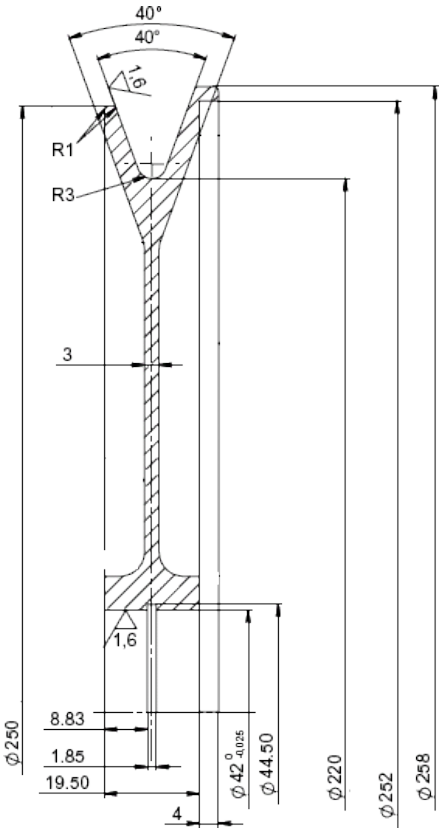

Type C
Weight reduction holes
Article: 13408

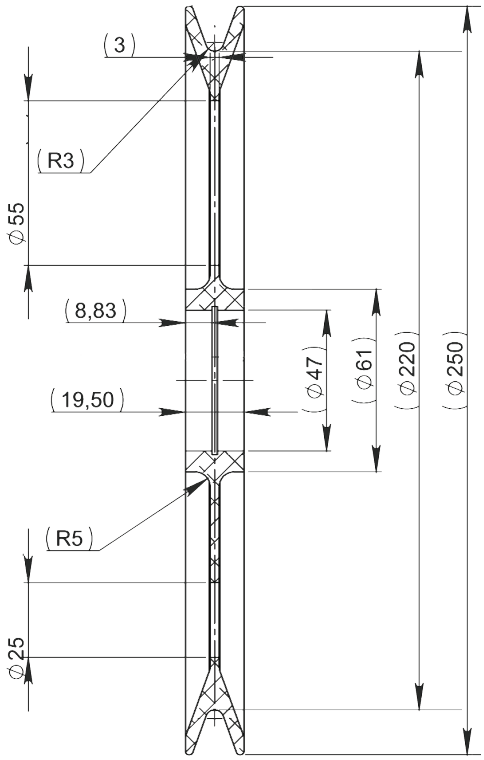



Option: With Teflon coated groove
Article: 05640
Weight: 0,9kg

Drawing No. 3-400290-02

Subec AB **Hesselmans Torg 5** **SE- 131 54 Nacka** **Sweden** **Phone: +46-8-88 46 33** **Email: info@subec.se** **Web: www.subec.se**

Copyright © 2026 Subec

SHEAVE Ø240MM

Material: Aluminium

Groove: Polyurethane, Shore A 70

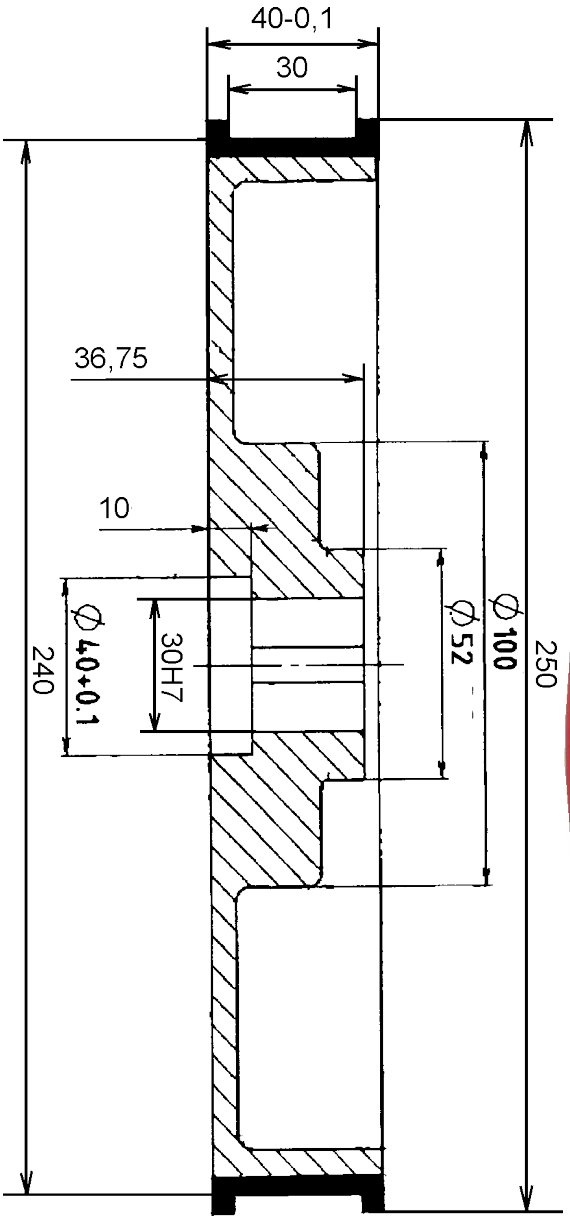



Article: 05818

Drawing No. 3-400512-00

Subec AB **Hesselmans Torg 5** **SE- 131 54 Nacka** **Sweden** **Phone: +46-8-88 46 33** **Email: info@subec.se** **Web: www.subec.se**

Copyright © 2026 Subec

BRAKE SHEAVE Ø250, 400MM

Material: Steel

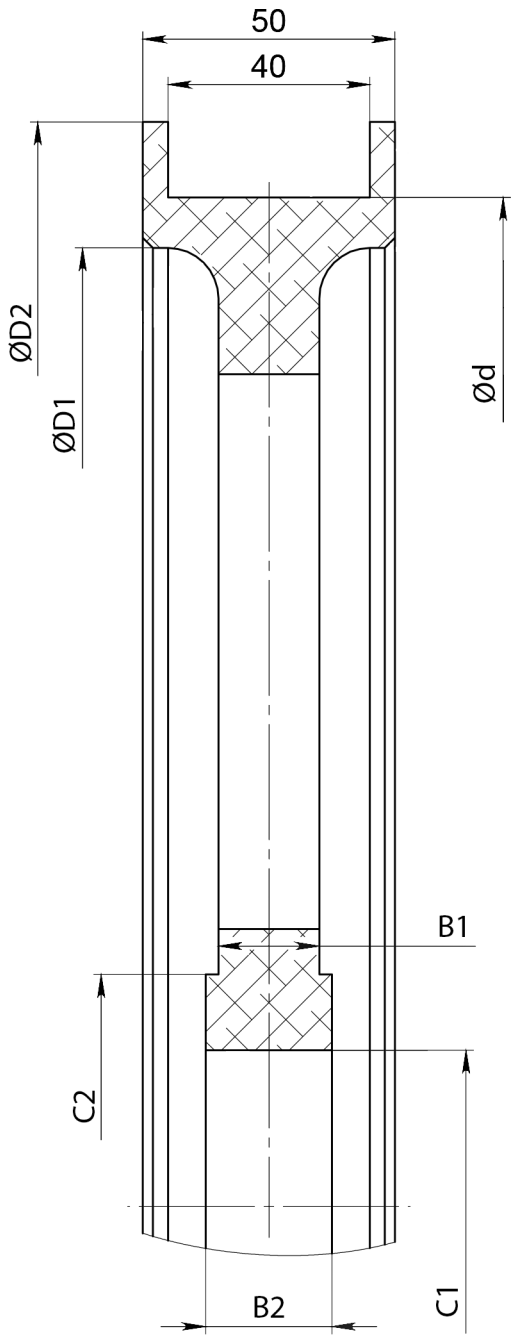

Example of application
Article: 15056

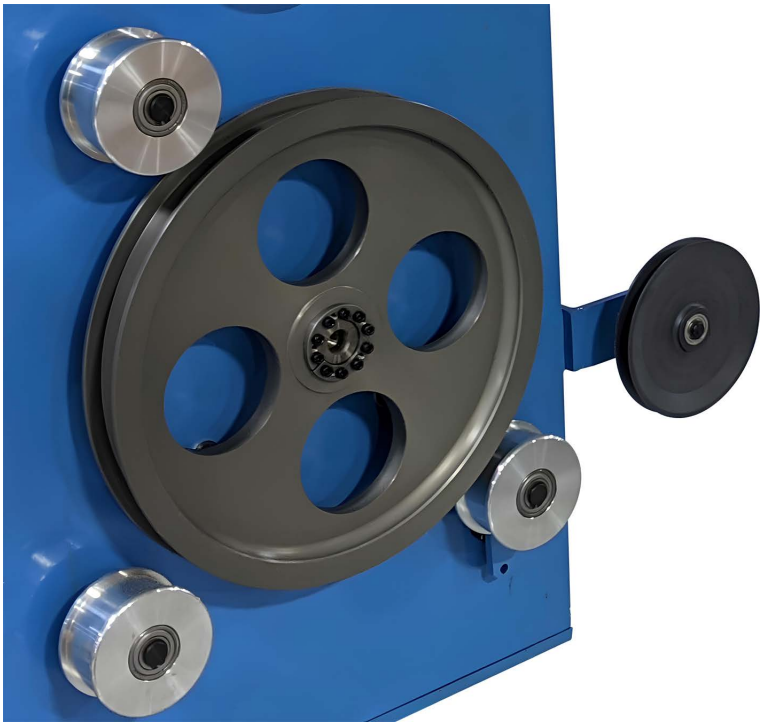

Article	Ød	ØD1	ØD2	B1	B2	C1	C2	Weight
09429	250	240	270	7	56	25	52	4,5kg
15056	400	380	430	20	25	62	92	8,7kg

Drawing No. 3-400645-00

Subec AB **Hesselmans Torg 5** **SE- 131 54 Nacka** **Sweden** **Phone: +46-8-88 46 33** **Email: info@subec.se** **Web: www.subec.se**

Copyright © 2026 Subec

LENGTH MEASURING WHEEL

Material: Aluminium

Polyurethane coated, Shore A 83

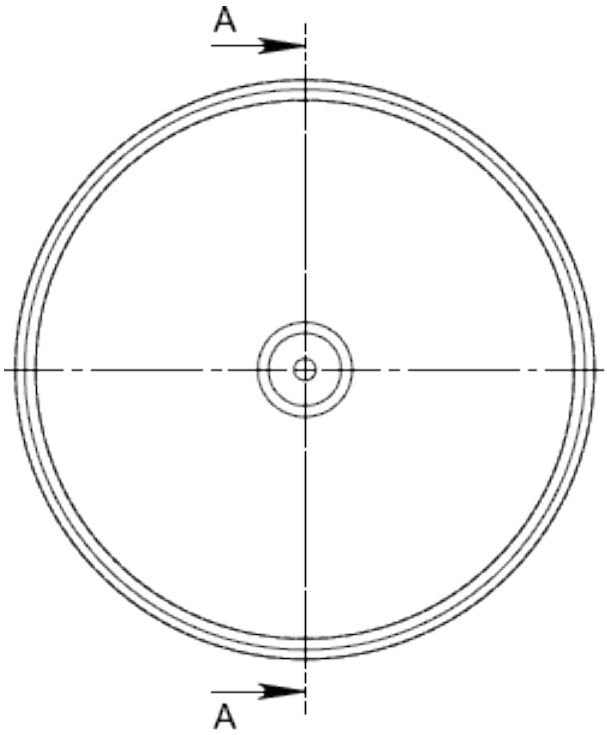

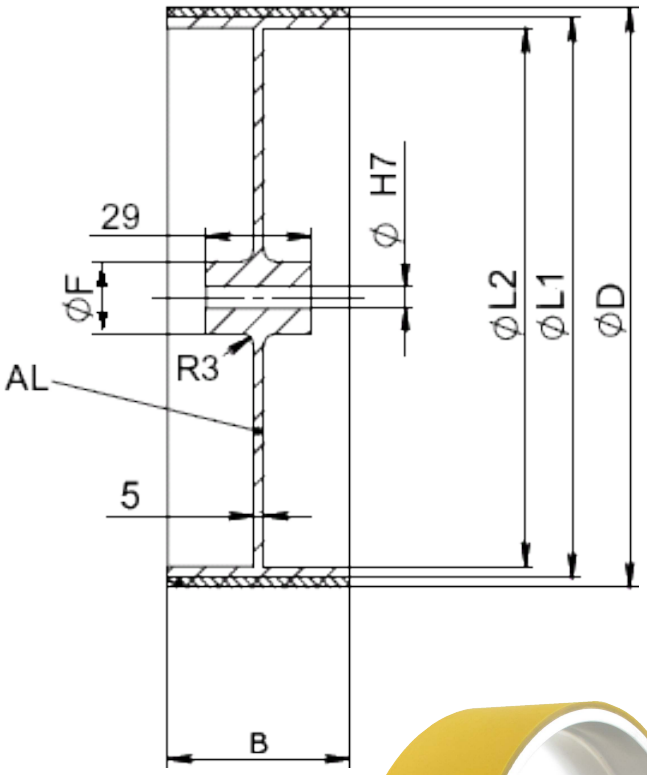



Article	ØdH7	B	Circumferance	L1	L2	ØF	D ≈	Weight
05267	6	50	500	154	148	50	159,15	
05486	7	25	500	154	148	20	159,15	
05487	10	25	500	154	148	20	159,15	
05525*	10	50	500	154	148	50	159,15	
05488	12	50	500	154	148	20	159,15	0,8kg
06829	12	100	500	154	148	20	159,15	
06354	17	58	500	154	148	20	159,15	
06001	15	40	1000	308	288	40	318,3	
04589	25	50	500	154	148	50	159,15	

Drawing No. 3-400775-00

* Stock item

Subec AB **Hesselmans Torg 5** **SE- 131 54 Nacka** **Sweden** **Phone: +46-8-88 46 33** **Email: info@subec.se** **Web: www.subec.se**

Copyright © 2026 Subec

SHEAVE Ø300MM



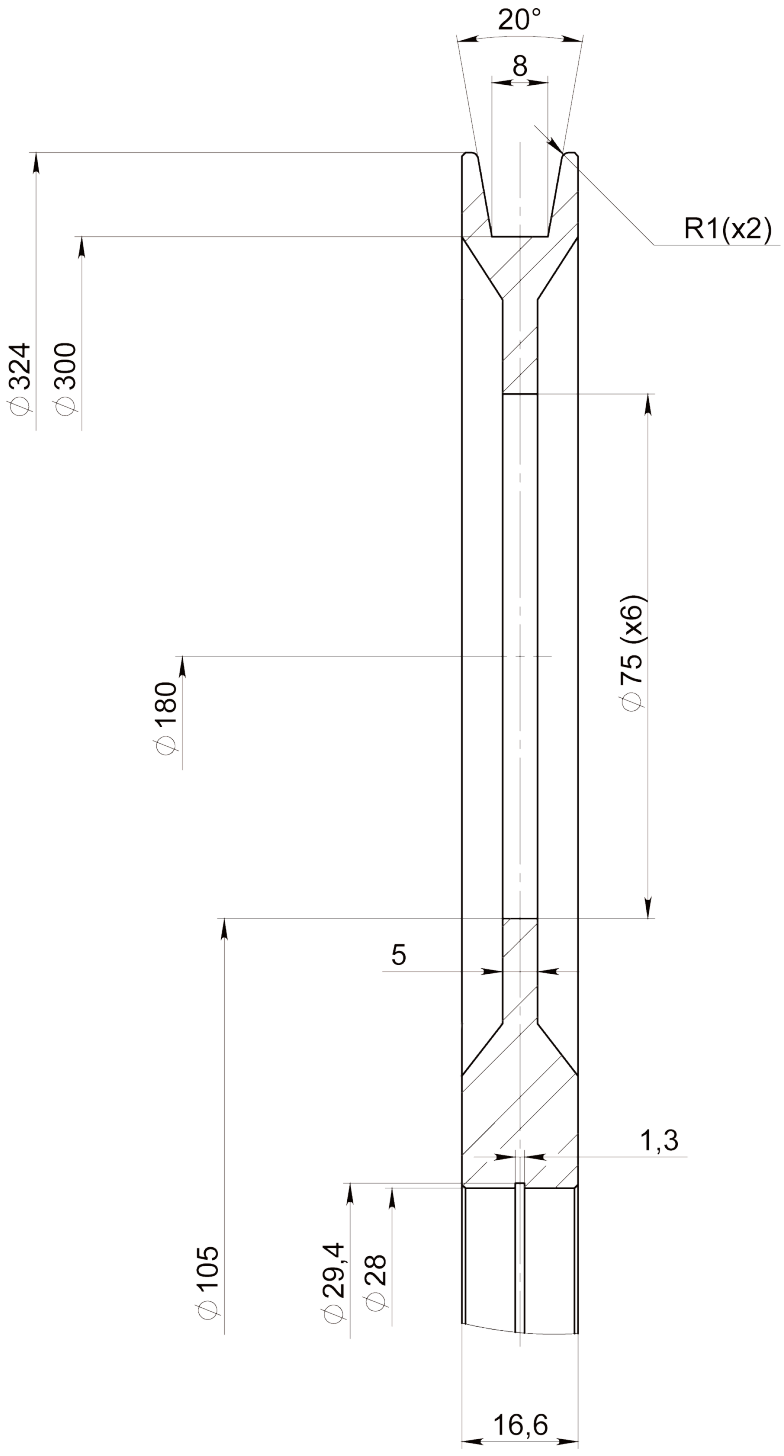

Article: 14836*

For Bearing:
6001-2Z or 6001-2RS

Drawing No. 1-401178-00

* Stock item

Subec AB **Hesselmans Torg 5** **SE- 131 54 Nacka** **Sweden** **Phone: +46-8-88 46 33** **Email: info@subec.se** **Web: www.subec.se**

Copyright © 2026 Subec

SHEAVE Ø300, 500MM

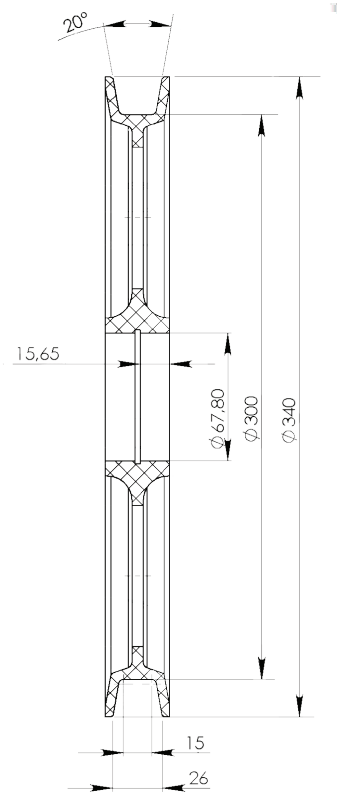



Article: 11620 Ø300mm, POM

For Bearing:
6008-2Z

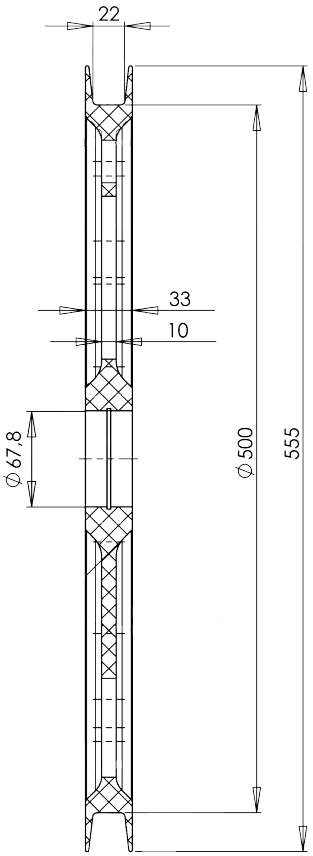



Article: 09207 Ø500mm, PA6
Weight: 2,9kg

Article: 11623 Ø500mm, POM
Weight: 3,6kg

For Bearing: 6008-2Z

Drawing No. 3-401150-00

Subec AB **Hesselmans Torg 5** **SE- 131 54 Nacka** **Sweden** **Phone: +46-8-88 46 33** **Email: info@subec.se** **Web: www.subec.se**

Copyright © 2026 Subec

SHEAVE Ø320MM

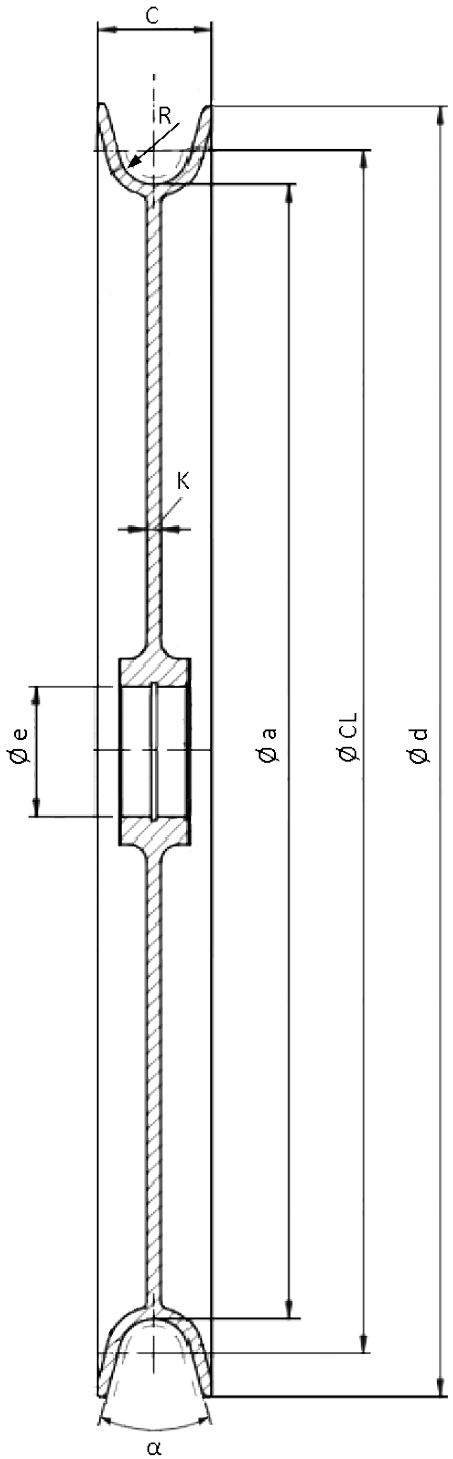



Article	Ø d	Ø CL	Ø a	Ø e	C	K	R	α°	Weight	Material	Groove
10454*	364	340	320	37	32	4	10	30	1,5kg	Aluminium	Ceramic Coating Polished Ra 1.0
10543	364	340	320	37	32	4	10	30		Steel	Tungsten Carbide Coating

Drawing No. 3-401285-00

* Stock item

Subec AB **Hesselmans Torg 5** **SE- 131 54 Nacka** **Sweden** **Phone: +46-8-88 46 33** **Email: info@subec.se** **Web: www.subec.se**

Copyright © 2026 Subec

CAPSTAN SHEAVE Ø400MM

Material: Aluminium

Polyurethane coated, Shore A 70





Article: 05819
Weight: 52kg

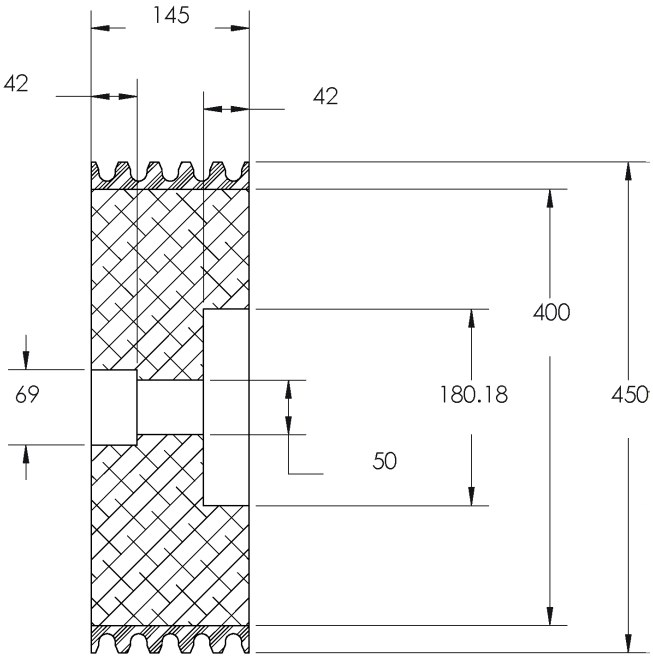

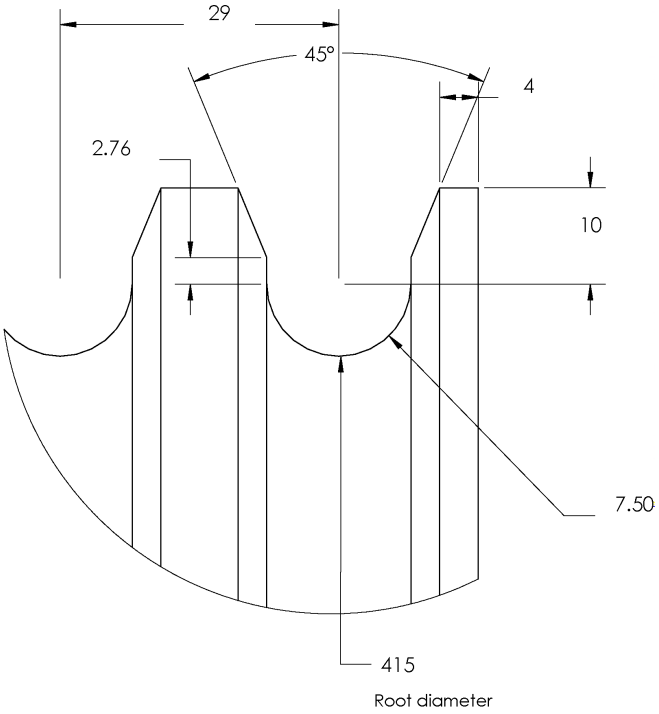

Drawing No. 3-400512-02

Subec AB **Hesselmans Torg 5** **SE- 131 54 Nacka** **Sweden** **Phone: +46-8-88 46 33** **Email: info@subec.se** **Web: www.subec.se**

Copyright © 2026 Subec

SHEAVE Ø440MM

Material: Aluminium

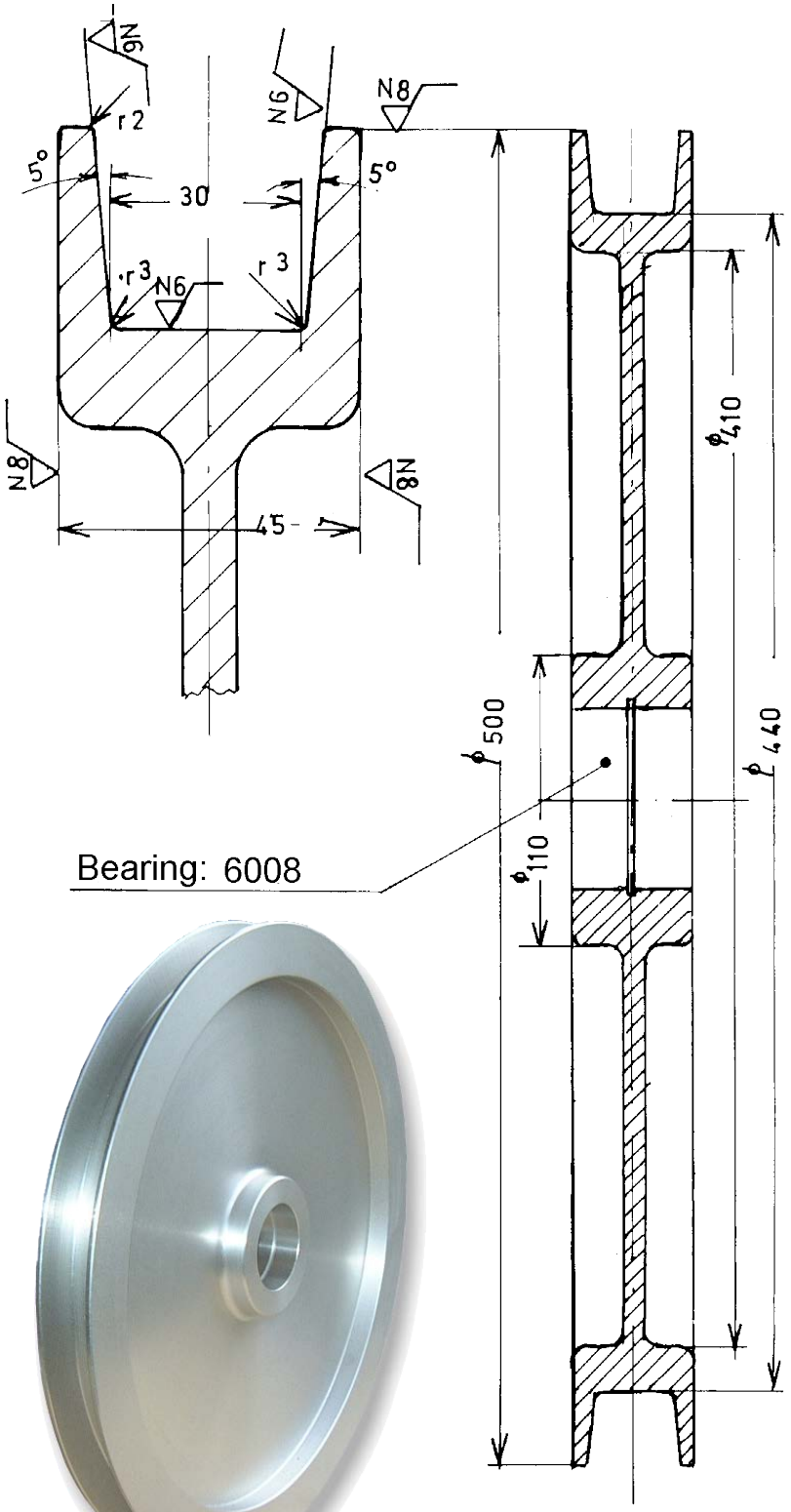

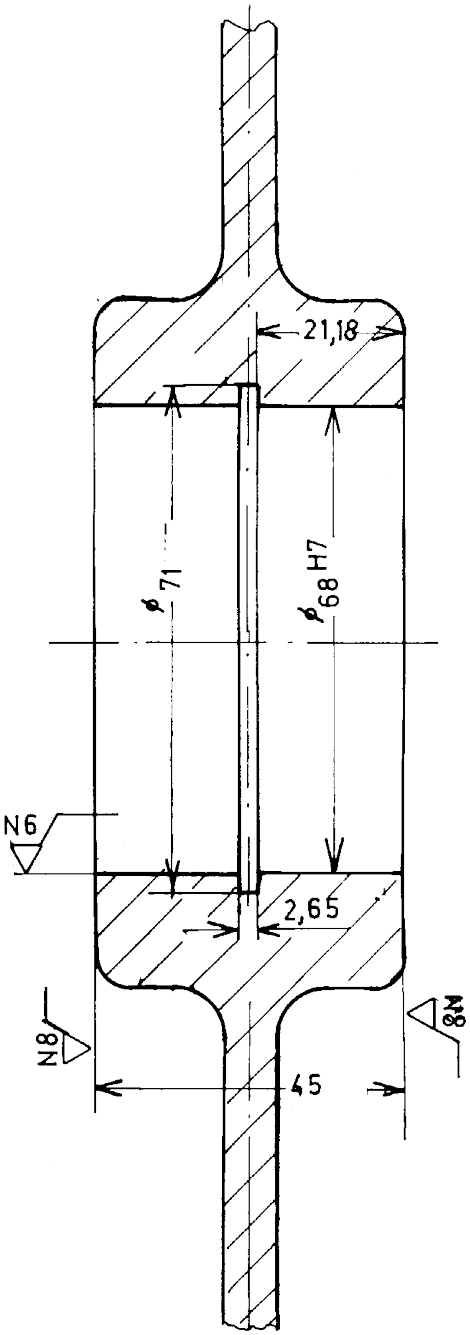

Article: 00081*
Weight: 6,6kg

Drawing No. 3-300109-00

* Stock item

Subec AB **Hesselmans Torg 5** **SE- 131 54 Nacka** **Sweden** **Phone: +46-8-88 46 33** **Email: info@subec.se** **Web: www.subec.se**

Copyright © 2026 Subec

SHEAVE Ø440MM
WITH HEIGHT ADJUSTABLE STAND

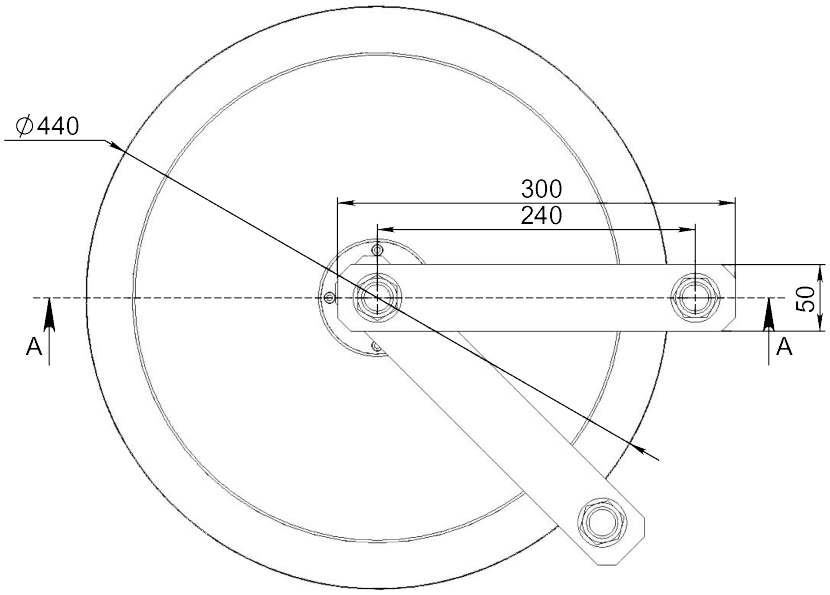

Option: With Guide Rollers

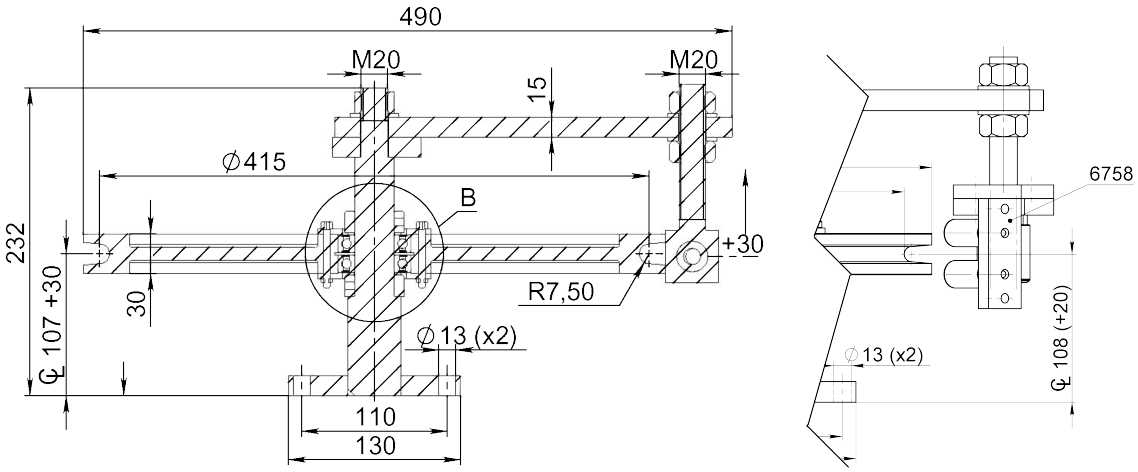

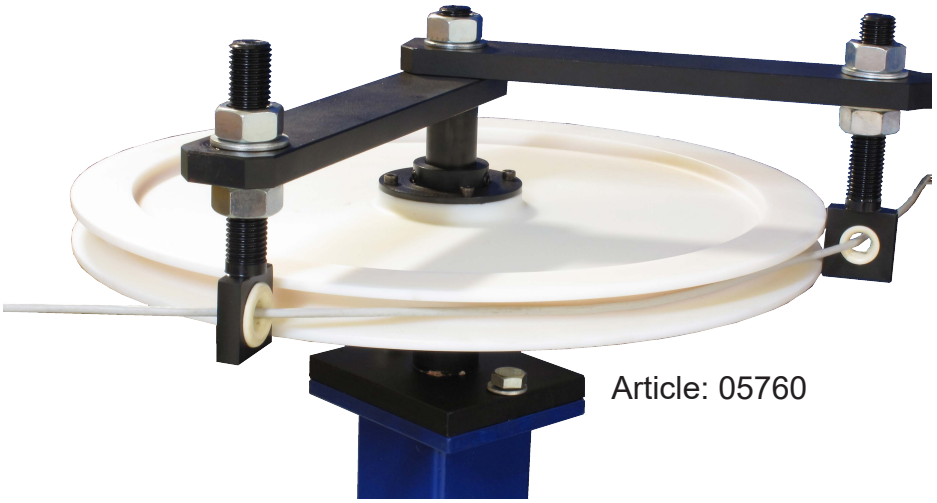

Article: 05760

Drawing No. 3-400430-00

Subec AB **Hesselmans Torg 5** **SE- 131 54 Nacka** **Sweden** **Phone: +46-8-88 46 33** **Email: info@subec.se** **Web: www.subec.se**

Copyright © 2026 Subec

SHEAVE Ø496MM

Material: Aluminium, Hard Anodised Groove

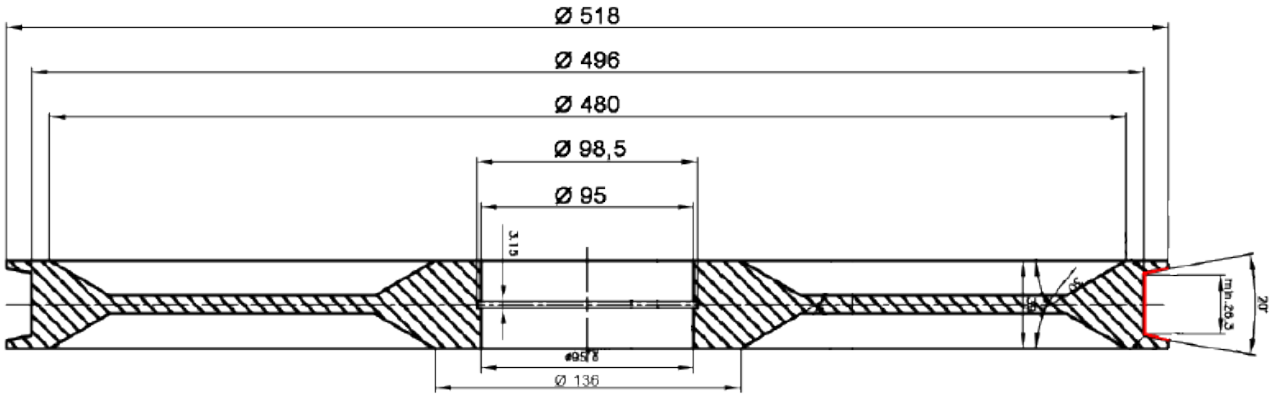



Article: 8290
Weight: 8,5kg

Drawing No. 3-400796-01

Subec AB **Hesselmans Torg 5** **SE- 131 54 Nacka** **Sweden** **Phone: +46-8-88 46 33** **Email: info@subec.se** **Web: www.subec.se**

Copyright © 2026 Subec

SHEAVE Ø500, 600MM

Material: Aluminium

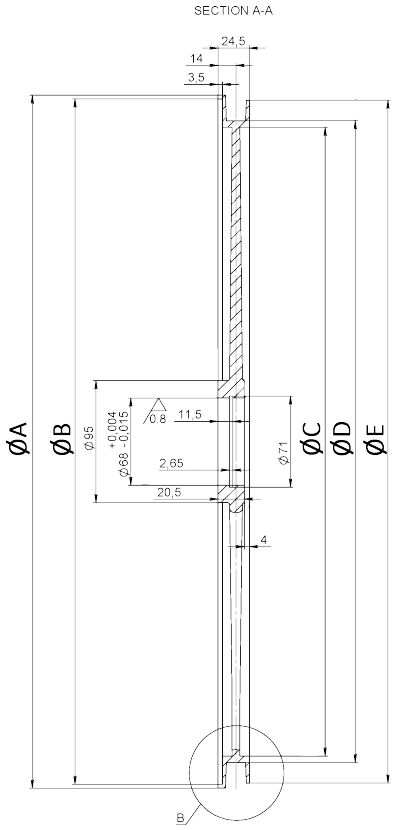

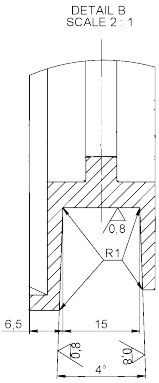

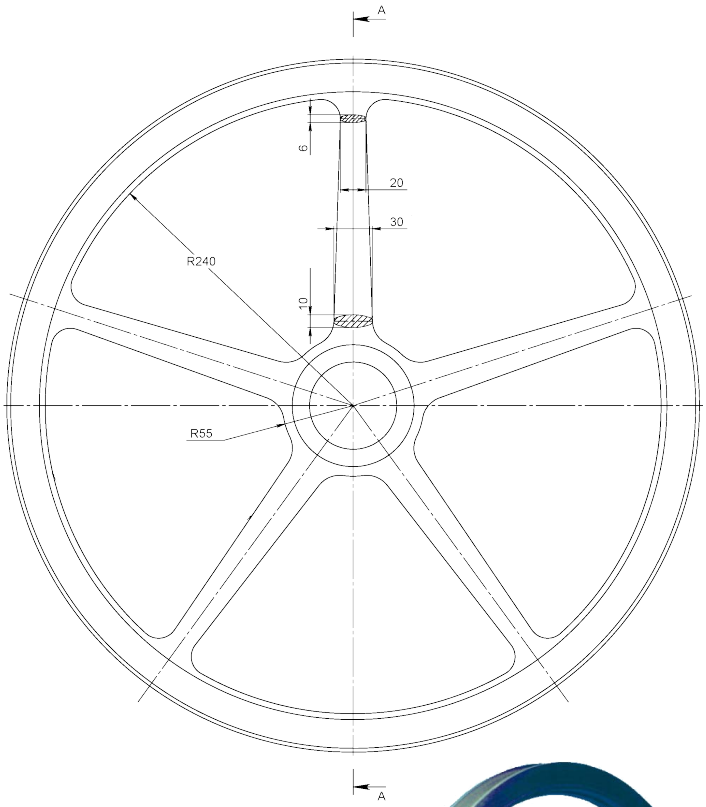

Option: Radius groove



Article	ØD	ØA	ØB	ØC	ØE	Weight	Groove
00080*	500	540	534	490	532	1,7kg	Flat
07358*	500	540	534	490	532	2.2kg	Flat, ceramic coat
07359*	600	640	634	590	632	2,4kg	Flat

Drawing No. 3-400312-00

* Stock item

Subec AB **Hesselmans Torg 5** **SE- 131 54 Nacka** **Sweden** **Phone: +46-8-88 46 33** **Email: info@subec.se** **Web: www.subec.se**

Copyright © 2026 Subec

SHEAVE Ø500, 600MM

Material: Aluminium

Option: Groove with ceramic coating
Article: 8487

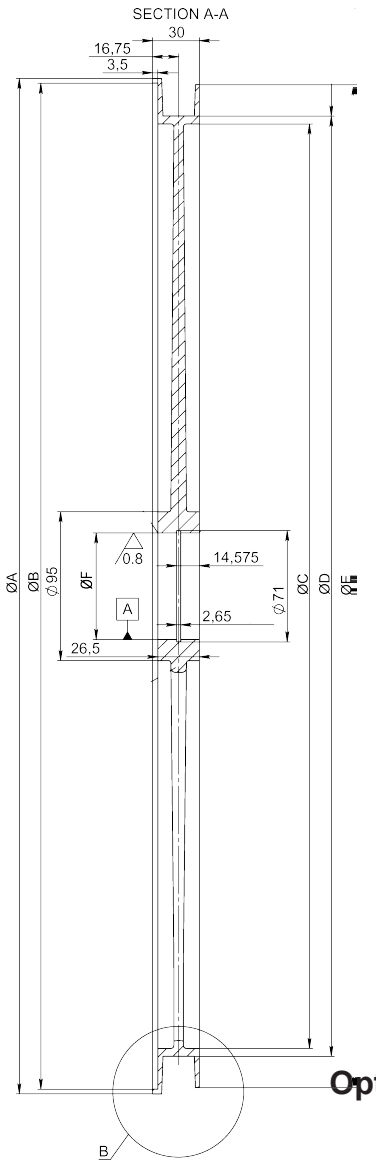

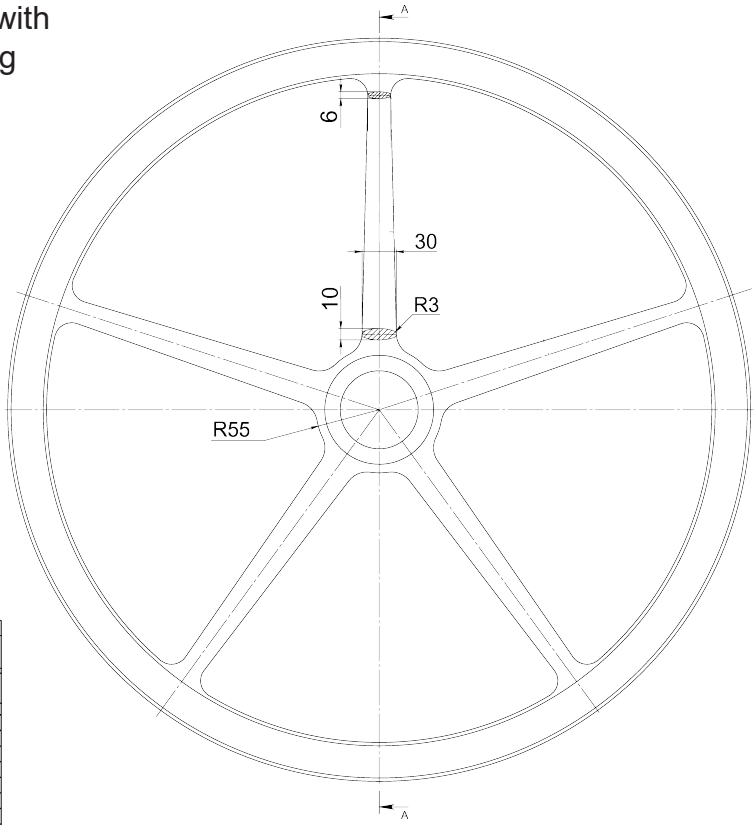

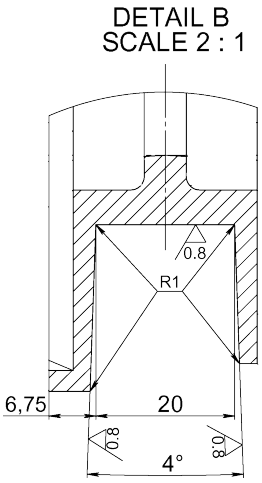

Option: Flat groove with ceramic coating
Article: 7409

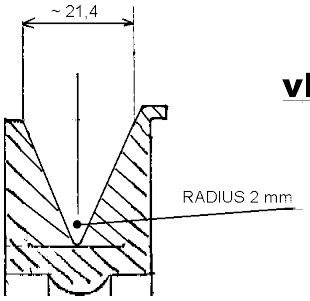

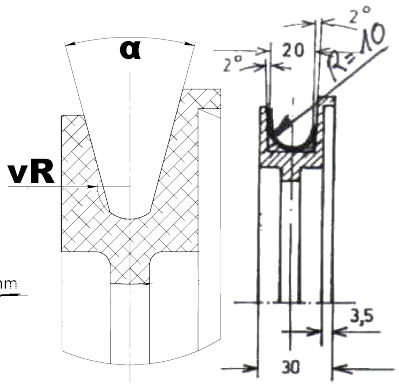



Article	ØD	ØA	ØB	ØC	ØE	ØF	α	vR	Groove	Weight	Note
03635*	500	540	534	490	532	68	30º	5	V-Round		
06124*	500	540	534	490	532	72	4º		Flat		Other bearing seat
00082*	500	548	542	490	540	68	4º		Flat	2,3kg	
09074*	500	548	542	490	540	72	4º		Flat	1,9kg	Other bearing seat
06843*	500	548	542	490	540	68	4º	10	Round	2,3kg	
03642	500	548	542	490	540	68	56	2	V	2,9kg	
03366A	600	648	642	590	640	68	4º		Flat	3,0kg	
10874*	800	848	842	790	840	68	4º		Flat	5,7kg	6 Spokes
14769*	800	848	842	790	840	68	4º		Flat	6,5kg	6 Spokes, 26mm Groove

Drawing No. 3-400337-00

* Stock item

Subec AB **Hesselmans Torg 5** **SE- 131 54 Nacka** **Sweden** **Phone: +46-8-88 46 33** **Email: info@subec.se** **Web: www.subec.se**

Copyright © 2026 Subec

SHEAVE Ø500, 800MM

Material: PUR Integral Hardfoam

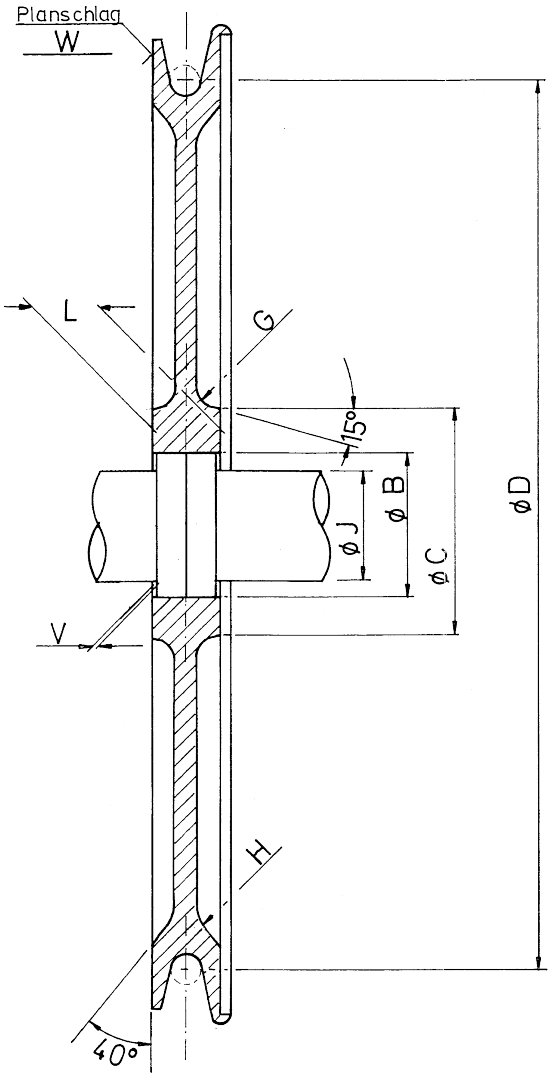



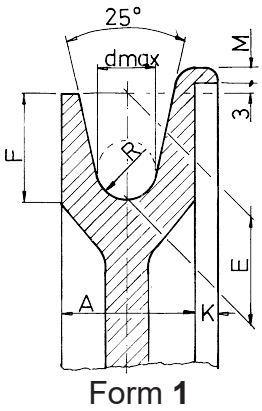

Form **1**

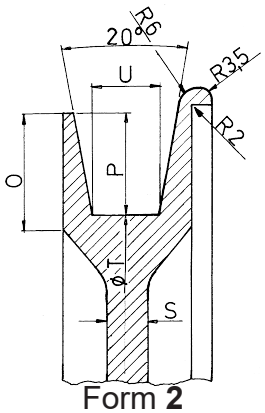

Form **2**

Form 1

Article	D	d	A_0^{+1}	B	C	E	F	G	H	J	K	L_0^{+1}	M	R	S	T	V	W	Bearing	Weight
01225*	500	16	38	80	120	30	30	10	18	50	6	38	5	9	12	480	3	2	6010-2z	3,3kg
16729*	500	16	38	80	120	30	30	10	18	50	6	38	5	12	12	480	3	2	6010-2z	
00862*	800	25	64	130	150	40	40	16	22	60	10	64	7	15	12	765	3	-	6312-2z	

Form 2

Article	D	d	A_0^{+1}	B	C	G	H	J	K	L_0^{+1}	M	O	P	S	T	U	V	W	Bearing	Weight
01448*	500	16	38	80	120	10	18	50	6	38	5	33	30	12	480	20	3	2	6010-2z	
01379*	800	25	64	130	150	16	22	60	10	64	7	45	40	12	765	30	3	-	6312-2z	11,3kg

Drawing No. 1-400332-00

* Stock item

Subec AB **Hesselmans Torg 5** **SE- 131 54 Nacka** **Sweden** **Phone: +46-8-88 46 33** **Email: info@subec.se** **Web: www.subec.se**

Copyright © 2026 Subec

SHEAVE Ø600MM

Material: Aluminium

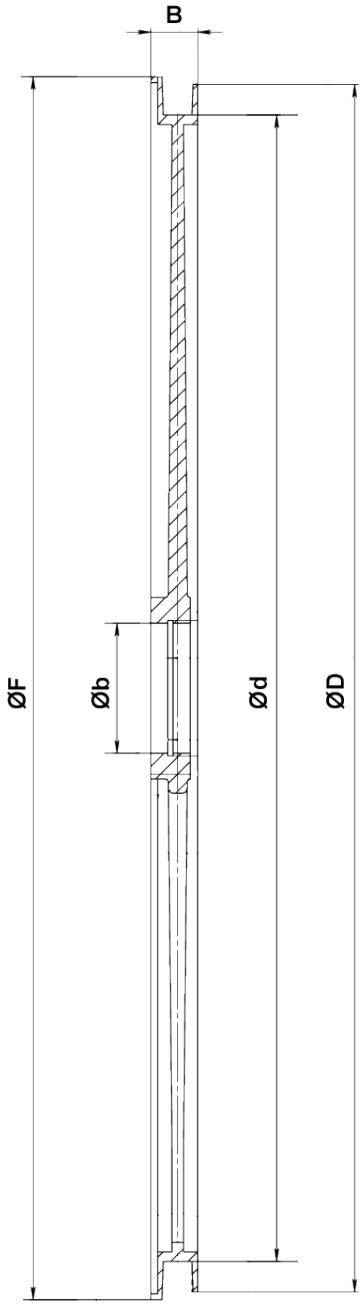

Option: With protection plates



Article: 07406*

Article	Ød	ØD	ØF	Øb	B	Bearing	Groove	Weight
07406*	600	640	650	68	48.5	6008-2z	32mm Flat	5,3kg
07490*	600	632	640	68	24.5	61909 RZ	15mm Flat	2kg

Drawing No. 1-400804-00

* Stock item

Subec AB **Hesselmans Torg 5** **SE- 131 54 Nacka** **Sweden** **Phone: +46-8-88 46 33** **Email: info@subec.se** **Web: www.subec.se**

Copyright © 2026 Subec

SHEAVE Ø600MM

Material: Aluminium





Article: 07332*
Weight: 2,6kg

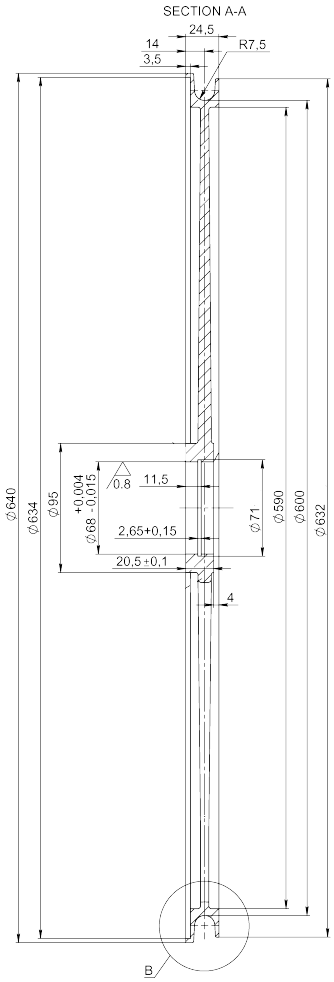

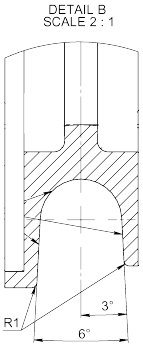

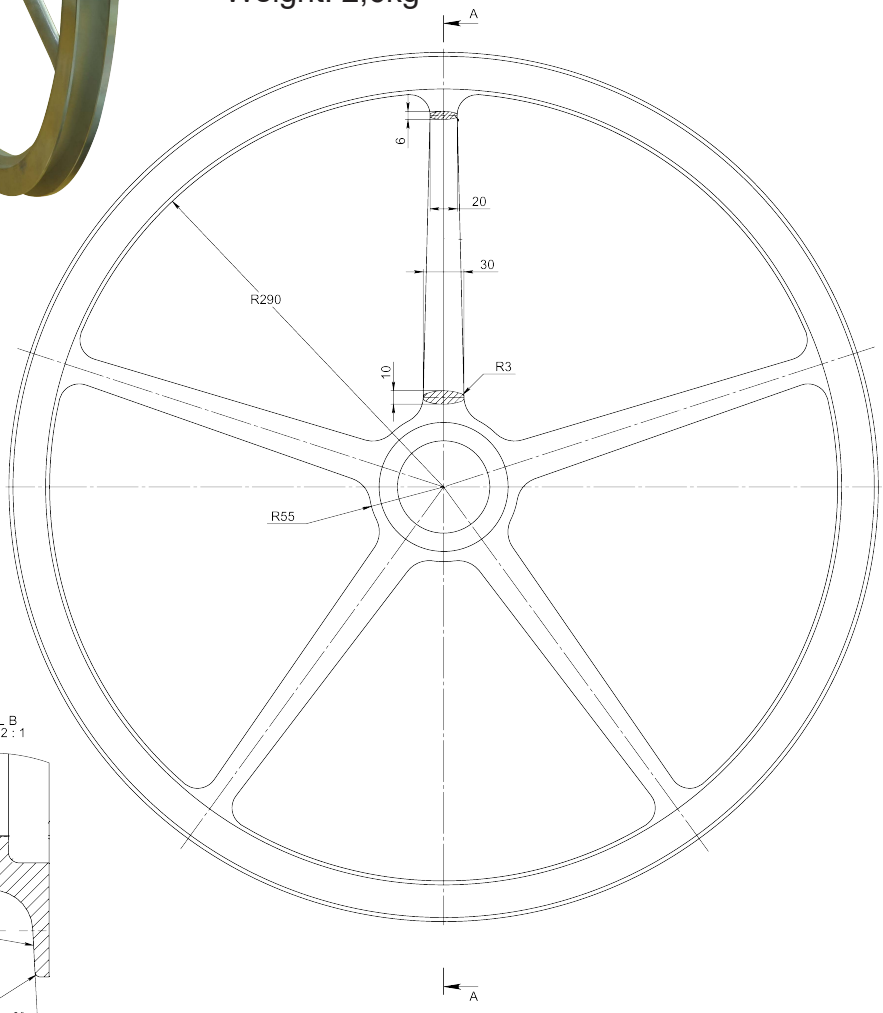

Drawing No. 3-400312-00

* Stock item

Subec AB **Hesselmans Torg 5** **SE- 131 54 Nacka** **Sweden** **Phone: +46-8-88 46 33** **Email: info@subec.se** **Web: www.subec.se**

Copyright © 2026 Subec

SHEAVE Ø630MM

Material: Aluminium



Article: 00817*
Weight: 15kg



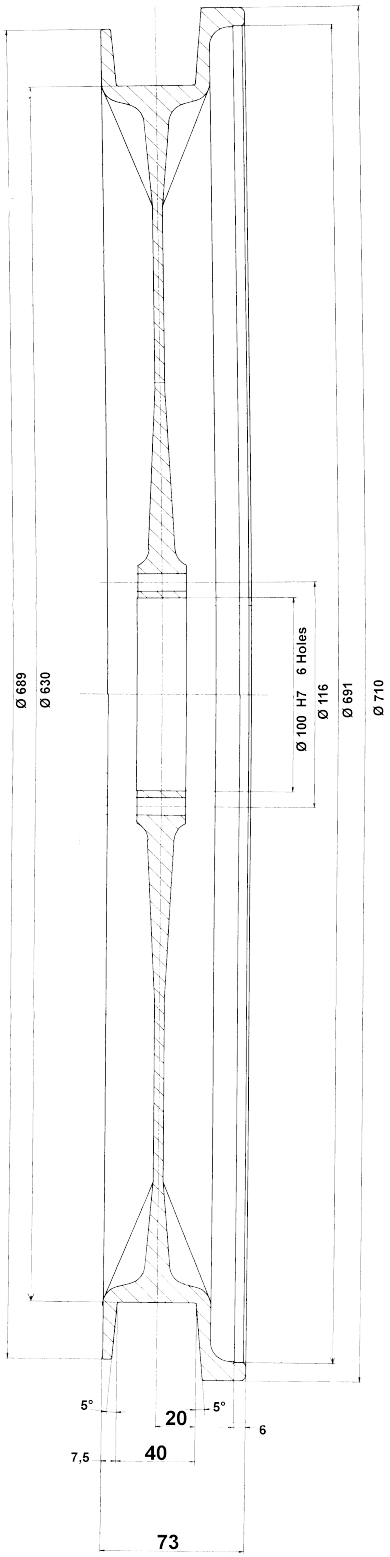

Drawing No. 3-400424-00

* Stock item

Subec AB **Hesselmans Torg 5** **SE- 131 54 Nacka** **Sweden** **Phone: +46-8-88 46 33** **Email: info@subec.se** **Web: www.subec.se**

Copyright © 2026 Subec

SHEAVE Ø800MM

Material: Aluminium

Execution 1

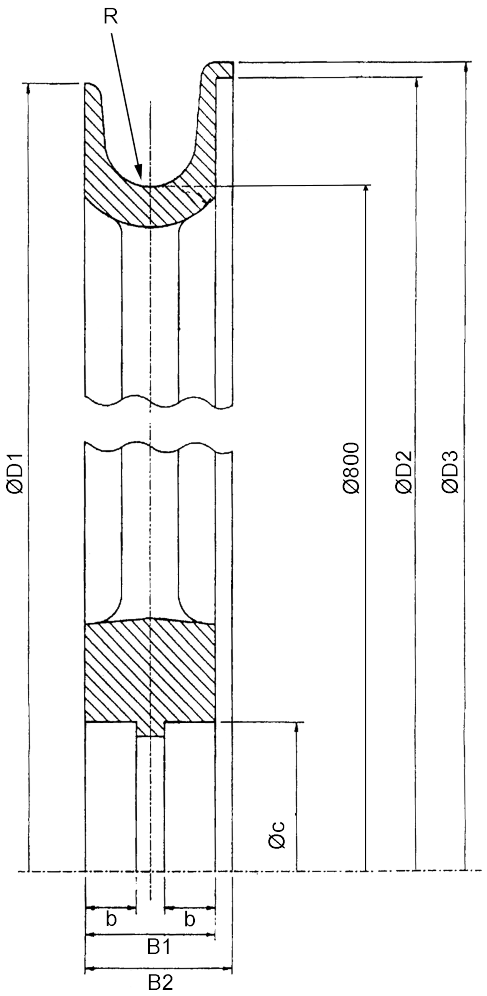

Execution 2

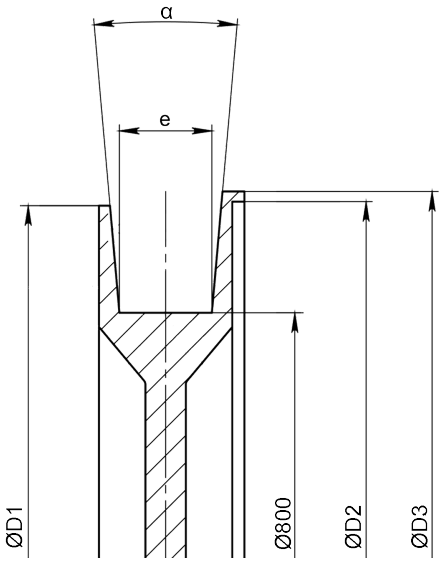



Article: 07035*

Option:
Alt, Bearing seat
Groove coating

Article	Øc	b	B1	B2	D1	D2	D3	e	R	Groove	Bearing	Execution	Weight
08200	65	-	66	72	906	910	920	45,80	-	-	Keygroove	2	21,2kg
07035*	95	18	66	72	906	910	920	-	25	Cr2O3	6012-2Z	1	26kg
00083*	100	18	66	72	906	910	920	-	25	-	6013-2Z	1	21,2kg
08606	100	18	66	72	906	910	920	45,80	-	Ceramic	6013-2Z	2	-
15034	100	18	66	72	906	910	920	45,80	-	-	6013-2Z	2	-

Drawing No. 1-400278-01

* Stock item

Subec AB **Hesselmans Torg 5** **SE- 131 54 Nacka** **Sweden** **Phone: +46-8-88 46 33** **Email: info@subec.se** **Web: www.subec.se**

Copyright © 2026 Subec

SHEAVE Ø800MM

Material: Aluminium



Article: 00743
Weight: 27kg



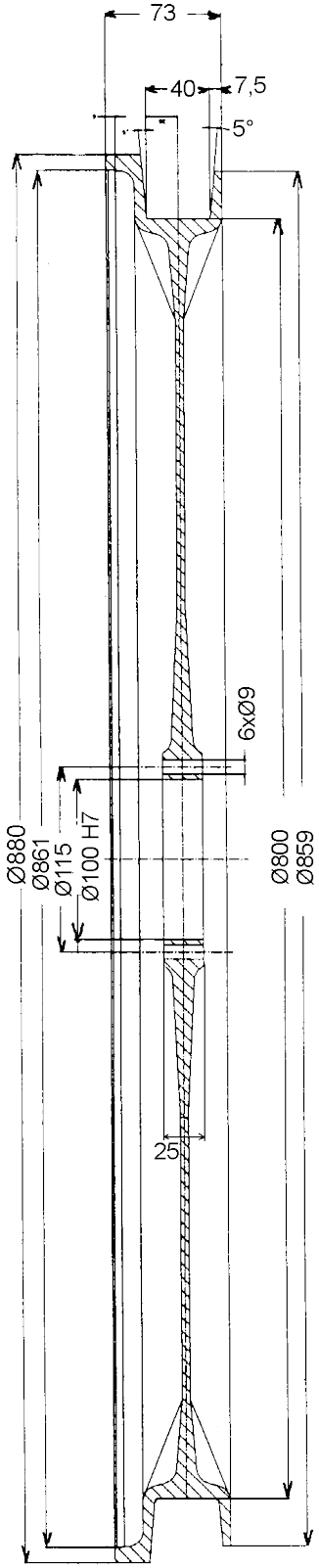

Drawing No. 3-400417-00

Subec AB **Hesselmans Torg 5** **SE- 131 54 Nacka** **Sweden** **Phone: +46-8-88 46 33** **Email: info@subec.se** **Web: www.subec.se**

Copyright © 2026 Subec

SHEAVE Ø900MM

Material: Aluminium

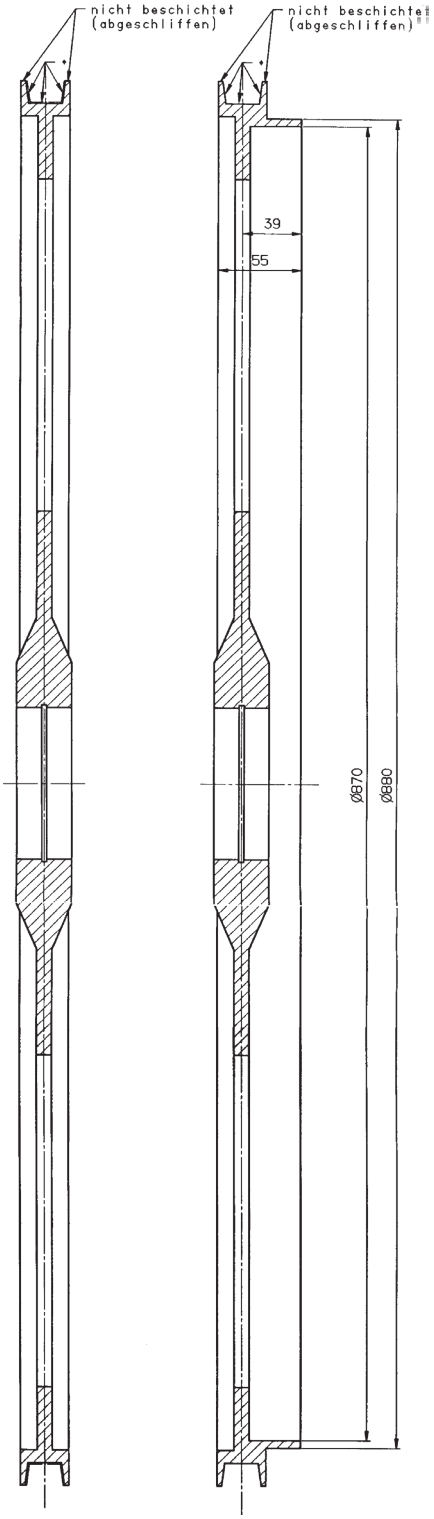



Article: 04805
Weight: 17,5kg



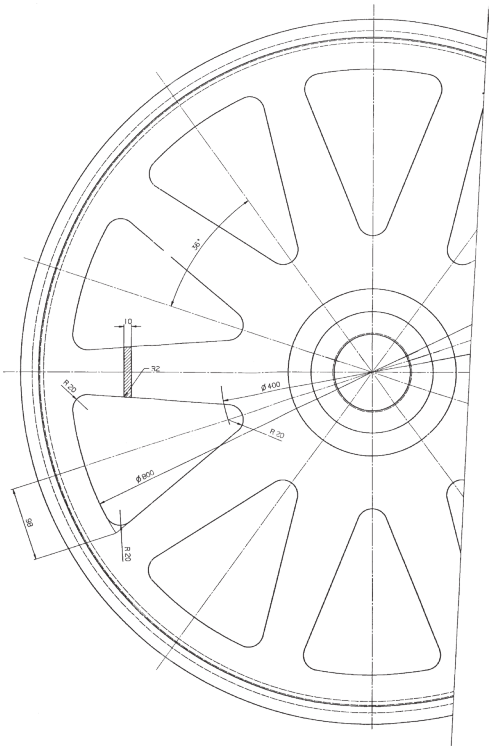

Drawing No. 3-400463-00

Subec AB **Hesselmans Torg 5** **SE- 131 54 Nacka** **Sweden** **Phone: +46-8-88 46 33** **Email: info@subec.se** **Web: www.subec.se**

Copyright © 2026 Subec

SHEAVE Ø1000MM

Material: Aluminium

Conformal Polymer Coating

Preferably used in wet surroundings, like cooling lines

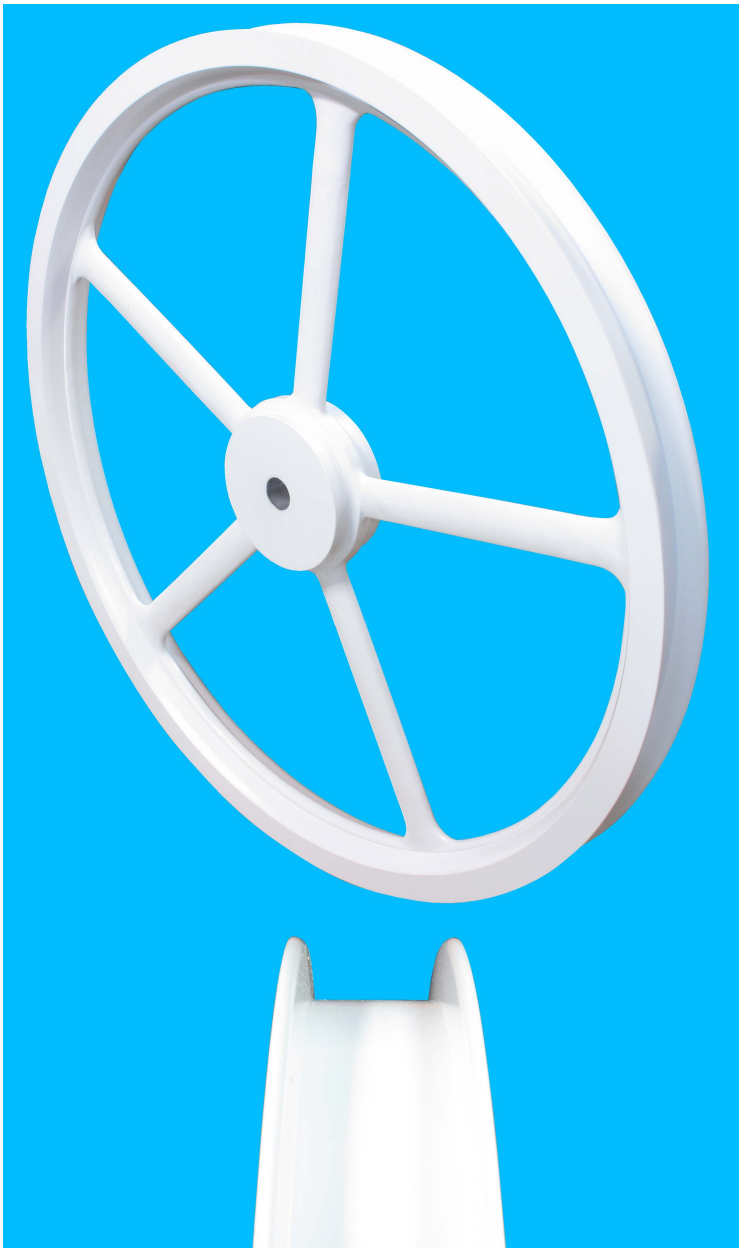

Article: 07969

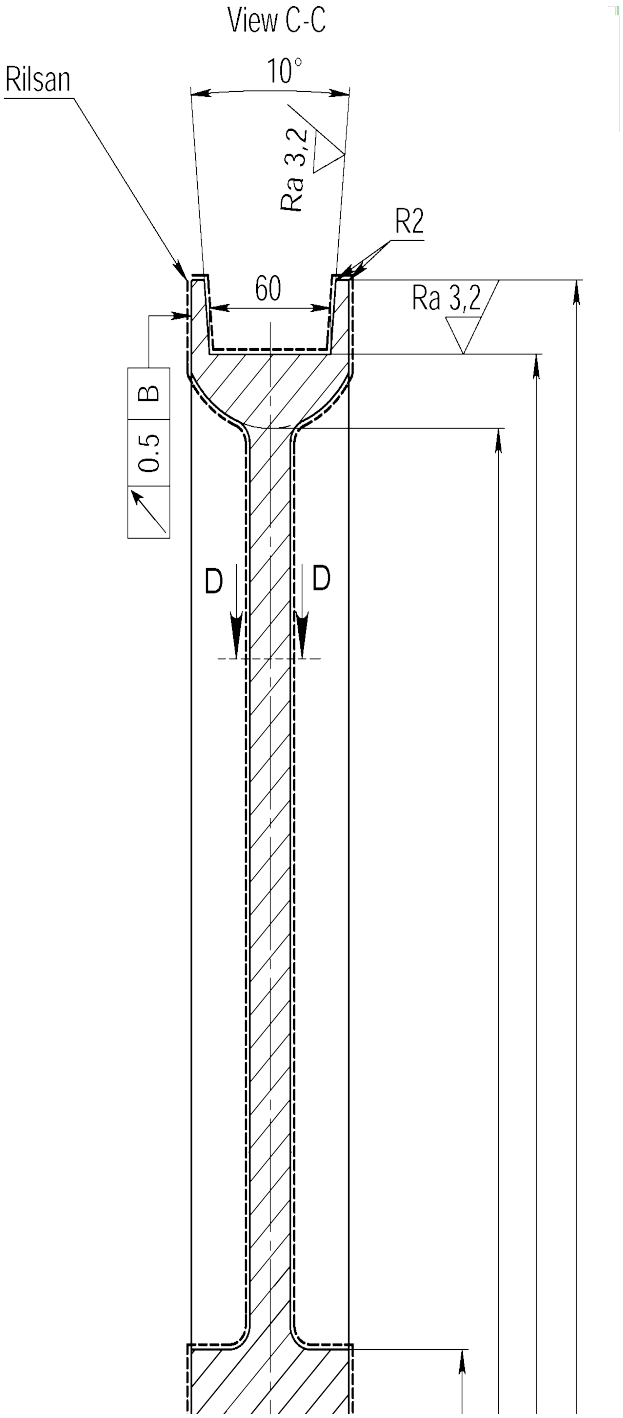

Drawing No. 1-400943-00

Subec AB
Hesselmans Torg 5
SE- 131 54 Nacka
Sweden
Phone: +46-8-88 46 33
Email: info@subec.se
Web: www.subec.se

Copyright © 2026 Subec

SHEAVE Ø1000MM

Material: Aluminium

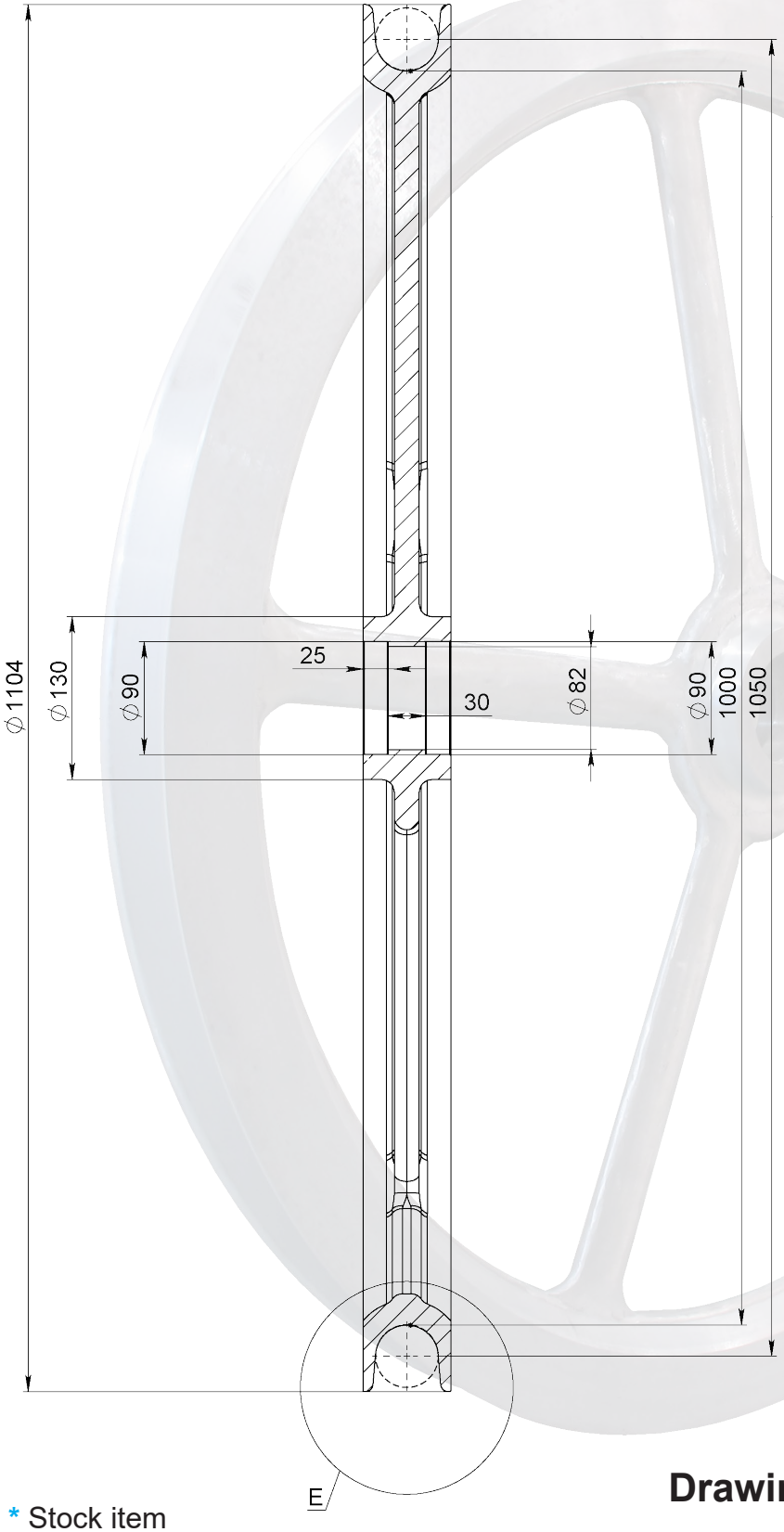

With Overlap
Article: 07487*
Weight: 29kg

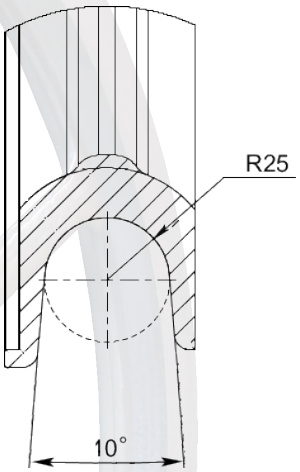

No Overlap
Article: 07912
Weight: 29kg

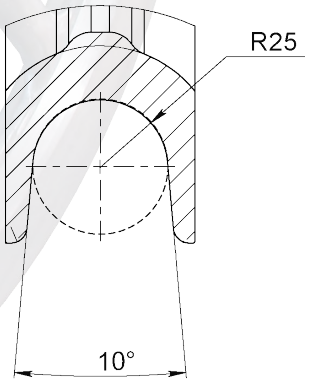

Drawing No. 1-400943-00

* Stock item

Subec AB **Hesselmans Torg 5** **SE- 131 54 Nacka** **Sweden** **Phone: +46-8-88 46 33** **Email: info@subec.se** **Web: www.subec.se**

Copyright © 2026 Subec

SHEAVE Ø1200, 1600MM

Material: Aluminium

Execution 1 Execution 2

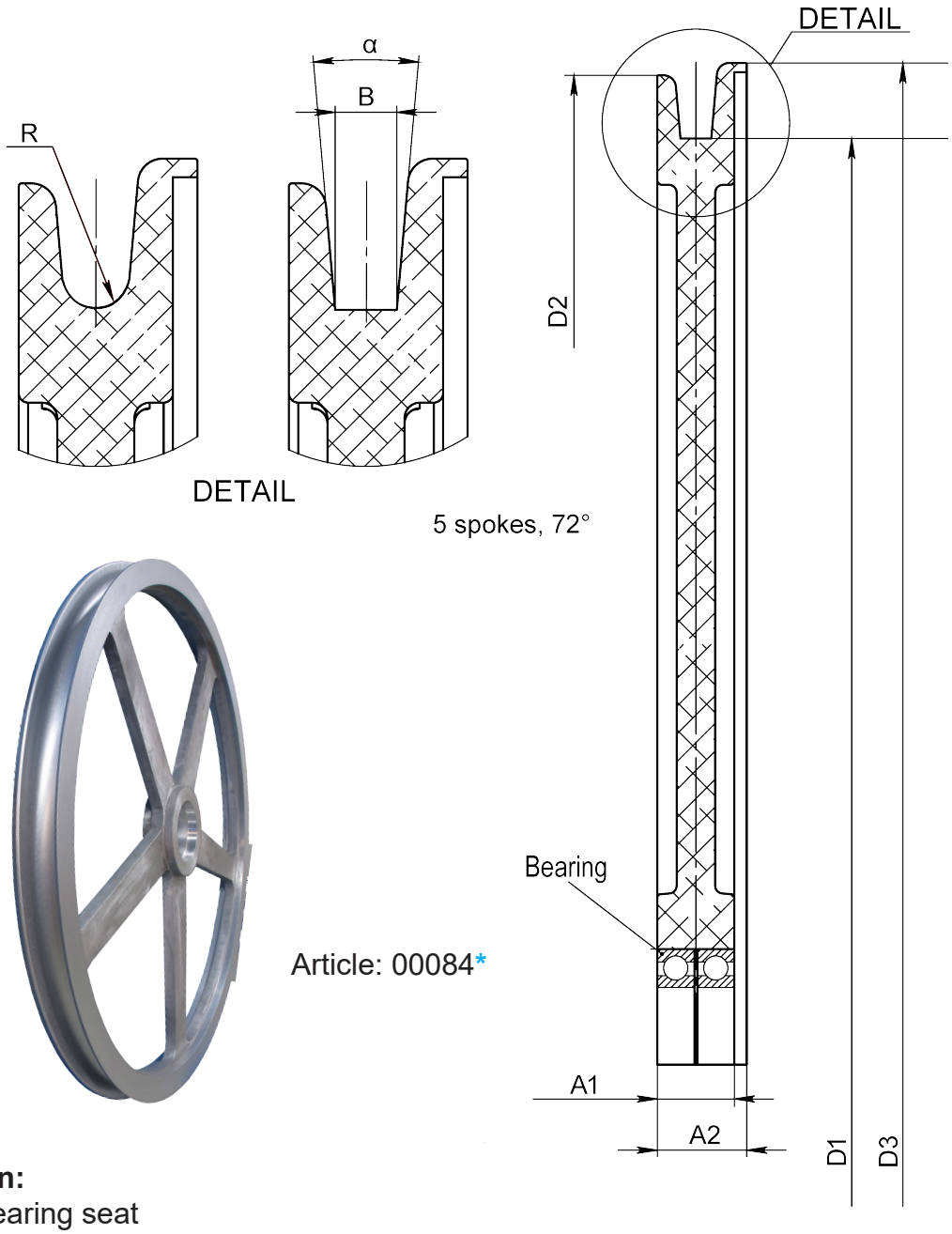

Article: 00084*

Option:
Alt, Bearing seat
Groove coating

Article	D1	D2	D3	A1	A2	B	α	R	Bearing	Execution	Weight
17007	1200	1282	1298	50	58	20	10°	-	6020-2Z, d=100	2	
12645	1200	1282	1298	75	83	-	-	20	6016-2Z, d=80	1	46,3kg
00084	1200	1282	1298	75	83	-	-	27	6020-2Z, d=100	1	49kg
06696	1600	1682	1698	75	83	-	-	27	6020-2Z, d=100	1	

Drawing No. 395-101-B

* Stock item

Subec AB **Hesselmans Torg 5** **SE- 131 54 Nacka** **Sweden** **Phone: +46-8-88 46 33** **Email: info@subec.se** **Web: www.subec.se**

Copyright © 2026 Subec

SHEAVE Ø1250MM

Material: PA6

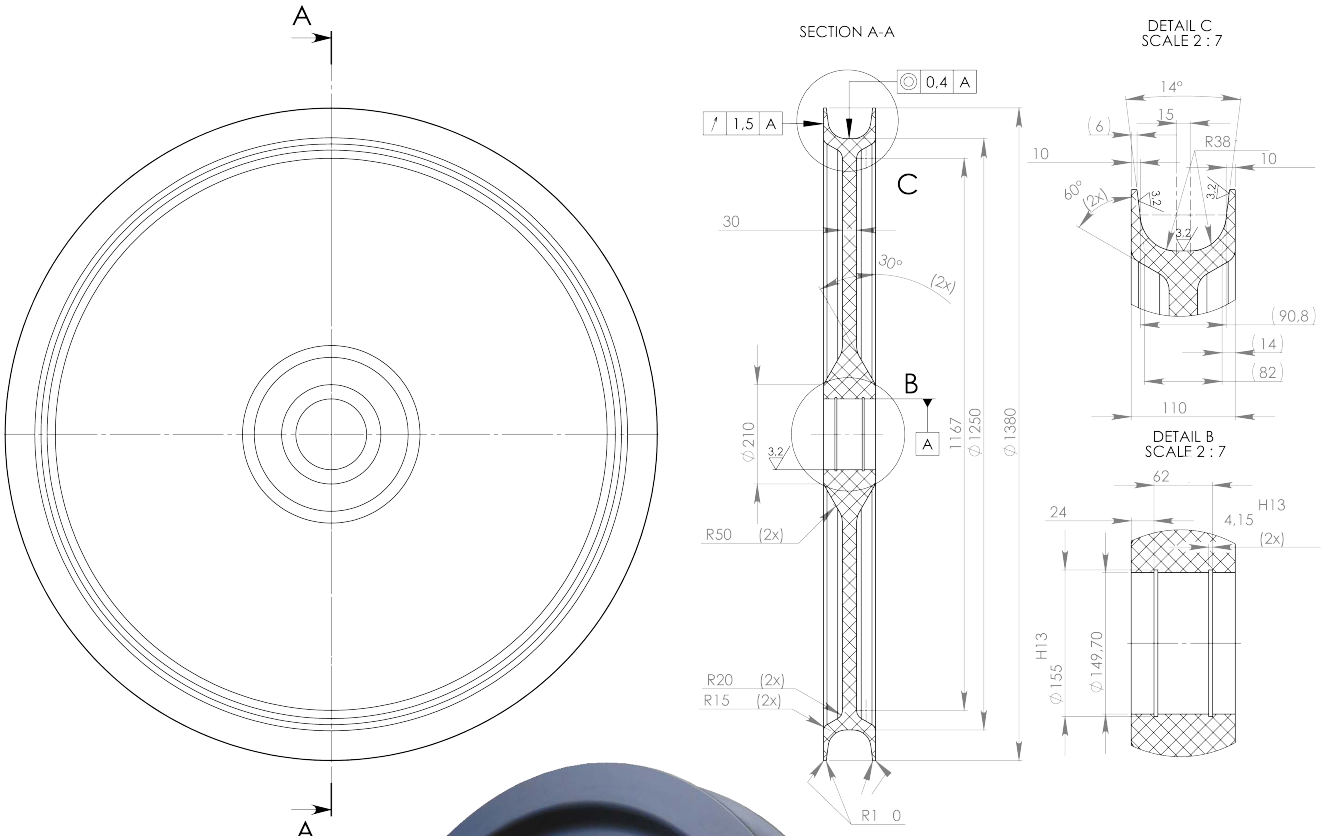



Article: 08227
Weight: 60,6kg

Drawing No. 1-400385-00

Subec AB **Hesselmans Torg 5** **SE- 131 54 Nacka** **Sweden** **Phone: +46-8-88 46 33** **Email: info@subec.se** **Web: www.subec.se**

Copyright © 2026 Subec

SHEAVE Ø1600MM

Material: Aluminium

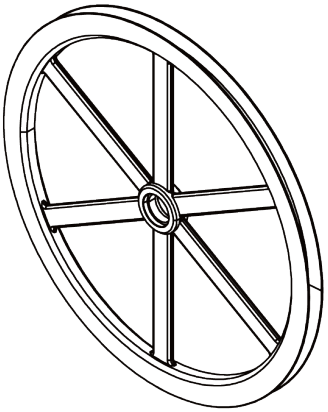

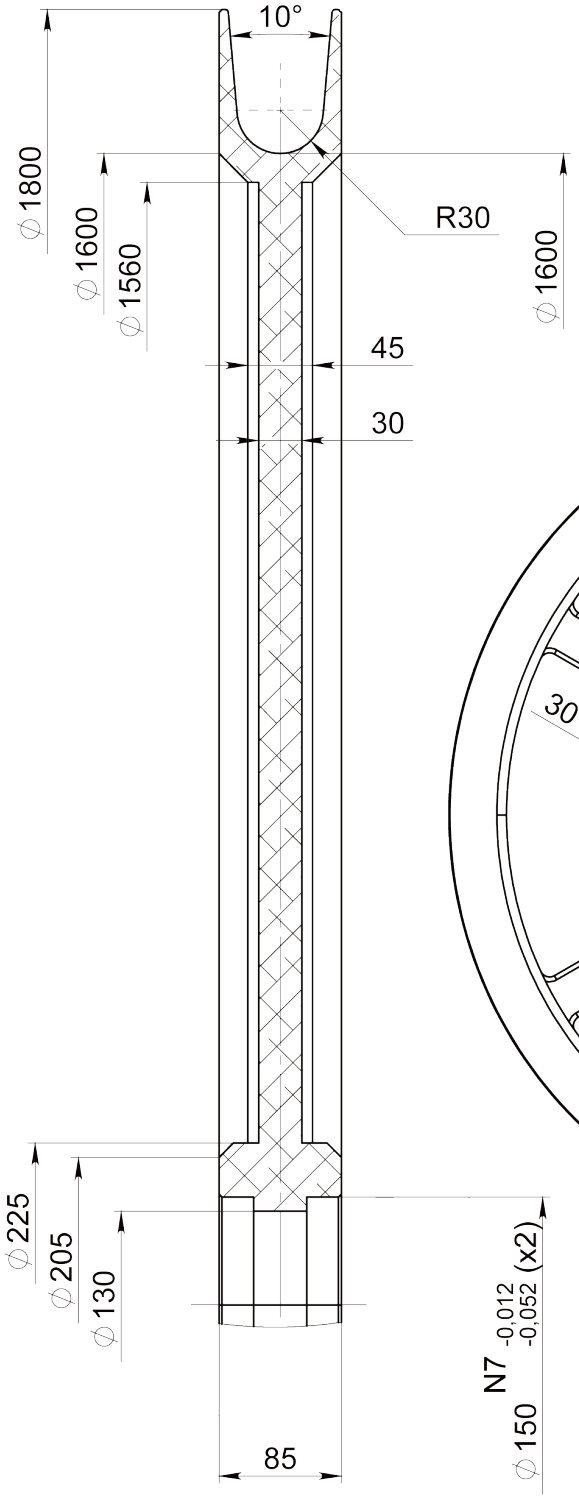

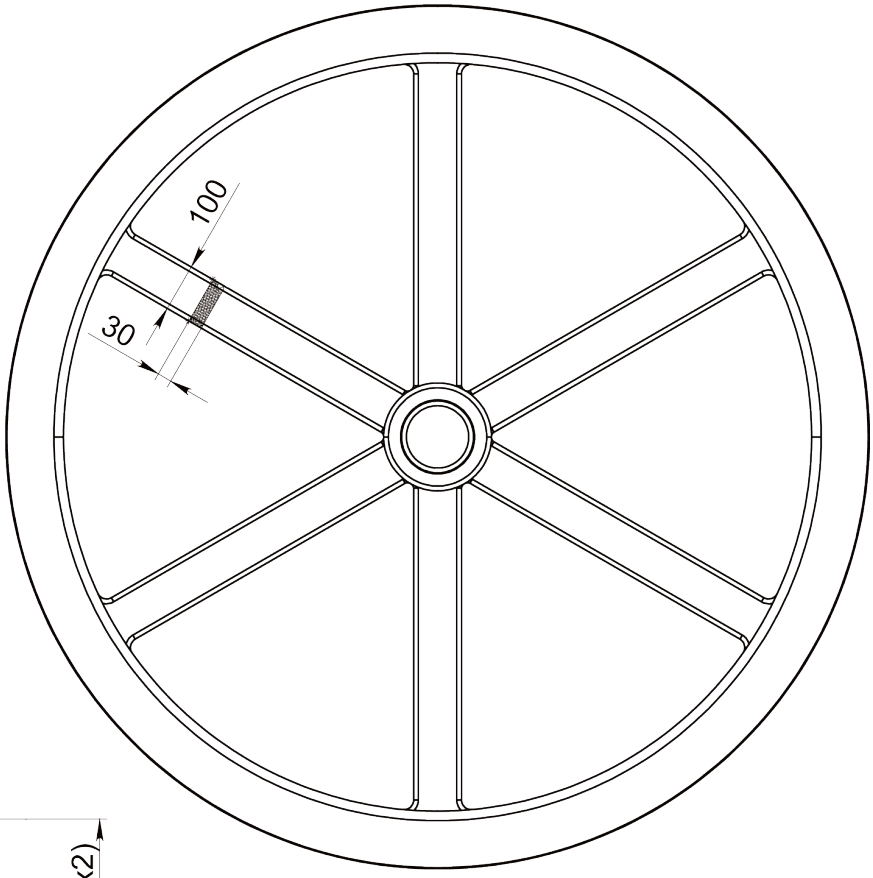

Article: 13718
Weight: 89kg

Drawing No. 3-400269-00

Subec AB **Hesselmans Torg 5** **SE- 131 54 Nacka** **Sweden** **Phone: +46-8-88 46 33** **Email: info@subec.se** **Web: www.subec.se**

Copyright © 2026 Subec

SHEAVE Ø2000MM

Material: Aluminium

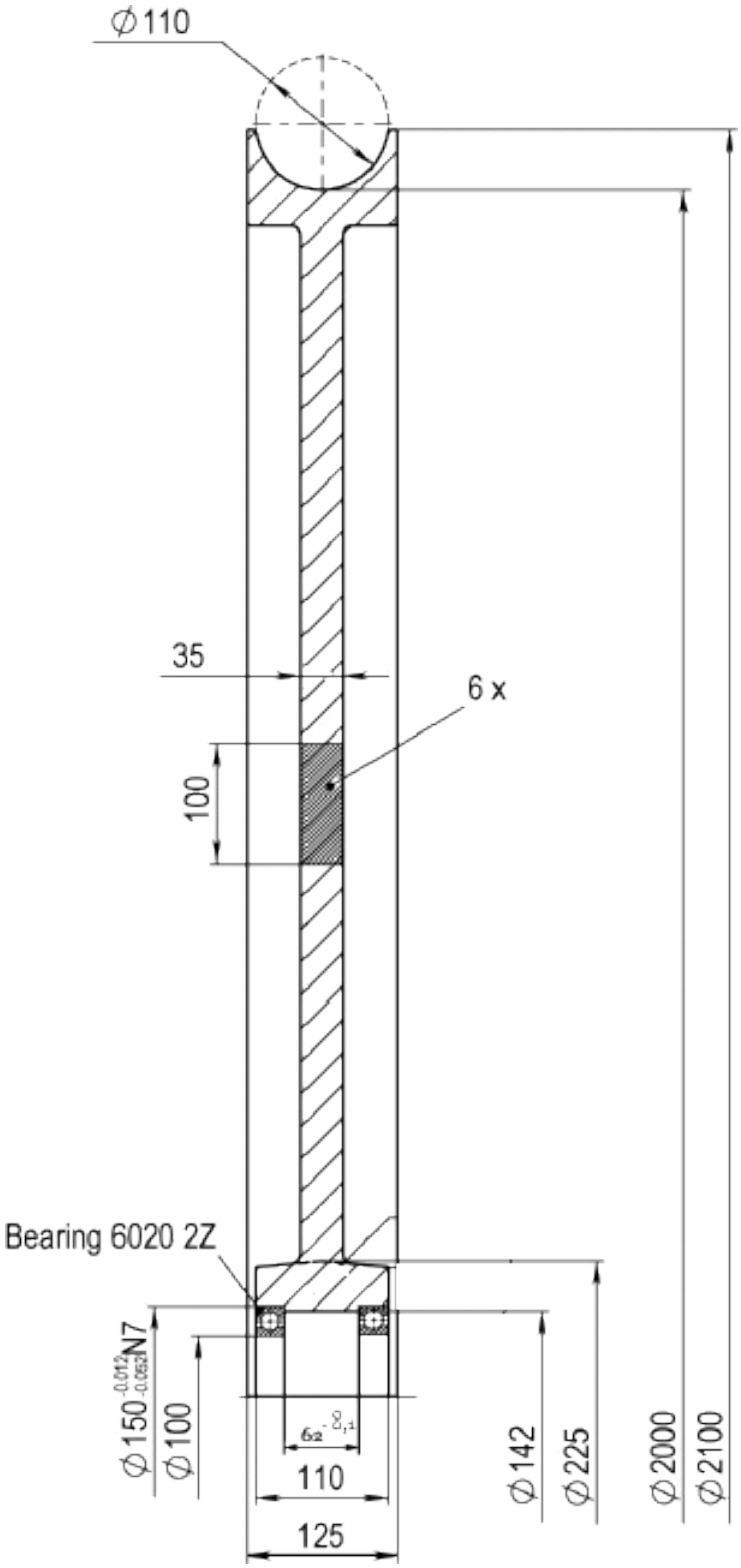



Article: 05559
Weight: 150kg

Drawing No. 3-400269-00

Subec AB **Hesselmans Torg 5** **SE- 131 54 Nacka** **Sweden** **Phone: +46-8-88 46 33** **Email: info@subec.se** **Web: www.subec.se**

Copyright © 2026 Subec

SHEAVE ACCESSORIES



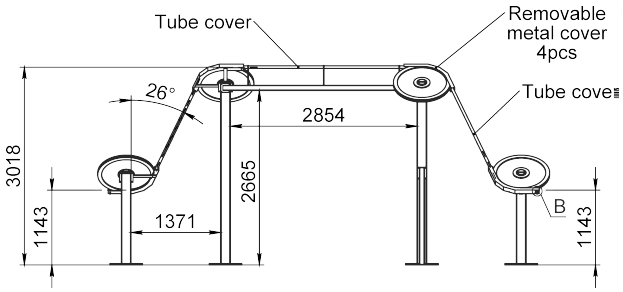

Article: 10904
Wire Safe Path Deviation System

Subec AB **Hesselmans Torg 5** **SE- 131 54 Nacka** **Sweden** **Phone: +46-8-88 46 33** **Email: info@subec.se** **Web: www.subec.se**

Copyright © 2026 Subec

ROLLER ARC



The advantages of roller arcs compared to sheaves:

- Roller arcs can be produced in small quantities at a reasonable price where sheaves require a mould form for almost all dimensions and widths.
- At large radiuses sheaves are a safety issue because of the rotation of a large object. Roller arcs on the other hand always have small rotating rollers regardless of the radius of the roller arc.
- A Roller arc requires less space for partial turns where a sheave requires the full diameter regardless of the degree of the turn.
- Roller arcs give the possibility to use different roller materials, i.e. plastic, aluminum, steel, etc, while still providing the advantages of a strong body in steel.
- Roller arcs give the possibility to use different groove shapes even at low quantities for a reasonable price.

The advantage of sheaves compared to roller arcs:

- A sheave provides a continuous, flat, even surface for the product.

Subec AB **Hesselmans Torg 5** **SE- 131 54 Nacka** **Sweden** **Phone: +46-8-88 46 33** **Email: info@subec.se** **Web: www.subec.se**

Copyright © 2026 Subec

ROLLER ARC ACCESSORIES

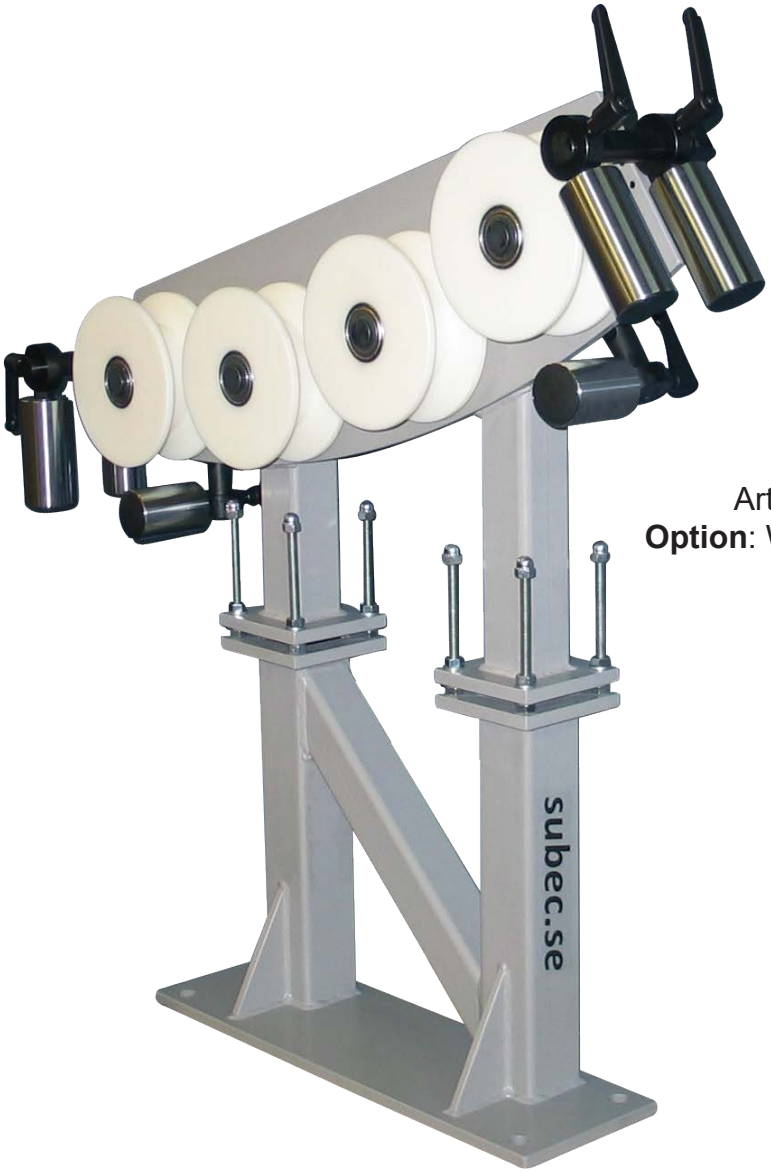

Article: 7708
Option: With inlet guides

Article: 9870
Option: With siderollers



Subec AB **Hesselmans Torg 5** **SE- 131 54 Nacka** **Sweden** **Phone: +46-8-88 46 33** **Email: info@subec.se** **Web: www.subec.se**

Copyright © 2026 Subec

ROLLER ARC STAND

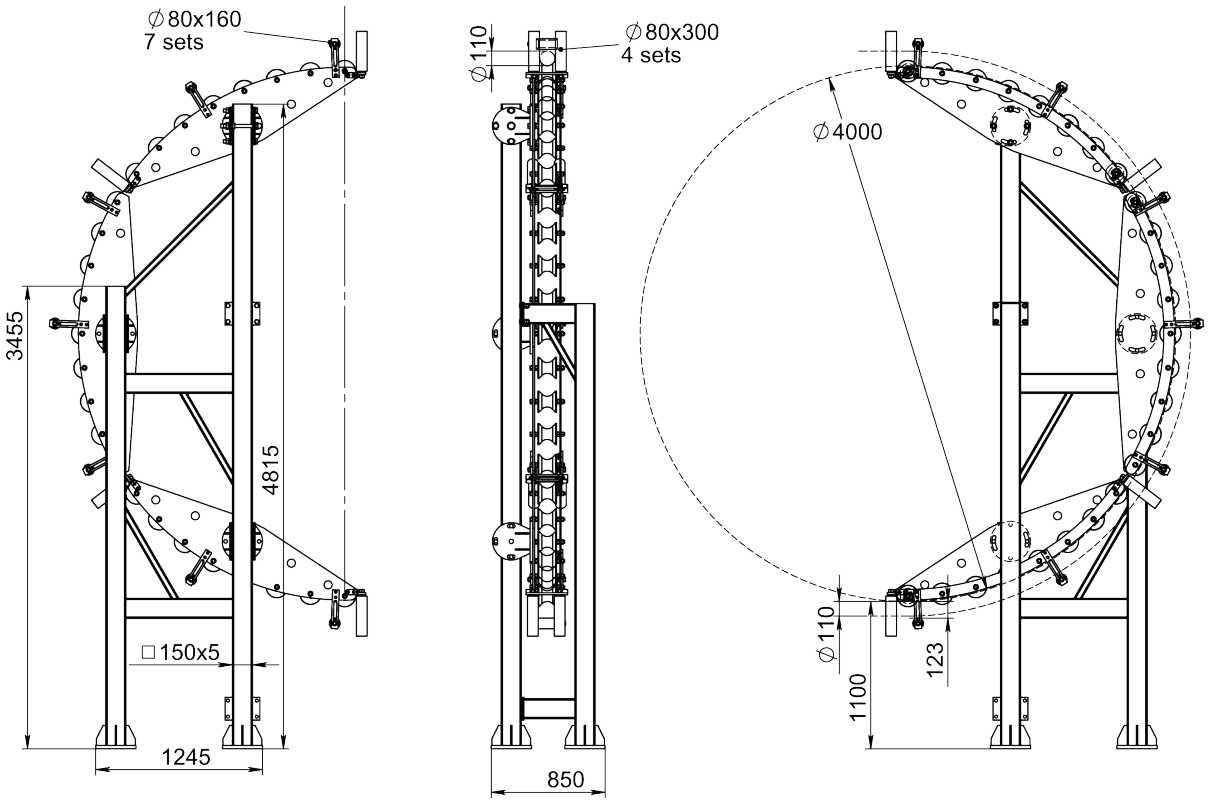

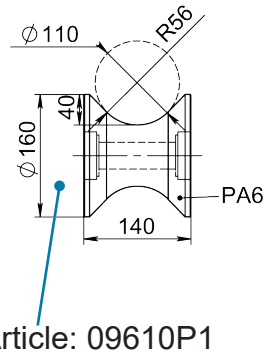

Article: 09610P1

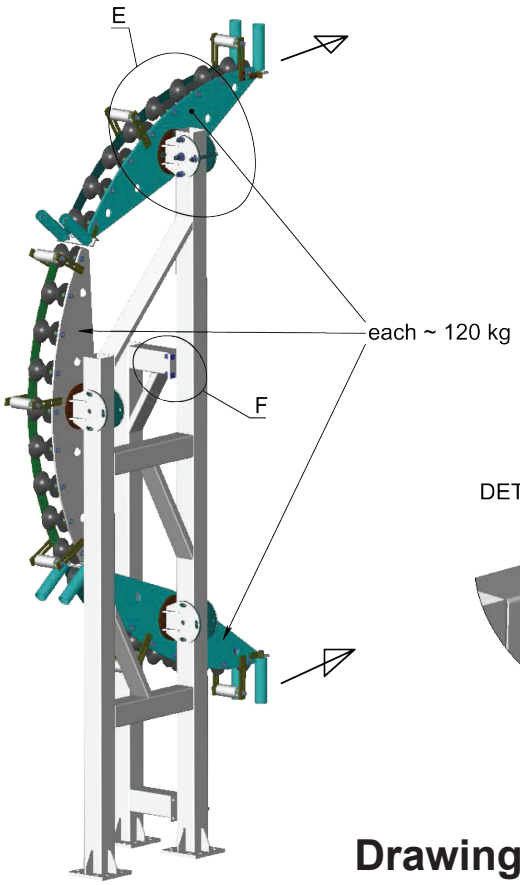

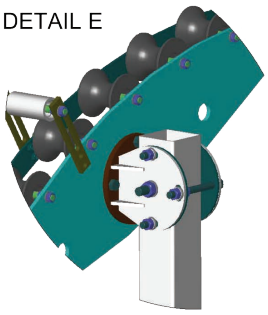

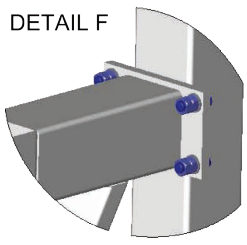

Article: 09610
Weight: 950kg

Drawing No. 3-300108-00

Subec AB **Hesselmans Torg 5** **SE- 131 54 Nacka** **Sweden** **Phone: +46-8-88 46 33** **Email: info@subec.se** **Web: www.subec.se**

Copyright © 2026 Subec

ROLLER ARC

Material: Polished Steel, Hardened Steel, Stainless Steel, PA-6



Article: 01603
Weight: 10,4kg

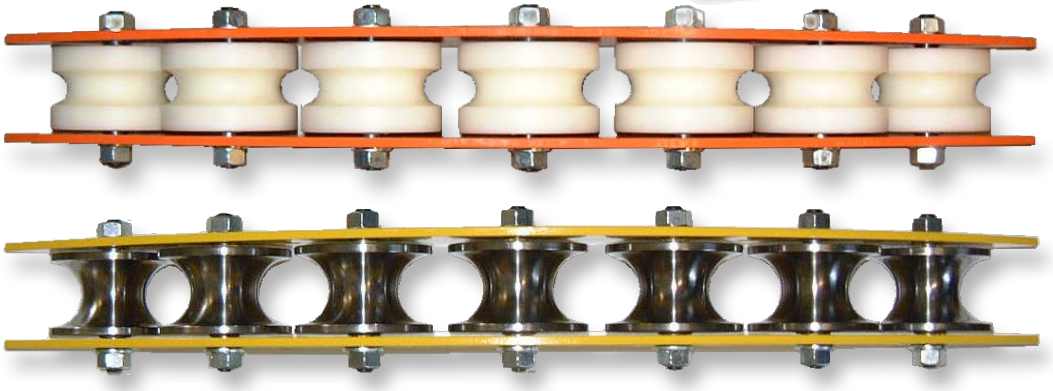

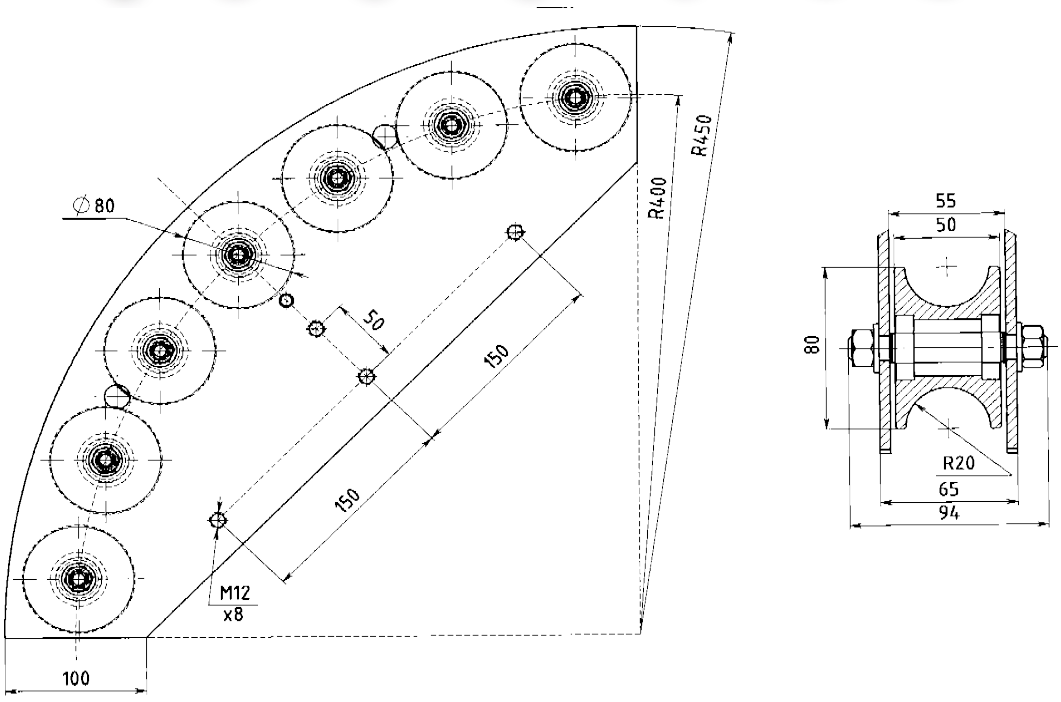

Drawing No. 3-300108-00

Subec AB **Hesselmans Torg 5** **SE- 131 54 Nacka** **Sweden** **Phone: +46-8-88 46 33** **Email: info@subec.se** **Web: www.subec.se**

Copyright © 2026 Subec

ROLLER ARC

Roller Material: Polished Steel, Hardened Steel, Stainless Steel, PA-6

- Roller Arc for improved laying result. -

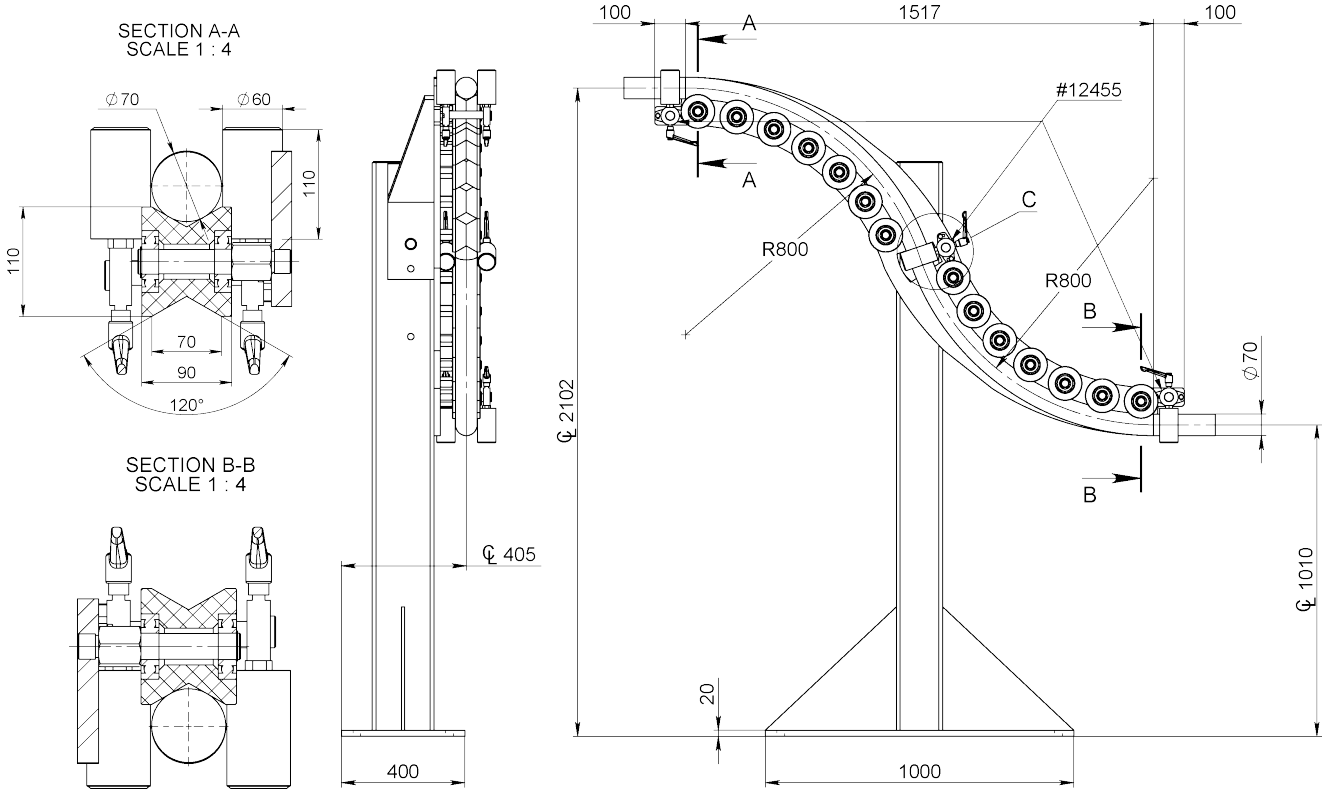

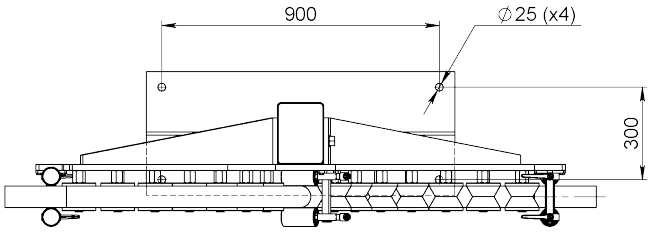

DETAIL C
SCALE 1 : 4

Article: 12321

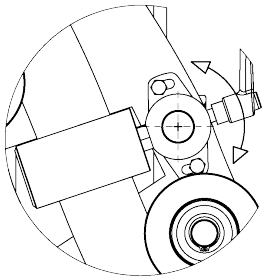

Adj. roller angle

(To match different product sizes)

Drawing No. 3-300108-00

Subec AB **Hesselmans Torg 5** **SE- 131 54 Nacka** **Sweden** **Phone: +46-8-88 46 33** **Email: info@subec.se** **Web: www.subec.se**

Copyright © 2026 Subec

ROLLER ARC

Material: Polished Steel, Hardened Steel, Stainless Steel, PA-6

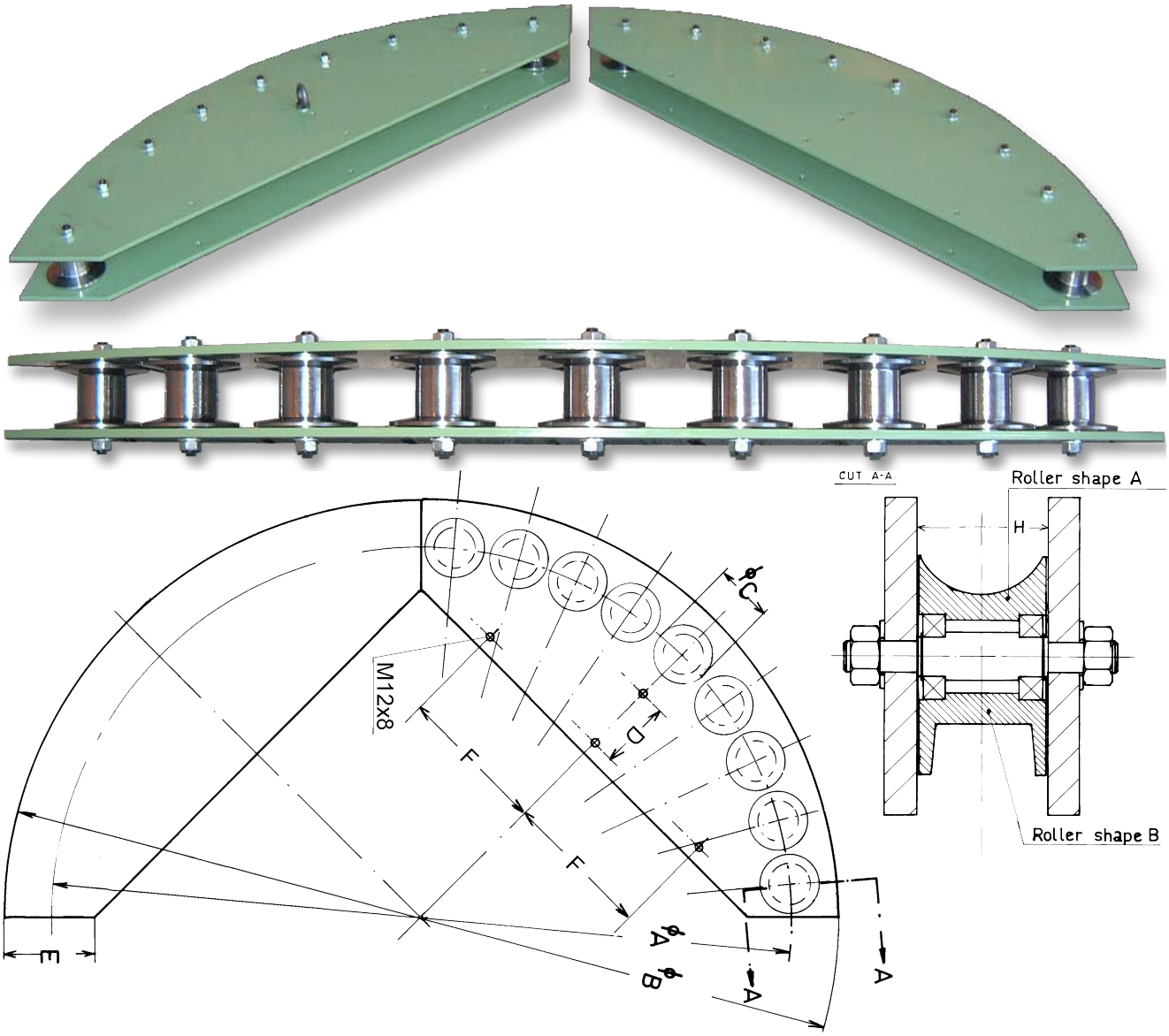

Article	A	B	C	D	E	F	H	Rollers
05450	1000	1100	80					9
05300	1200	1350	100	100		320	86	9
05128	1600	1750	100	100		320	70	12
01182	3200	3360	250					10

Drawing No. 3-300108-00

Subec AB **Hesselmans Torg 5** **SE- 131 54 Nacka** **Sweden** **Phone: +46-8-88 46 33** **Email: info@subec.se** **Web: www.subec.se**

Copyright © 2026 Subec

ROLLER ARC

Material: Polished Steel, Hardened Steel, Stainless Steel, PA-6

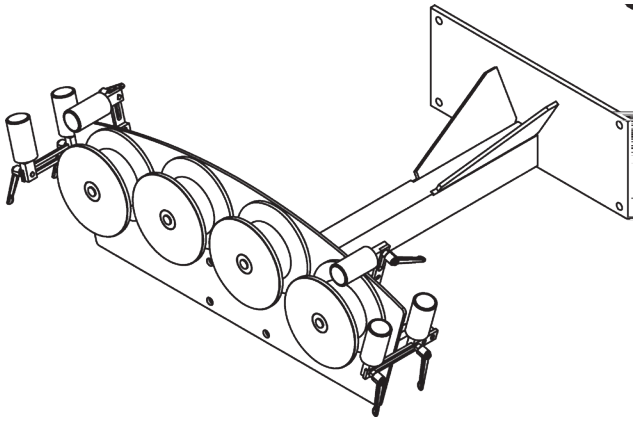

Article: 05050
With Stand

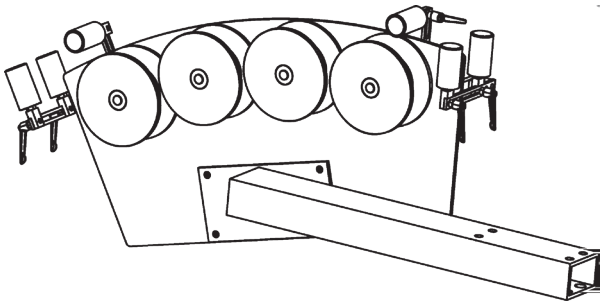

Article: 05052
Side Mounting

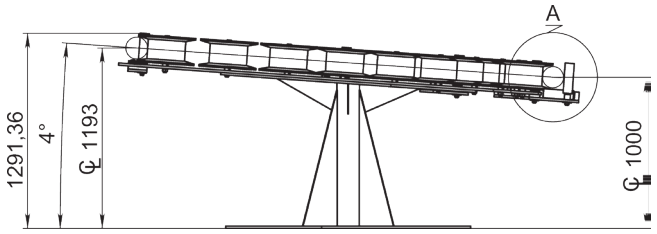



Article: 05203
Custom made

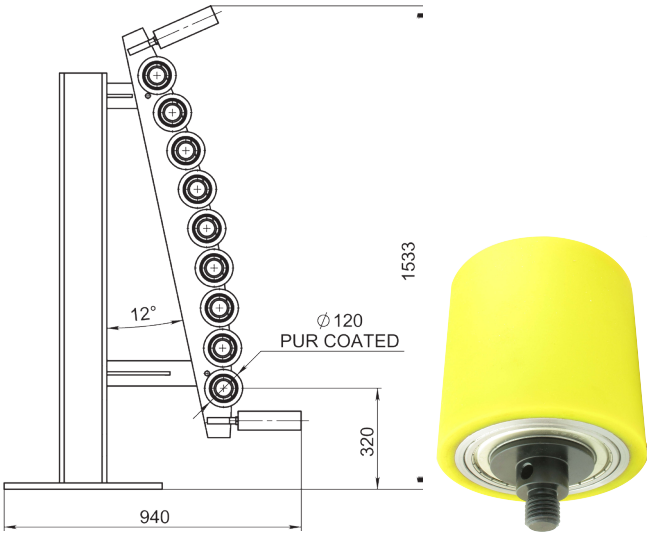

Article: 05206
Vertical mounting with inlet Guide roller.
With roller D120 L120 Article: 08045

More information on request

Drawing No. 3-300108-00

Subec AB **Hesselmans Torg 5** **SE- 131 54 Nacka** **Sweden** **Phone: +46-8-88 46 33** **Email: info@subec.se** **Web: www.subec.se**

Copyright © 2026 Subec

ROLLER ARC

Material: Polished Steel, Hardened Steel, Stainless Steel, PA-6

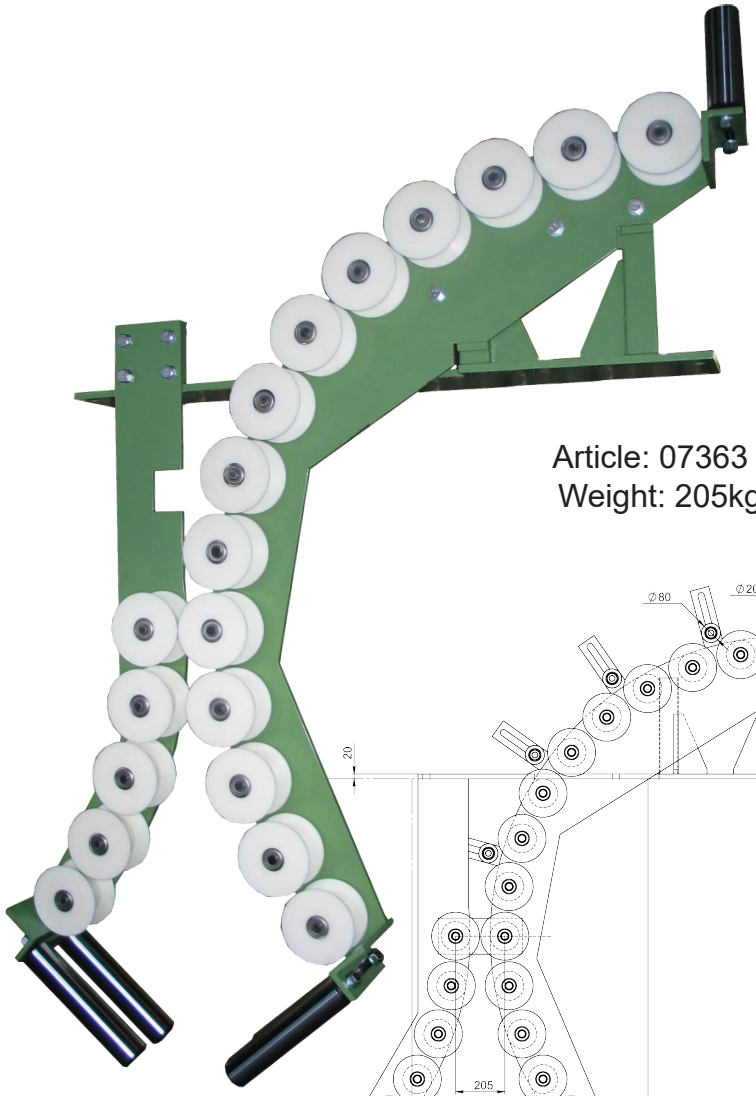

Article: 07363 + 07364
Weight: 205kg + 91kg

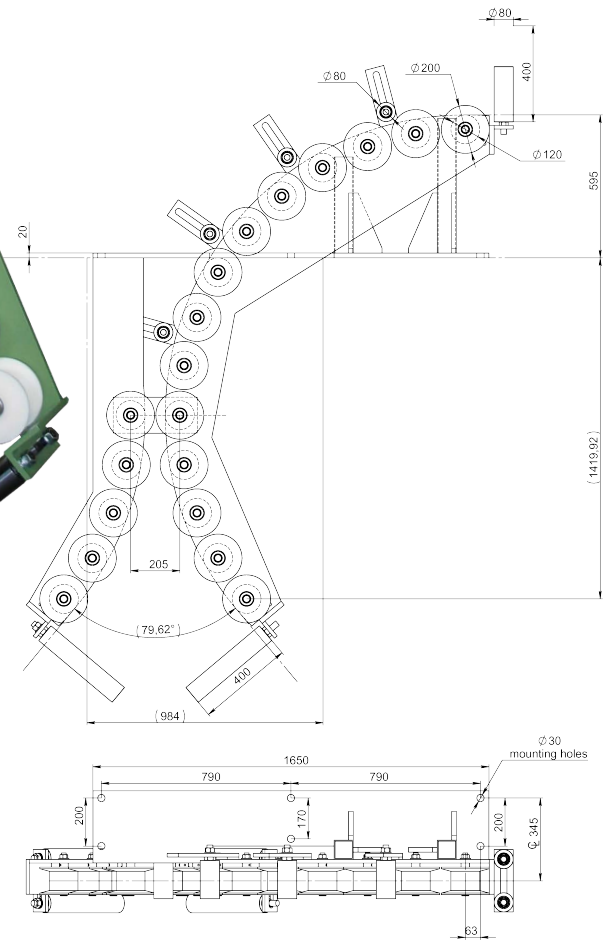

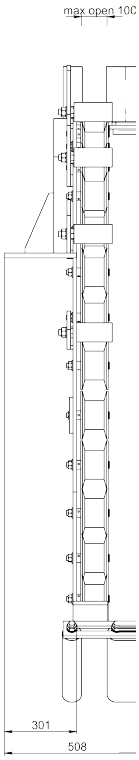

Drawing No. 3-300108-00

Subec AB **Hesselmans Torg 5** **SE- 131 54 Nacka** **Sweden** **Phone: +46-8-88 46 33** **Email: info@subec.se** **Web: www.subec.se**

Copyright © 2026 Subec

ROLLER ARC

Material: Polished Steel, Hardened Steel, Stainless Steel, PA-6

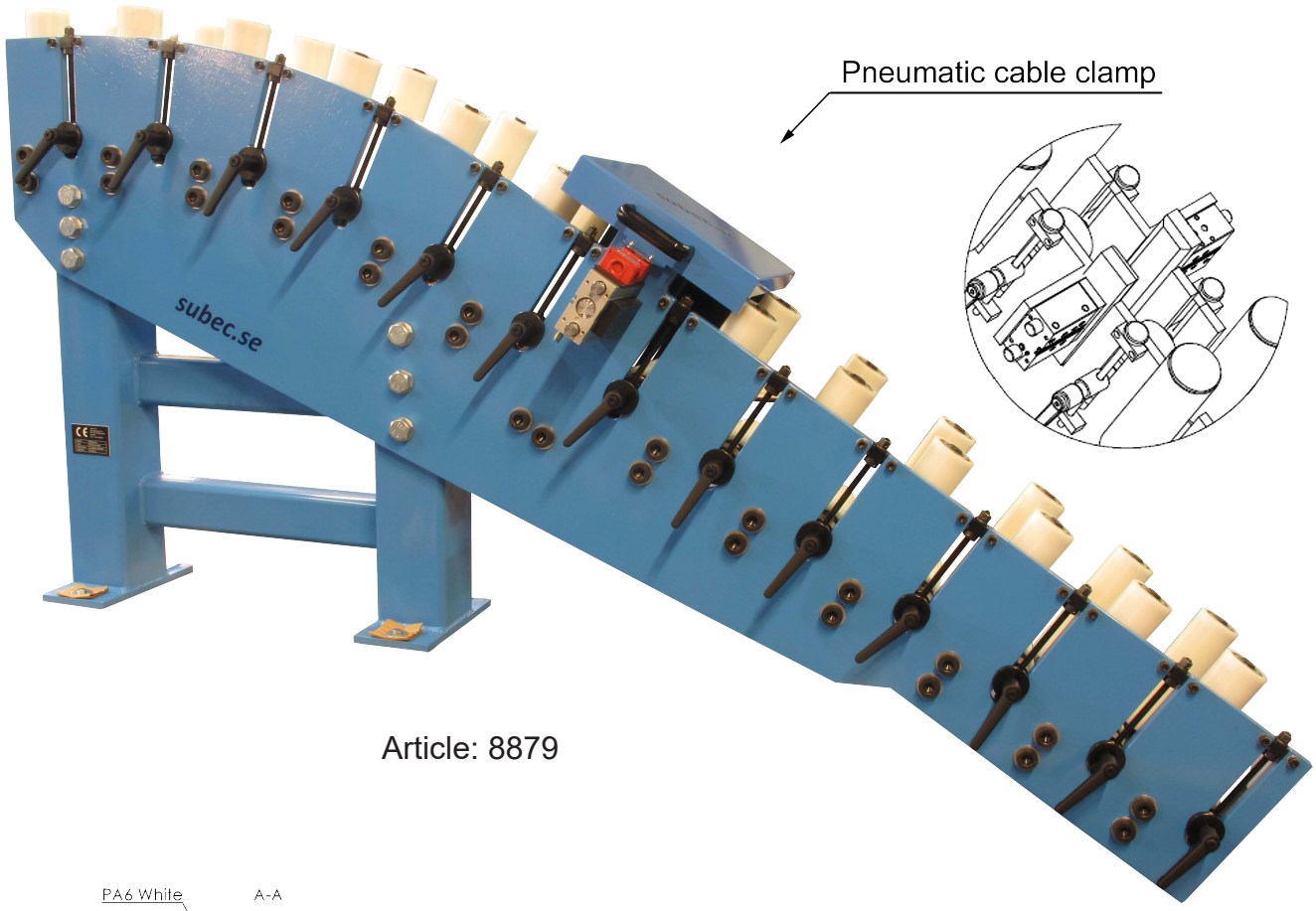

Article: 8879

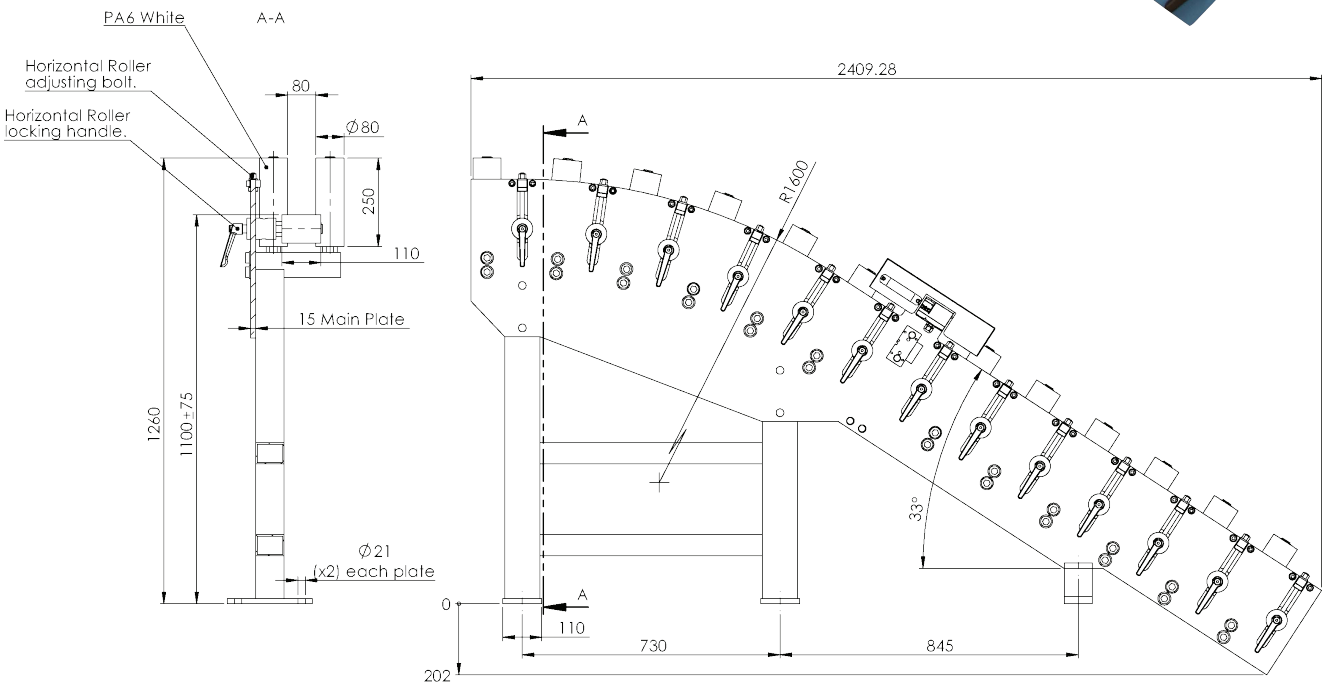

Drawing No.3-400973-00

Subec AB **Hesselmans Torg 5** **SE- 131 54 Nacka** **Sweden** **Phone: +46-8-88 46 33** **Email: info@subec.se** **Web: www.subec.se**

Copyright © 2026 Subec

ROLLERS FOR STRAIGHTENERS, HARDENED

Profile A , B or other upon request

Type A = SS

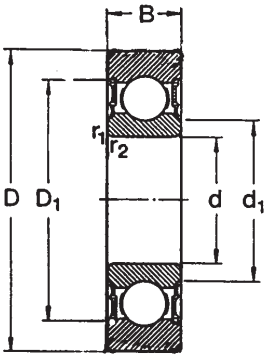

Type B = SD

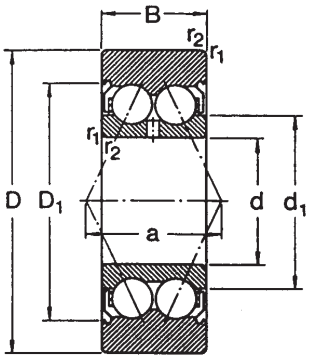

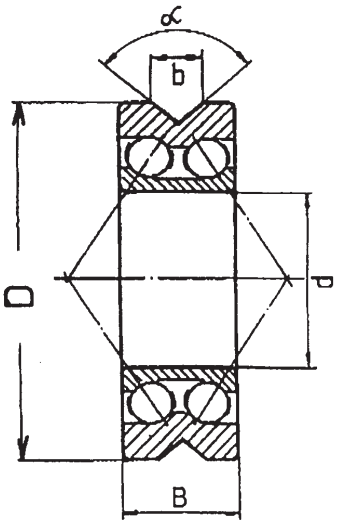

Type B: Double row straightening rollers

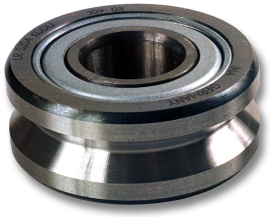





Roller SN32 V-Groove 90° with shaft and nut
Article: 16567

Profile A: V

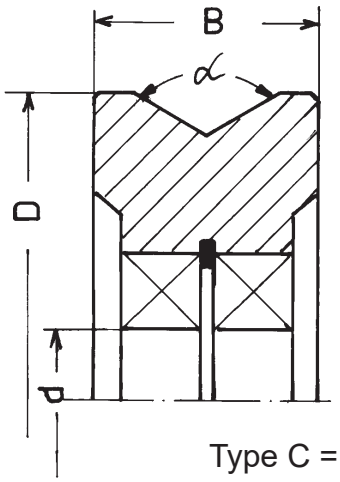

Profile B: Round

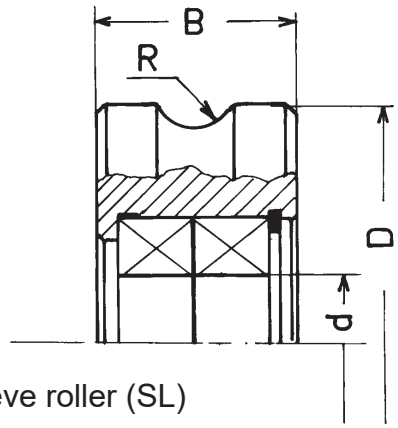

Type C = Sleeve roller (SL)



Heavy duty roller made of hardened steel with built-in bearing

Drawing No. 1-400387-00

Subec AB **Hesselmans Torg 5** **SE- 131 54 Nacka** **Sweden** **Phone: +46-8-88 46 33** **Email: info@subec.se** **Web: www.subec.se**

Copyright © 2026 Subec

SINGLE ROW STRAIGHTENING ROLLER, SEALED

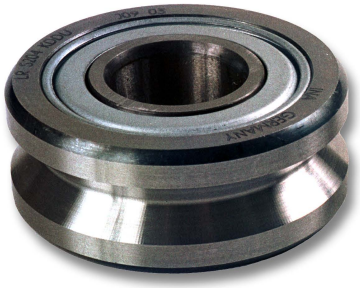

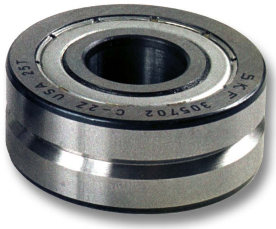

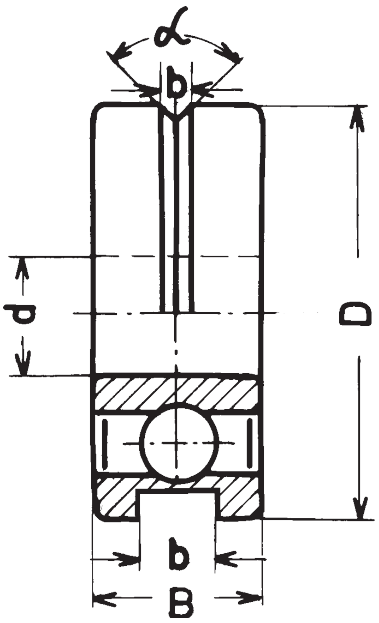

Article	Name	ØD	Ød	B	b	α°	Product Ø
01369*	SS7	7	3	3	0,5	90	-0,2
01279	SS10	10	3	4	0,6	90	-0,4
01281*	SS13	13	4	5	0,8	90	0,2 - 0,6
01729	SS16	16	4	5	1,0	90	0,5 - 0,9
01728*	SS17	17	4	5	1,5	90	0,5 - 1,3
02747*	SS19	19	6	6	2,0	90	0,7 - 1,5
01727*	SS21	21	6	6	2,4	90	0,7 - 2,0
01280*	SS22	22	8	7	1,7	90	0,8 - 1,6
06771*	SS23	23	8	7	1,7	90	0,8 - 1,6
07805*	SS26	26	8	7	3,3	90	0,8 - 3,0
07806*	SS30	30	10	8	3,3	90	0,8 - 3,2
01725*	SS32	32	10	9	4,4	90	1,2 -4,3
01724*	SS35	35	12	10	4,7	90	1,9 - 4,6
10211*	SS35	35	10	9	4,5	90	1,9 - 4,4
01723*	SS40	40	15	11	5,2	90	3,0 - 5,0
03805*	SS47	47	15	11	7,0	0	-6,8
01722*	SS47	47	17	12	7,3	90	4,0 - 7,2
01721*	SS52	52	20	14	8,5	100	6,0 - 8,4
01720*	SS62	62	25	15	10,1	100	6,5 - 10,0
01719	SS72	72	30	16	11,1	100	7,0 - 11,0
01718	SS80	80	35	17	15,1	100	7,5 - 15,0

Drawing No. 3-400486-00

* Stock item

Subec AB Hesselmans Torg 5 SE- 131 54 Nacka Sweden
Phone: +46-8-88 46 33
Email: info@subec.se
Web: www.subec.se

Copyright © 2026 Subec

DOUBLE ROW STRAIGHTENING ROLLER, SEALED

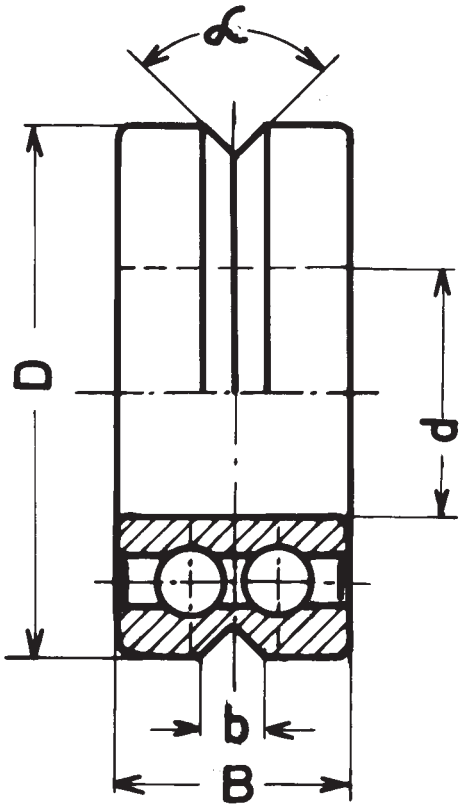



Article	Name	ØD	Ød	B	b	α°	Product Ø	Remark
01712*	SD30	30	10	14	3,2	90	1,5 - 3,0	
06442*	SD30	30	10	14	5,8	120	1,5 - 5,5	
01713*	SD31	31	10	14	3,2	90	1,5 - 3,0	
01339*	SD32	32	10	14	4,2	90	1,5 - 4,0	
01714*	SD35	35	12	15,9	4,7	90	2,0 - 4,5	
00567*	SD40	40	15	15,9	5,0	90	3,0 - 5,0	
05898	SD40	40	15	15,9	6,0	100	3,0 - 5,8	
08845*	SD40	40	15	15,9	10	110	3,0 - 10,0	
06944*	SD45	45	12	22	10,5	110	3,0 - 8,0	
05401*	SD52	52	17	22	10,0	90	7,0 - 10,0	Rubber seal
01715*	SD52	52	20	20,6	9,4	90	6,0 - 9,5	
05012*	SD52	52	20	20,6	11,5	100	6,0 - 9,5	V+R4,5
01315*	SD62	62	25	20,6	13,0	100	6,0 - 10,5	
01716	SD72	72	30	23,8	12,0	100	7,0 - 12,0	
01717*	SD80	80	35	27	13,0	100	7,0 - 15,0	
08176	SD80	80	35	27	22,0	115	7,0 - 16,0	V+R5

Drawing No. 3-400475-00

* Stock item

Subec AB
Hesselmans Torg 5
SE- 131 54 Nacka
Sweden
Phone: +46-8-88 46 33
Email: info@subec.se
Web: www.subec.se

Copyright © 2026 Subec

SECTOR ROLLERS

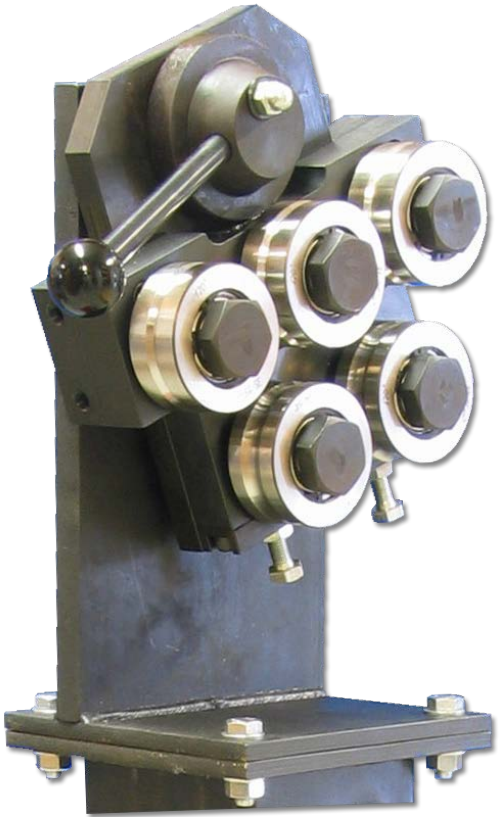



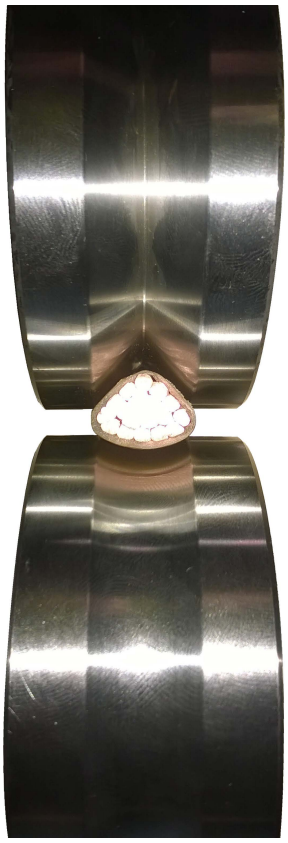

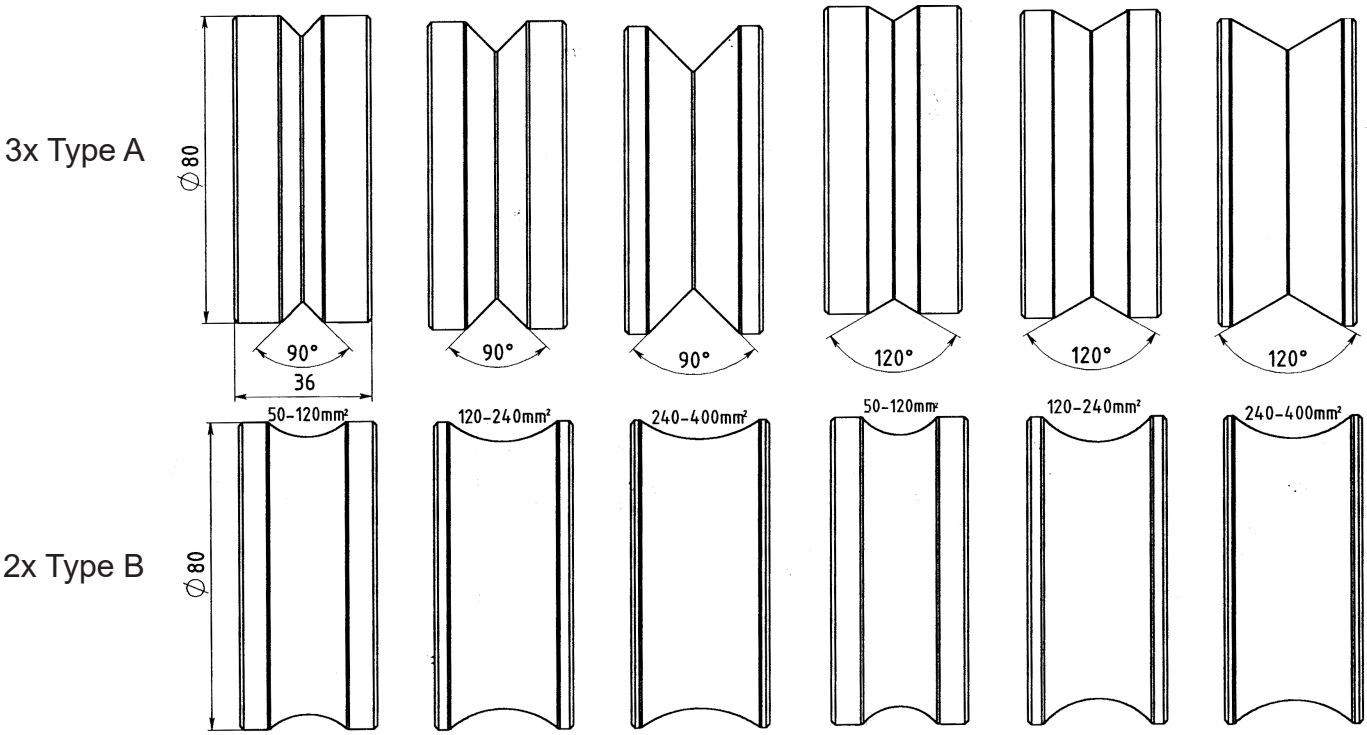

SL80 Sector rollers

Drawing No. 3-400422-00

Subec AB **Hesselmans Torg 5** **SE- 131 54 Nacka** **Sweden** **Phone: +46-8-88 46 33** **Email: info@subec.se** **Web: www.subec.se**

Copyright © 2026 Subec

SLEEVE ROLLERS

Groove V

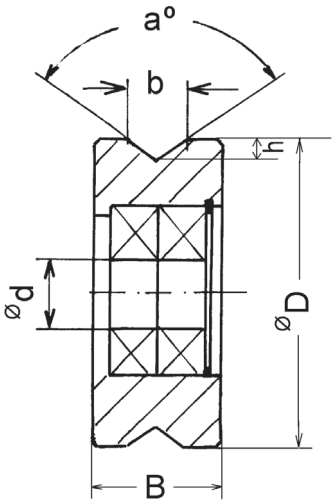

V-Groove, example dimensions in table, other on request

Groove R

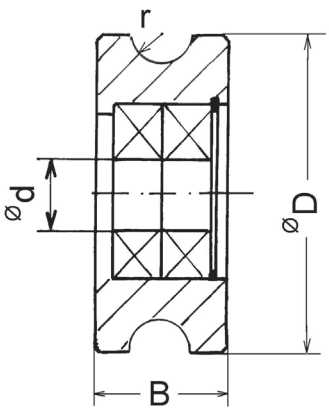

Round groove
Radius to be specified



Article: 5388



Article: 4325

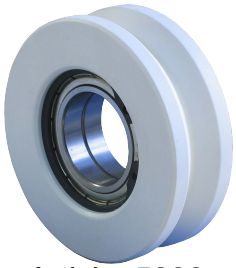

Article: 5888

Plastic executions are also available

Article	Type	ØD	Ød	B	b	h	r	α°	Product Ø	Bearing	Groove
03414	SL 32	32	10	22	4,2	2,1	-	90	1,5-4,0	6000-2Z	V
02406*	SL 35	35	12	22	4,7	2,35	-	90	2,0-4,5	6001-2Z	V
01320*	SL 45	45	12	22	10,5	3,7	-	110	5,0-7,0	6001-2Z	V
06146A	SL 52	52	20	24	10,5	3,7	-	110	5,0-9,0	61804-2Z	V
13146*	SL 52	52	15	24	17	7,1	-	110	5-15,5	6002-2Z	V
02032	SL 74	74	25	35	12	5	-	100	7,0-12,0	6005-2Z	V
02161	SL 80	80	25	30	22	9,2	-	100	7,0-21,0	6005-2Z	V
02748	SL 100	100	30	40	23	9,6	-	100	15,0-30,0	6006-2Z	V
05737	SL 110	110	30	38	24	10	-	100	9,0-23,0	6006-2Z	V
05319A*	SL 125	125	30	38	30	12,6	-	100	15,0-28,0	6006-2Z	V
07046	SL 150	150	40	80	47	19,7	-	100	15,0-45,0	6308-2Z	V
07047	SL 240	240	45	100	80	33,6	-	100	20,0-50,0	6309-2Z	V

More information on request

* Stock item

Subec AB **Hesselmans Torg 5** **SE- 131 54 Nacka** **Sweden** **Phone: +46-8-88 46 33** **Email: info@subec.se** **Web: www.subec.se**

Copyright © 2026 Subec

SLEEVE ROLLERS

Groove V

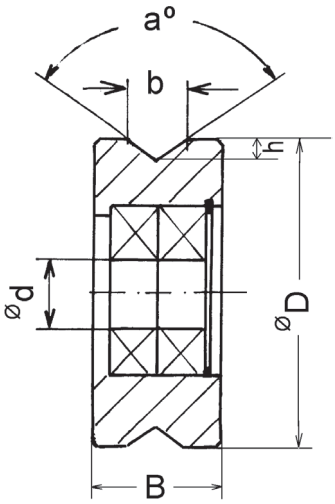

V-Groove, example dimensions
in table, other on request

Groove R

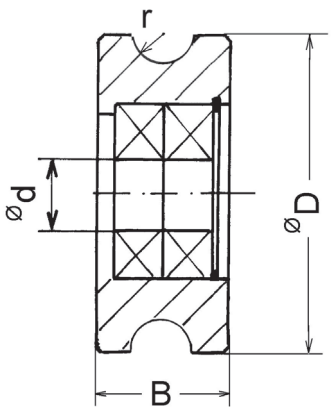

Round groove
Radius to be specified



Article: 10778B



Article: 11990

Article	Type	ØD	Ød	B	b	h	r	α°	Product Ø	Bearing	Spec	Groove
05148*	SL 20	20	6,3	25	25	5	-	136	9,0-23,0	61804-2Z	95 Al_2O_3	V
10778B*	SL 35	35	8	20	12,4	6	-	90	7,0-12,0	628/8-2Z	ZrO_2	V
10220*	SL 40	40	12	22	5,4	2,5	-	94	2,0-5,0	6001-2Z	ZrO_2	V
11976*	SL 40	40	21	18	4	2	2	-	3,0-4,0	61901-2RZ 61802-2 RZ	ZrO_2	R
12000*	SL 40	40	21	18	8	6,17	4	-	7,0-8,0	61901-2RZ 61802-2 RZ	ZrO_2	R
11837*	SL 50	50	9	24	20	10	-	90	7,0-19,0	619/9 2Z	ZrO_2	V
11990	SL 100	100	28	20	20	8,3	-	90	5,0-20,0	-	99,5 Al_2O_3	V

More information on request

* Stock item

Subec AB **Hesselmans Torg 5** **SE- 131 54 Nacka** **Sweden** **Phone: +46-8-88 46 33** **Email: info@subec.se** **Web: www.subec.se**

Copyright © 2026 Subec

STRAIGHTENER ORIENTATION

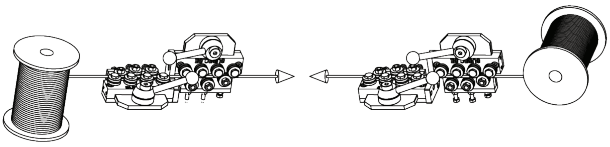

Orientation #1

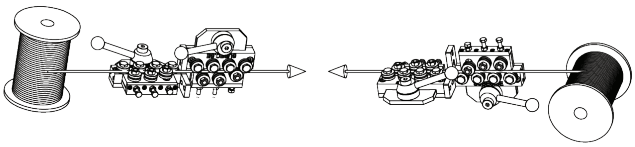

Orientation #5

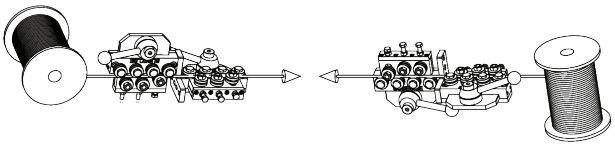

Orientation #2

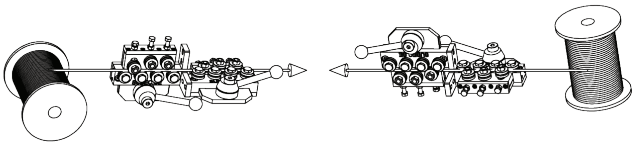

Orientation #6

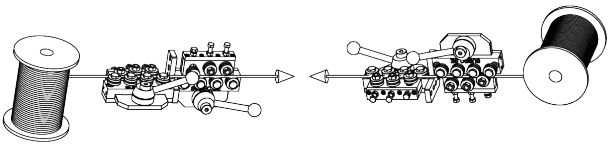

Orientation #3

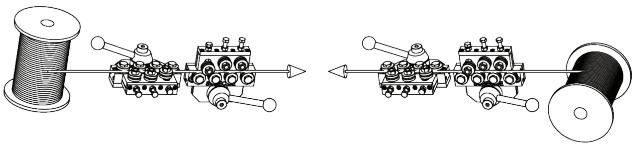

Orientation #7

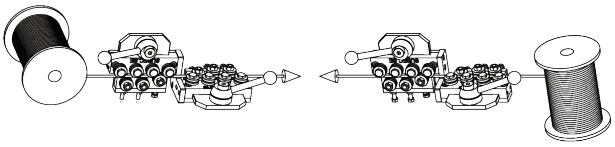

Orientation #4

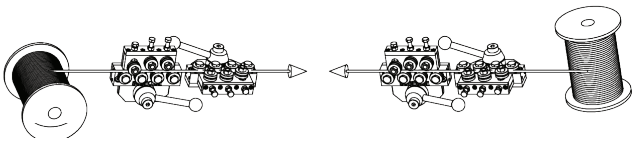

Orientation #8

Orientations #7 and #8 require a special connector

Subec AB **Hesselmans Torg 5** **SE- 131 54 Nacka** **Sweden** **Phone: +46-8-88 46 33** **Email: info@subec.se** **Web: www.subec.se**

Copyright © 2026 Subec

POSITION INDICATOR ORIENTATION

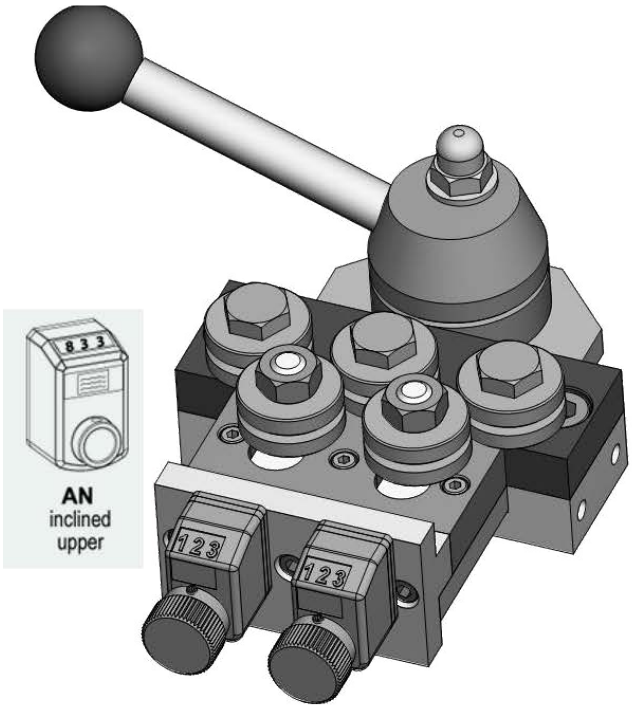

Article: AN

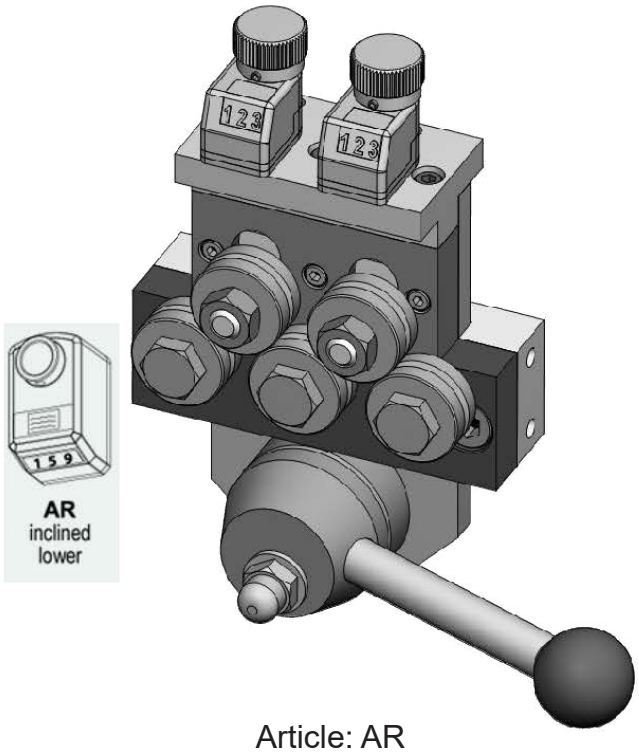

Article: AR

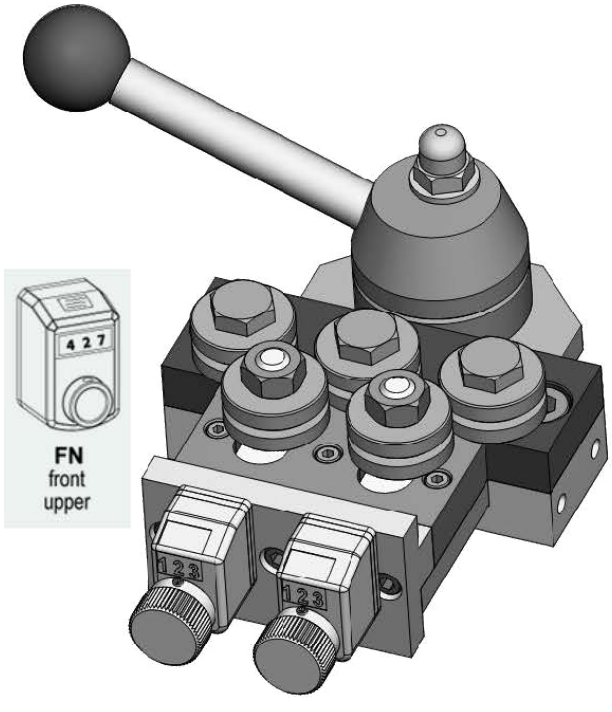

Article: FN

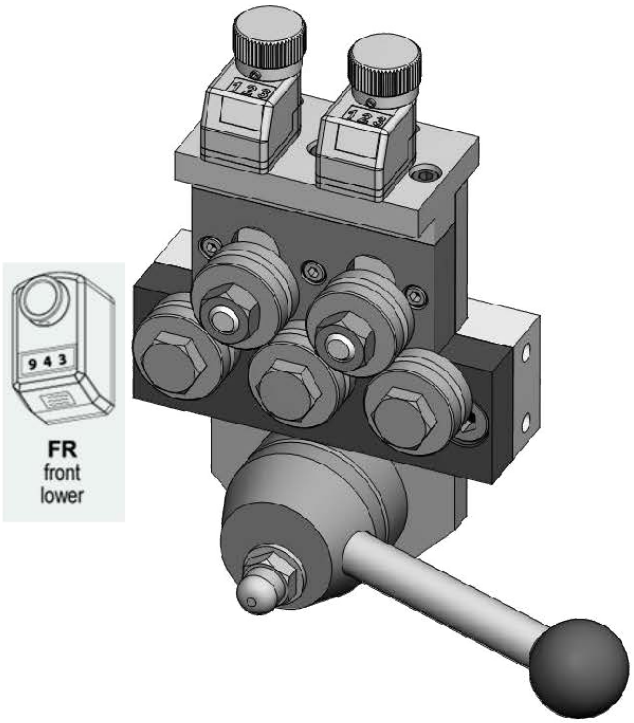

Article: FR

Subec AB **Hesselmans Torg 5** **SE- 131 54 Nacka** **Sweden** **Phone: +46-8-88 46 33** **Email: info@subec.se** **Web: www.subec.se**

Copyright © 2026 Subec

CUSTOMIZED WIRE STRAIGHTENERS

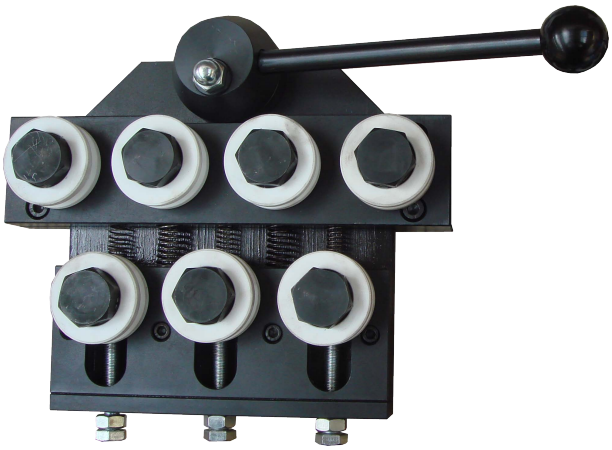

Article: 06127
S52-Q7
With PET rollers



Article: 03692
Weight: 5,6kg
S30-Q9
Stainless Steel



Article: 08844
S40-Q-5
With 4 stacked rollers

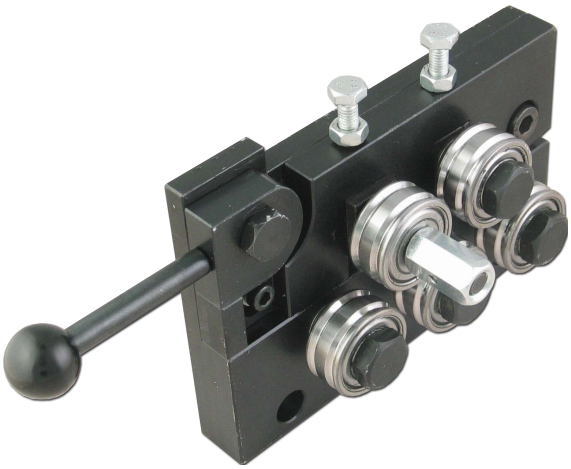

Article: 05515
S30-XSL Slimline
Helix roller

More information on request

Subec AB **Hesselmans Torg 5** **SE- 131 54 Nacka** **Sweden** **Phone: +46-8-88 46 33** **Email: info@subec.se** **Web: www.subec.se**

Copyright © 2026 Subec

CUSTOMIZED WIRE STRAIGHTENERS



Article: 06014
S-40-Q-5
Position Indicator



Article: 05192
S35-Q7
With hydraulic open/close



Article: 05533
S40-SY-7
Removable handwheel
position indicator

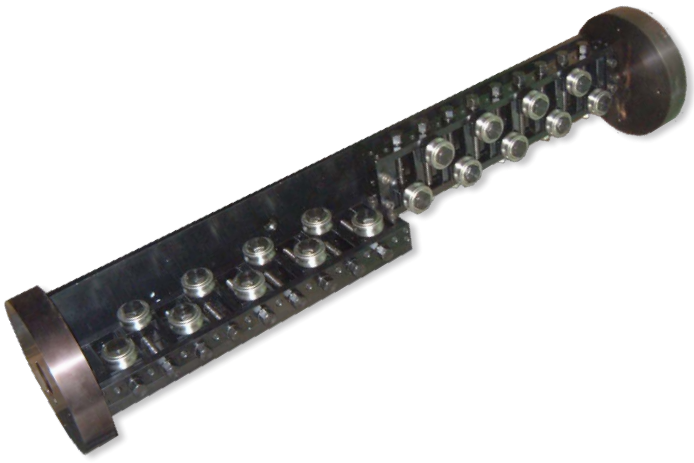

Article: 01706
Weight:102kg
S52-AA-9 double
rotating

More information on request

Subec AB **Hesselmans Torg 5** **SE- 131 54 Nacka** **Sweden** **Phone: +46-8-88 46 33** **Email: info@subec.se** **Web: www.subec.se**

Copyright © 2026 Subec

CUSTOMIZED WIRE STRAIGHTENERS



Article: 08088
S-80-Q-5
With Zirconium Rollers

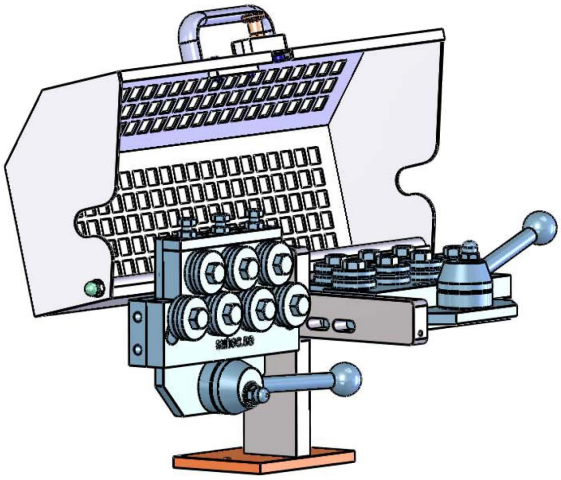

Safety cover for S40-Q-7

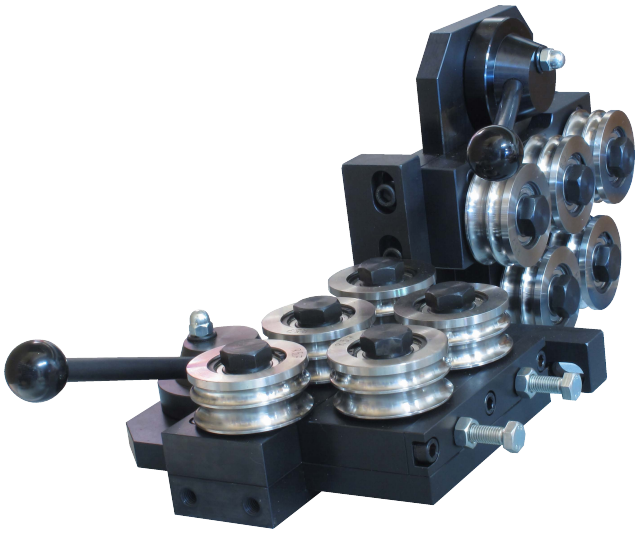

Multi-groove rollers (Article: 8187)
Wire Straightener S80-Q-5 (Article: 01013)

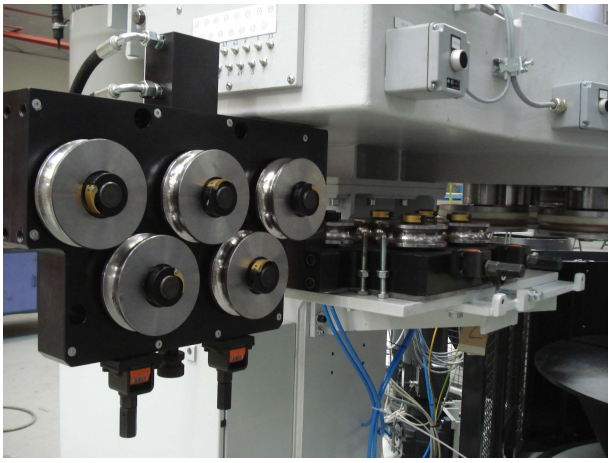

Article: 07697
S130-SY-5 Double Weight:150kg
Heavy duty unit with hydraulic and symmetric open/close

More information on request

Subec AB **Hesselmans Torg 5** **SE- 131 54 Nacka** **Sweden** **Phone: +46-8-88 46 33** **Email: info@subec.se** **Web: www.subec.se**

Copyright © 2026 Subec

CUSTOMIZED WIRE STRAIGHTENERS

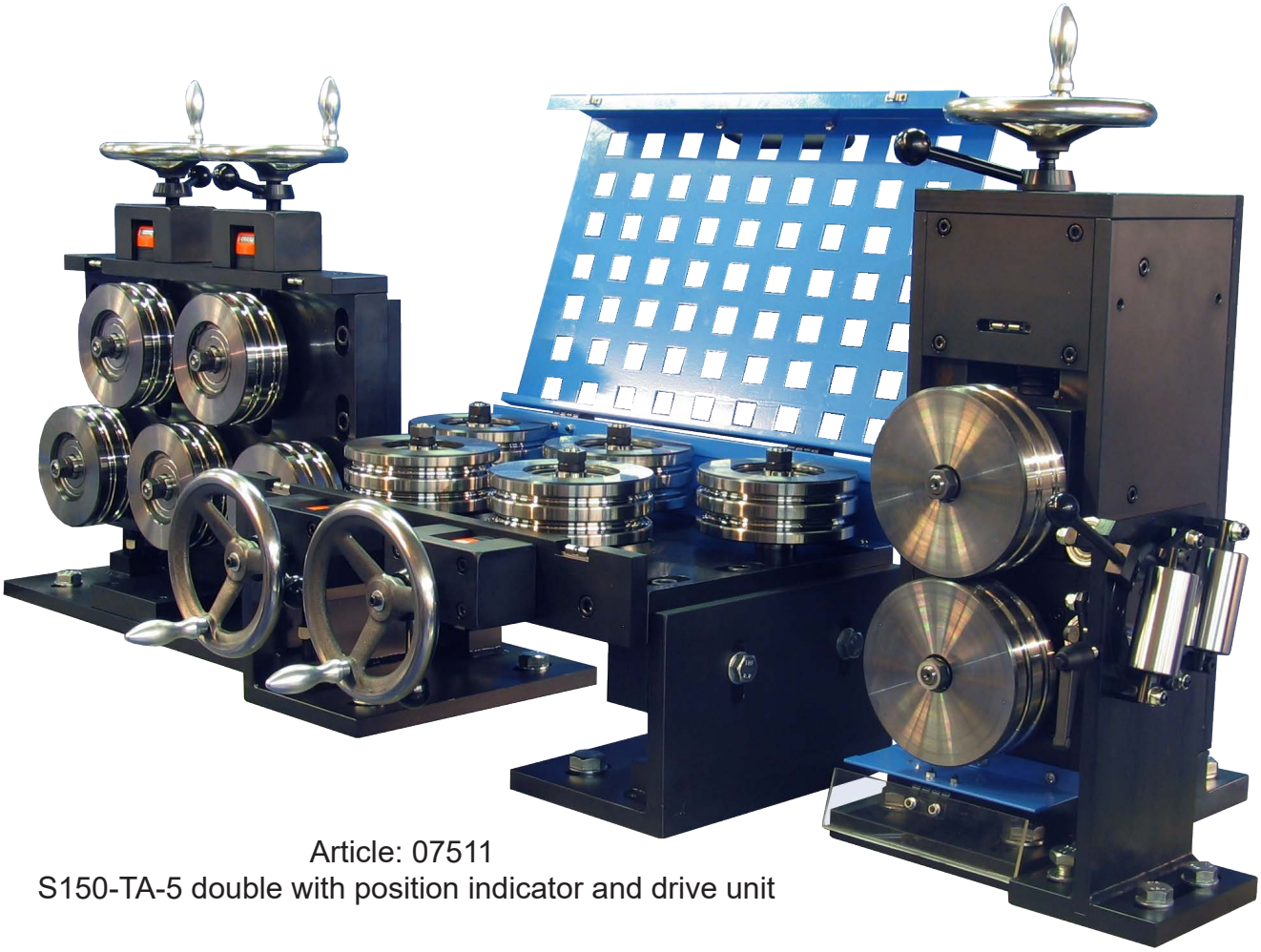

Article: 07511
S150-TA-5 double with position indicator and drive unit



Inlet
for Article: 07511

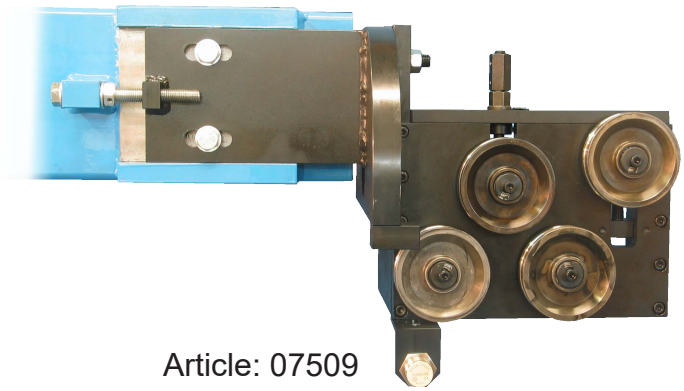

Article: 07509
S106-TA-4 Outlet with Sensor
for article 7511

More Information on request

Subec AB **Hesselmans Torg 5** **SE- 131 54 Nacka** **Sweden** **Phone: +46-8-88 46 33** **Email: info@subec.se** **Web: www.subec.se**

Copyright © 2026 Subec

CUSTOMIZED WIRE STRAIGHTENERS

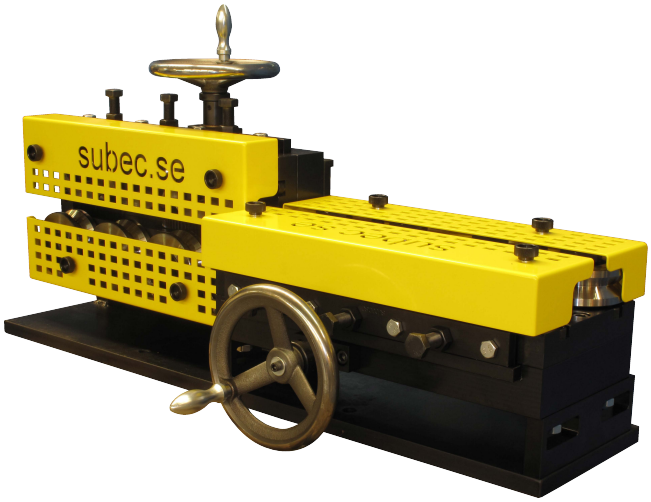

Article: 01669
S100-SY-7
Double system with safety cover



Article: 09929
S35-XSL-6+1+1
Customized straightener for assembly on rotating machine



Article: 05086
S200-AA-5
Two positions stand with two double rotating straighteners



Article: 02137
S80-Q-5
Rotating wire straightener with height adjustable stand

More information on request

Subec AB **Hesselmans Torg 5** **SE- 131 54 Nacka** **Sweden** **Phone: +46-8-88 46 33** **Email: info@subec.se** **Web: www.subec.se**

Copyright © 2026 Subec

CUSTOMIZED WIRE STRAIGHTENERS

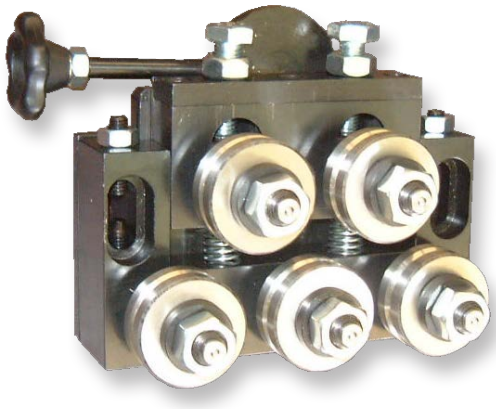

Article: 01916
S40-Q-5
For assembly on a rotating machine

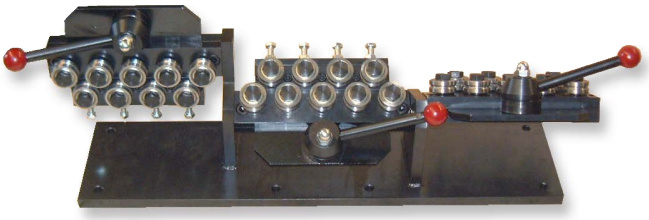

Article: 01705
S35-Q-9-120°



Article: 09982 & 09884
S22-Q-5 & S35-Q-5
Vibration proof design



Article: 11716
“Gatling Wire Straightener”
+6st S52-Q-AA-7 Article: 11710

More information on request

Subec AB **Hesselmans Torg 5** **SE- 131 54 Nacka** **Sweden** **Phone: +46-8-88 46 33** **Email: info@subec.se** **Web: www.subec.se**

Copyright © 2026 Subec

CUSTOMIZED WIRE STRAIGHTENERS

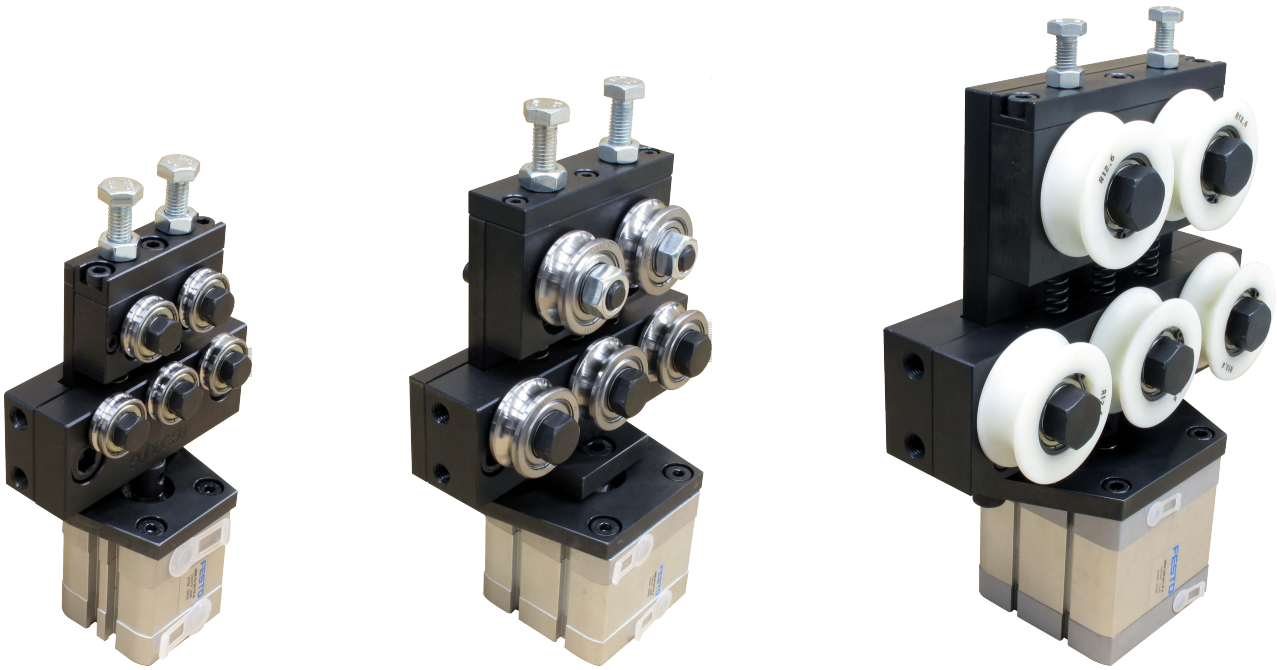

S22-, S40-, S80-Quick
With pneumatic open/close
Article (Left-Right):
12398, 12399, 12400

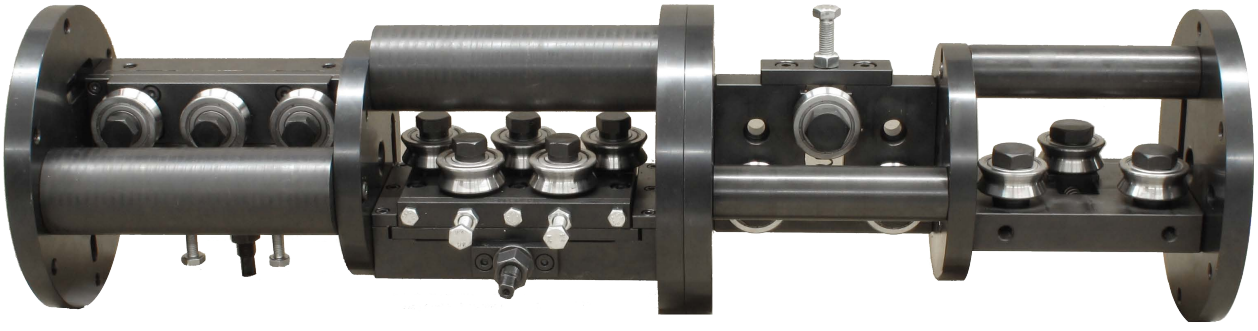

Rotating Wire Straightener
Wire Straightener S52-TA-3 Double . Article: 13336
+
Wire Straightener S52-SY-5 Double. Article: 9613A

More information on request

Subec AB **Hesselmans Torg 5** **SE- 131 54 Nacka** **Sweden** **Phone: +46-8-88 46 33** **Email: info@subec.se** **Web: www.subec.se**

Copyright © 2026 Subec

CUSTOMIZED WIRE STRAIGHTENERS



Article: 10236
Double S80-Q-5 wire straightener with position indicators on height adjustable stand



Article: 14122
Wire straightener with guiding plates to facilitate threading



Article: 19137
3-axis straightening for enhanced control over material reshaping.



Article: 13089
Wire straighteners mounted on table for parallel operation

Subec AB **Hesselmans Torg 5** **SE- 131 54 Nacka** **Sweden** **Phone: +46-8-88 46 33** **Email: info@subec.se** **Web: www.subec.se**

Copyright © 2026 Subec

WIRE STRAIGHTENER S7-AA-HP-7

Product range: Ø -0,2mm



AA = All rollers individually adjustable
HP = “High Precision“

Article: 01372*
Weight: 1,56kg

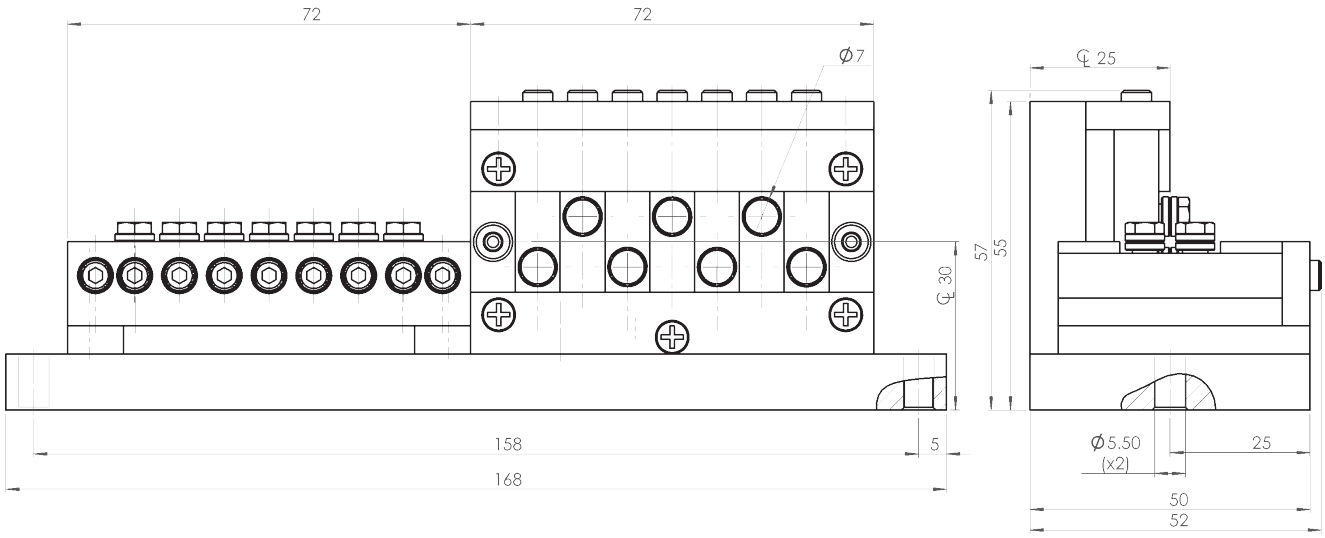

Drawing No. 3-400473-00

* Stock item

Subec AB **Hesselmans Torg 5** **SE- 131 54 Nacka** **Sweden** **Phone: +46-8-88 46 33** **Email: info@subec.se** **Web: www.subec.se**

Copyright © 2026 Subec

WIRE STRAIGHTENER S7-AA-HP-13

Product range: Ø -0,2mm

AA = All rollers individually adjustable
HP = “High Precision“

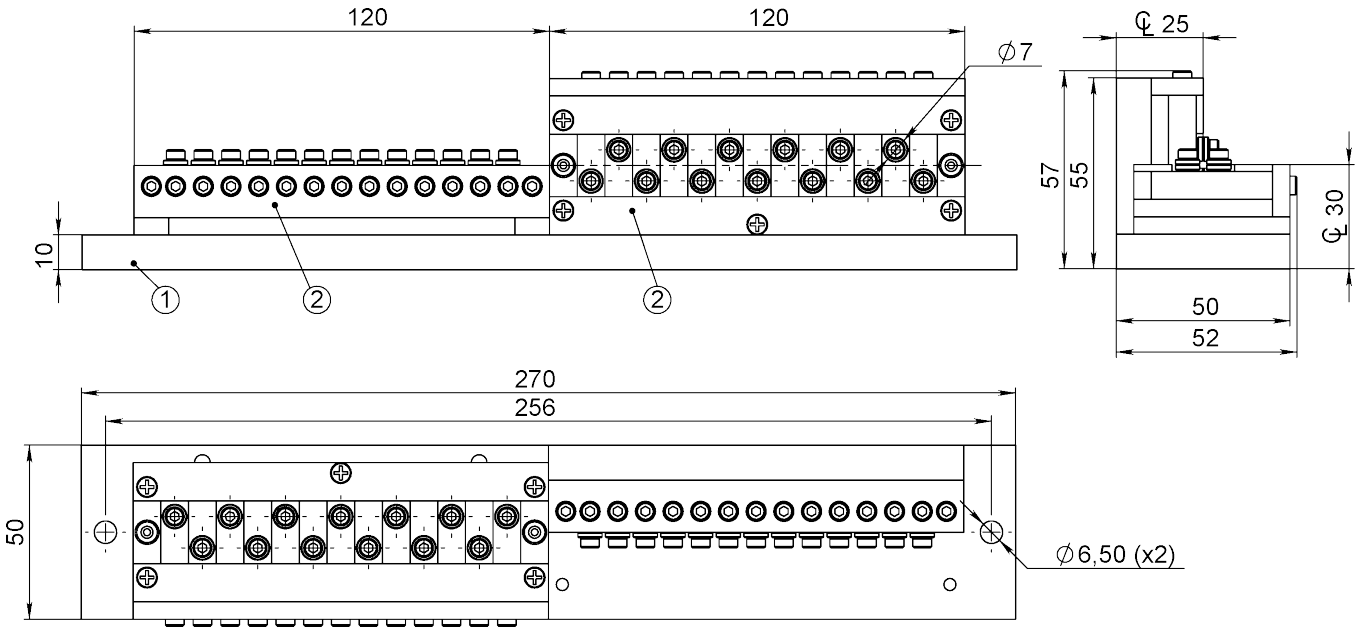



Article: 06240*
Weight: 2,55kg

Drawing No. 3-400473-00

* Stock item

Subec AB **Hesselmans Torg 5** **SE- 131 54 Nacka** **Sweden** **Phone: +46-8-88 46 33** **Email: info@subec.se** **Web: www.subec.se**

Copyright © 2026 Subec

WIRE STRAIGHTENER S10-Q

Product range: Ø -0,4mm

Q = Quick closing by excenter

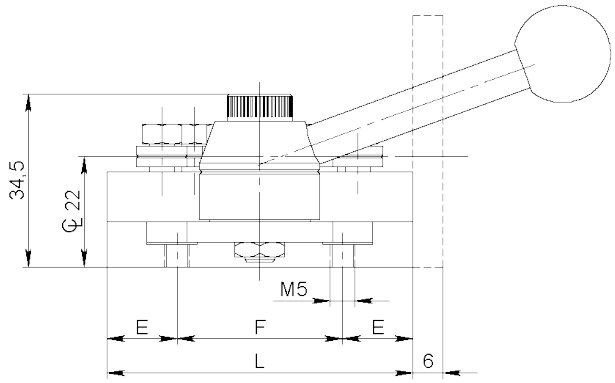

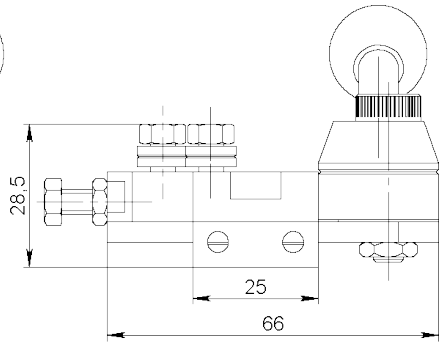

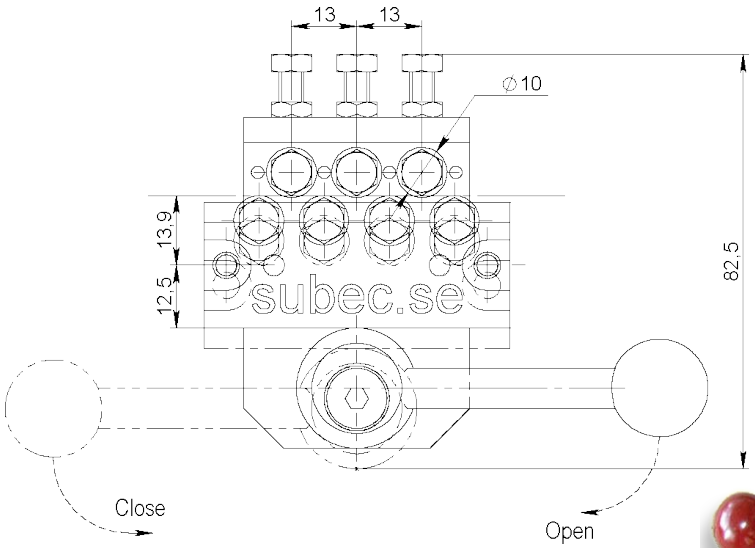

Double System:

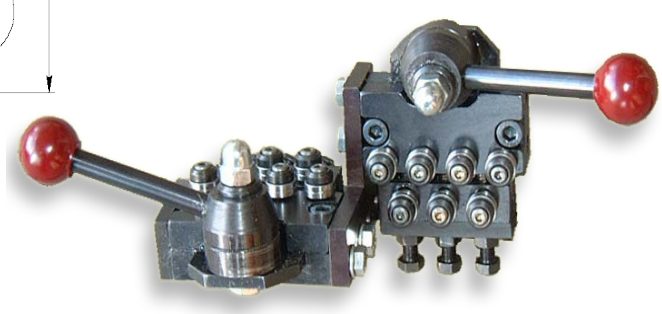

With SS10 Straightening rollers (3-400486-00)
Standard: V-groove, other profiles acc. your specifications

Type	Q5	Q7	Q9	Q11	Q13
L	46	61	76	86	101
E	13	14	15	13,5	14,5
F	20	33	46	59	72
kg					
Article Single		**01239**			**08264**
Article Double		**01168**			**08642**

Drawing No. 3-400460-01

Subec AB **Hesselmans Torg 5** **SE- 131 54 Nacka** **Sweden** **Phone: +46-8-88 46 33** **Email: info@subec.se** **Web: www.subec.se**

Copyright © 2026 Subec

WIRE STRAIGHTENER SERIES S13-Q

Product range: Ø 0,2-0,6mm

Q = Quick closing by excenter

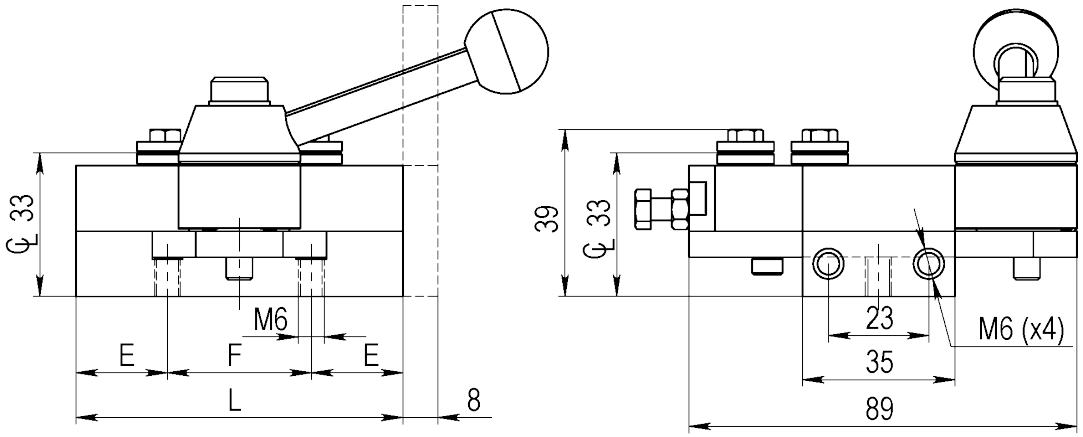

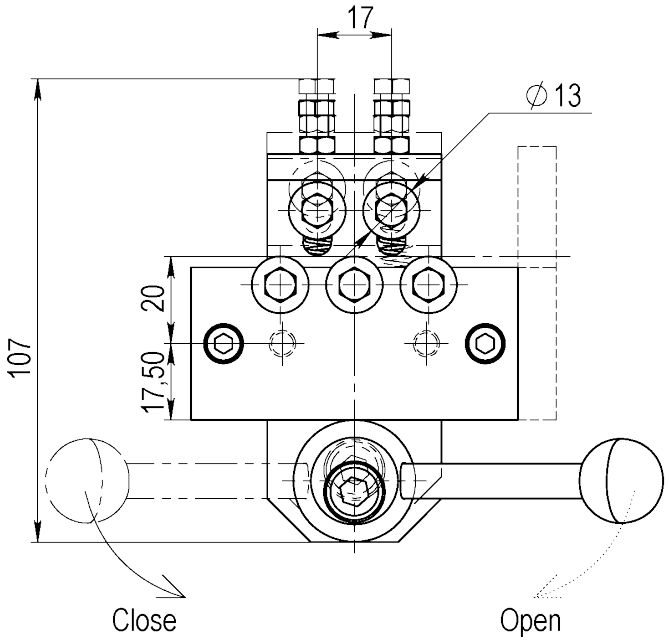



Option: With position indicators
Article: 15472

With SS13 Straightening rollers (3-400486-00)
Standard: V-groove, other profiles acc. your specifications

Type	Q5	Q7	Q9	Q11	Q13
L	75	90	107		
E	21	20	28,5		
F	33	50	50		
kg	2	2,5	3		
Article Single	**01031***	**04808***	**05561**		
Article Double	**01033**	**01574***	**05154**		

Drawing No. 3-400751-00

Subec AB **Hesselmans Torg 5** **SE- 131 54 Nacka** **Sweden** **Phone: +46-8-88 46 33** **Email: info@subec.se** **Web: www.subec.se**

Copyright © 2026 Subec

WIRE STRAIGHTENER SERIES S13-AA

Product range: Ø 0,2-0,6mm

AA = All rollers individually adjustable

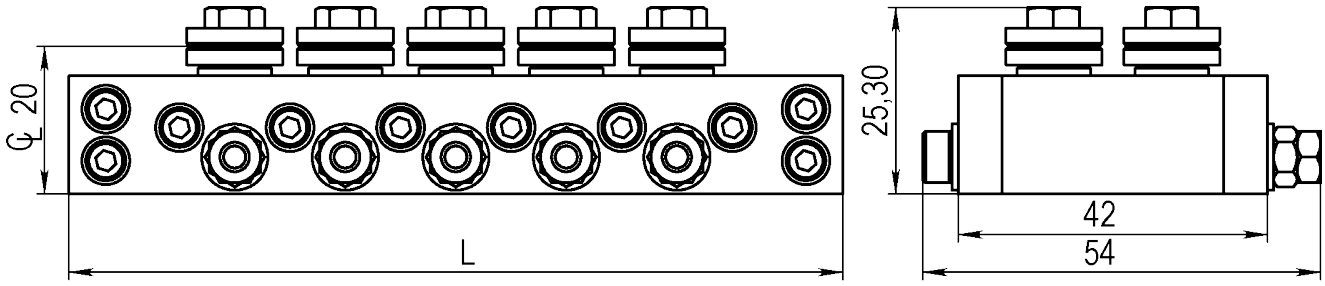

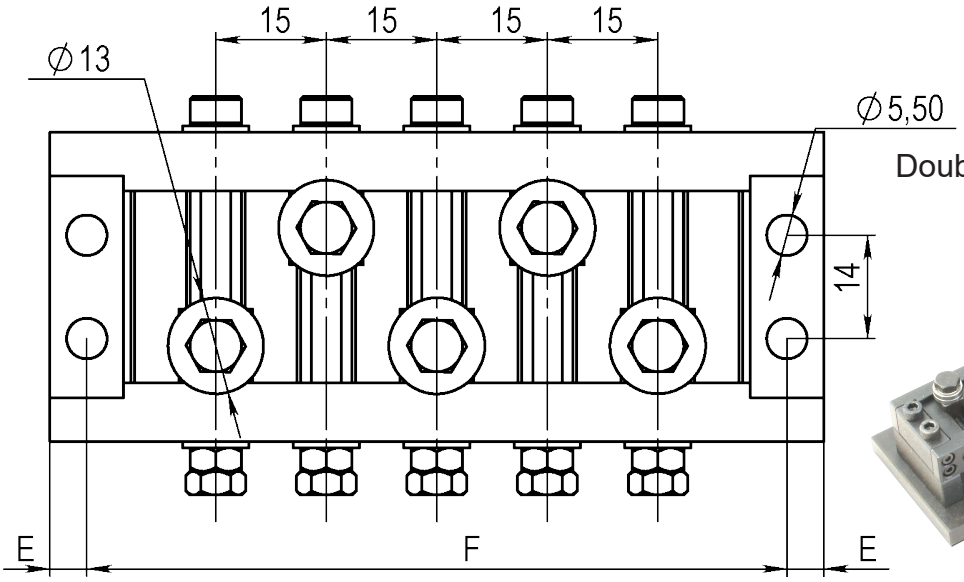

Double System:

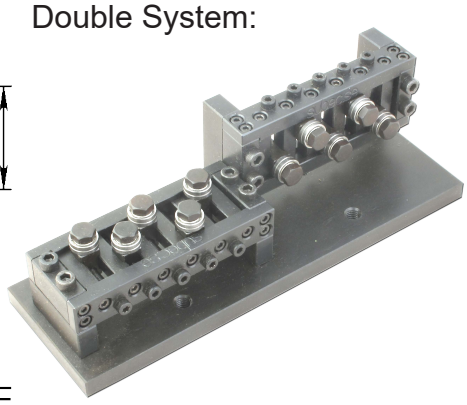

With SS13 Straightening rollers (3-400486-00)
Standard: V-groove, other profiles acc. your specifications

Type	AA5	AA7	AA9	AA11	AA13
L	105	135	165	195	225
E	5	5	5	5	5
F	95	125	155	185	215
kg					
Article Single	**06501**				**04332**
Article Double	**06502**				**06899***

Drawing No. 3-400731-00

* Stock item

Subec AB **Hesselmans Torg 5** **SE- 131 54 Nacka** **Sweden** **Phone: +46-8-88 46 33** **Email: info@subec.se** **Web: www.subec.se**

Copyright © 2026 Subec

WIRE STRAIGHTENER SERIES S16-AA

Product range: Ø 0,5-0,9mm

AA = All rollers individually adjustable

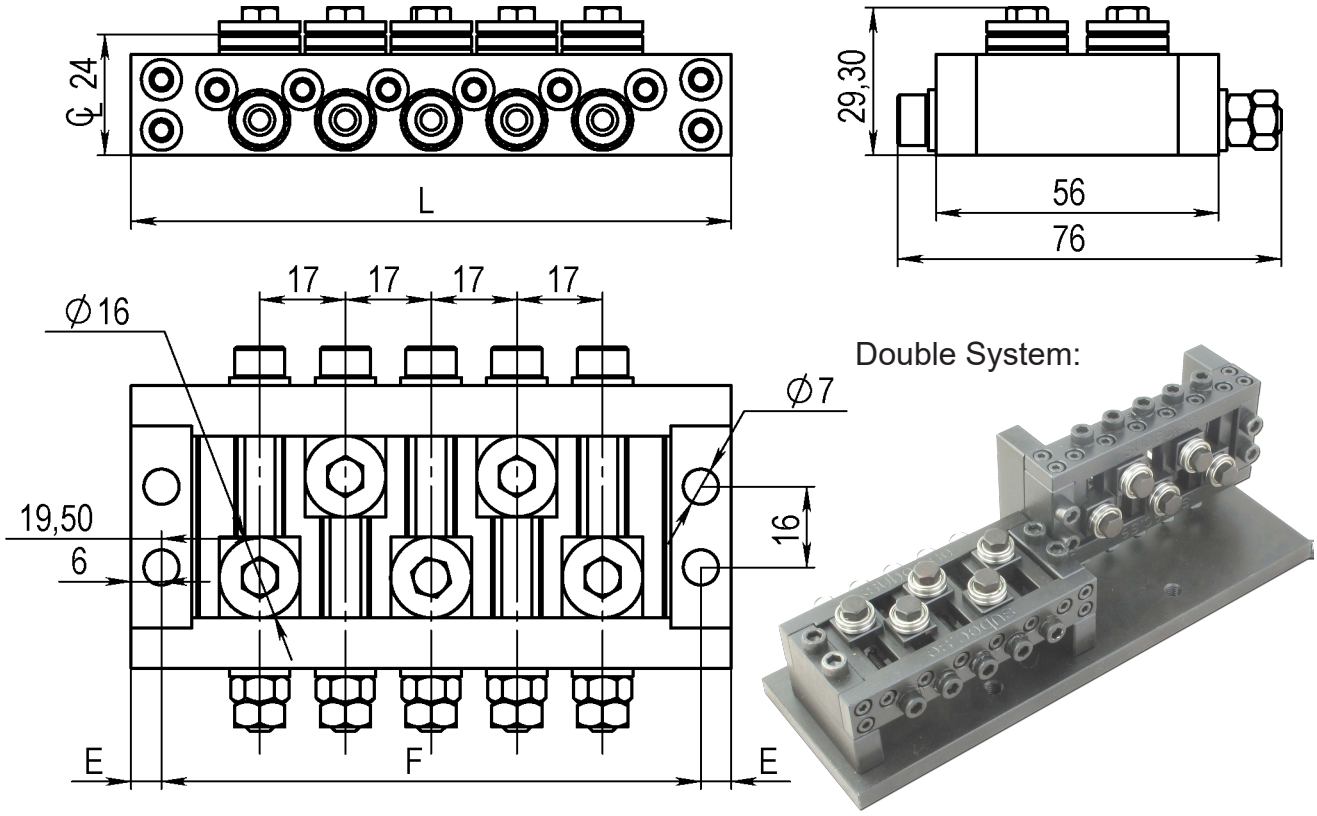

With SS16 Straightening rollers (3-400486-00)
Standard: V-groove, other profiles acc. your specifications

Type	AA5	AA7	AA9	AA11	AA13
L	119	153	187	221	255
E	6	6	6	6	6
F	107	141	175	209	243
kg					
Article Single	**06503**				
Article Double	**06505**				

Drawing No. 3-400861-00

Subec AB **Hesselmans Torg 5** **SE- 131 54 Nacka** **Sweden** **Phone: +46-8-88 46 33** **Email: info@subec.se** **Web: www.subec.se**

Copyright © 2026 Subec

WIRE STRAIGHTENER SERIES S17-Q

Product range: Ø 0,5-1,3mm

Q = Quick closing by excenter

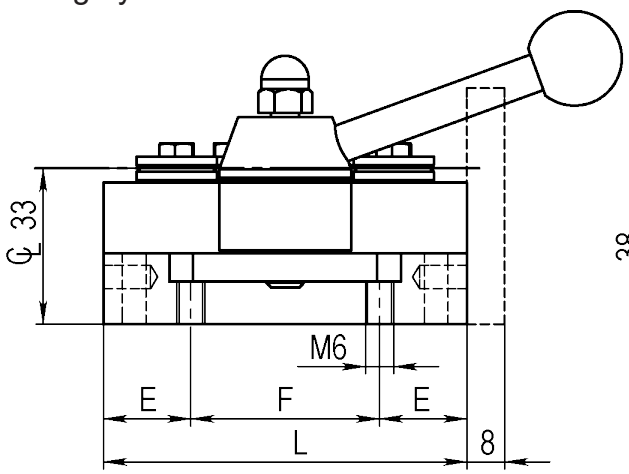

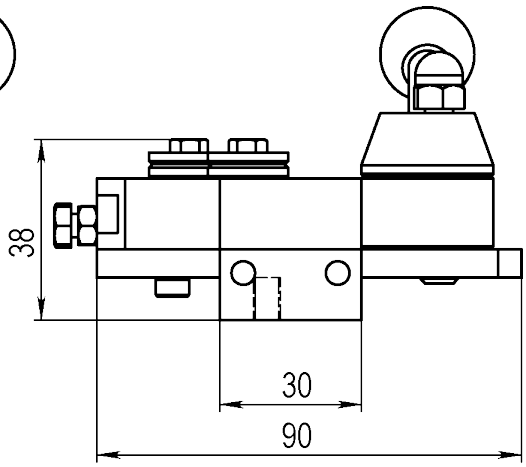

Double System:

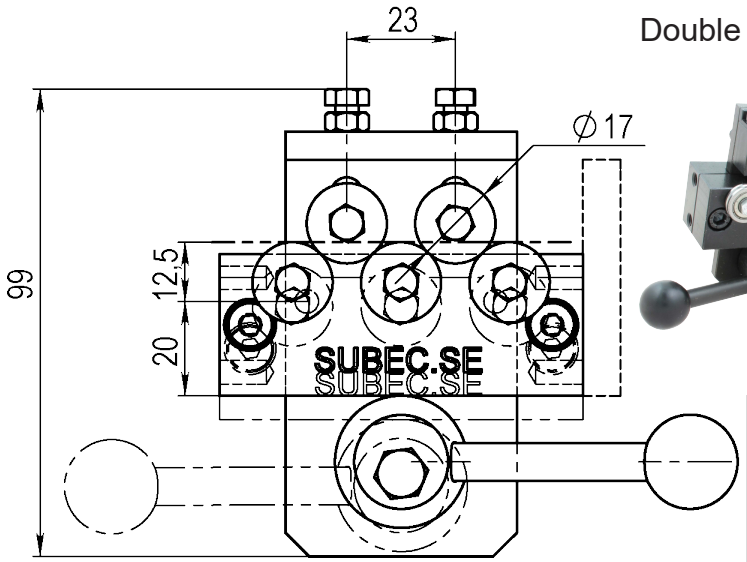

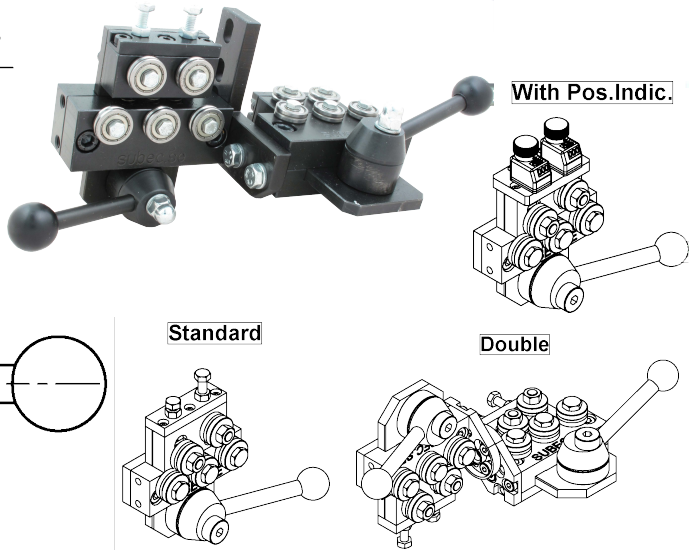

With SS17 Straightening rollers (3-400486-00)
Standard: V-groove, other profiles acc. your specifications

Type	Q5	Q7	Q9	Q11	Q13
L	77	100	123	146	169
E	18,5	16	16	16	16
F	40	68	91	130	137
kg	1	1,2			
Article Single	**06398**	**06366**			
Article Double	**06399**	**08723**			

Drawing No. 3-400850-00

Subec AB **Hesselmans Torg 5** **SE- 131 54 Nacka** **Sweden** **Phone: +46-8-88 46 33** **Email: info@subec.se** **Web: www.subec.se**

Copyright © 2026 Subec

WIRE STRAIGHTENER S17-TA-7

Product range: Ø 0,5-1,3mm

TA = Top row rollers adjustable

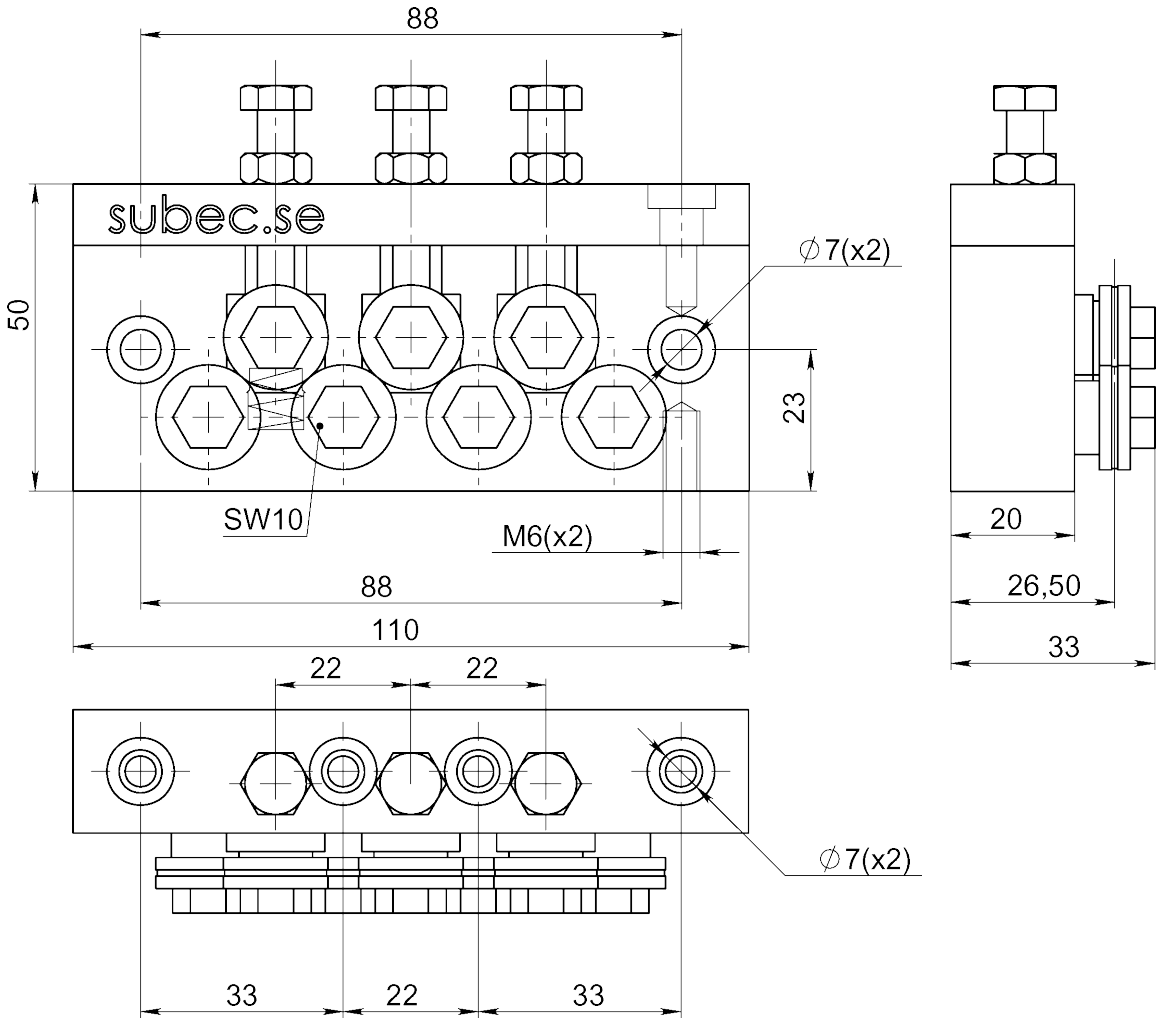



Article: 06214*
Weight: 0,8kg

Drawing No. 3-400839-00

* Stock item

Subec AB **Hesselmans Torg 5** **SE- 131 54 Nacka** **Sweden** **Phone: +46-8-88 46 33** **Email: info@subec.se** **Web: www.subec.se**

Copyright © 2026 Subec

WIRE STRAIGHTENER S17-XSL-7

Also available with standard V-Rollers for product ranges 0,5 to 1,3mm
Article: 1728

XSL = Extra Slim Line

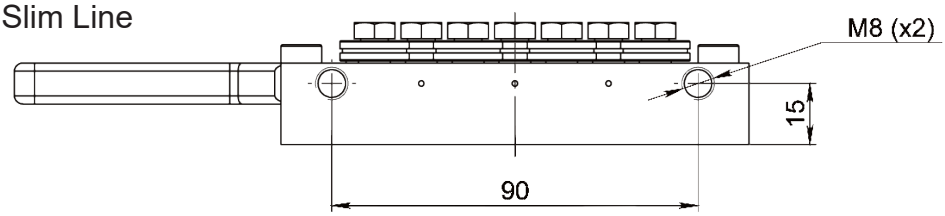

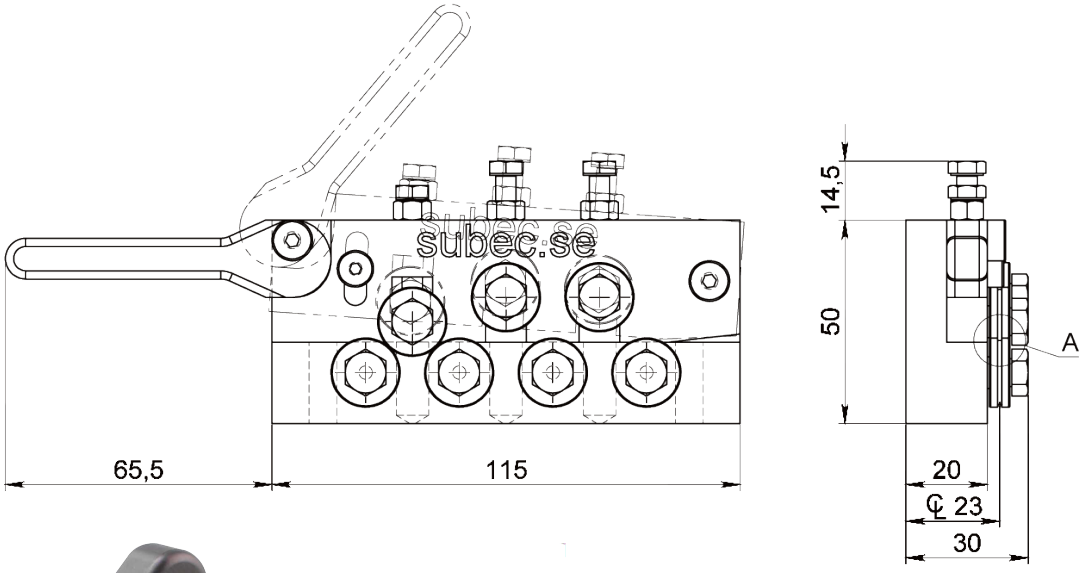



Article: 13347

DETAIL A
SCALE 5 : 1

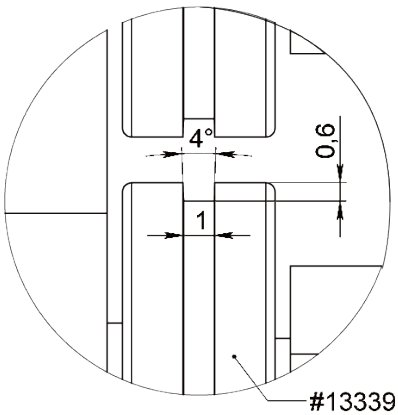

#13339
For 1mm flat products

Drawing No. 3-400655-02

Subec AB **Hesselmans Torg 5** **SE- 131 54 Nacka** **Sweden** **Phone: +46-8-88 46 33** **Email: info@subec.se** **Web: www.subec.se**

Copyright © 2026 Subec

WIRE STRAIGHTENER S19-PN-5+PN-9

Product range: Ø 0,7-1,5mm
With pneumatic open/close

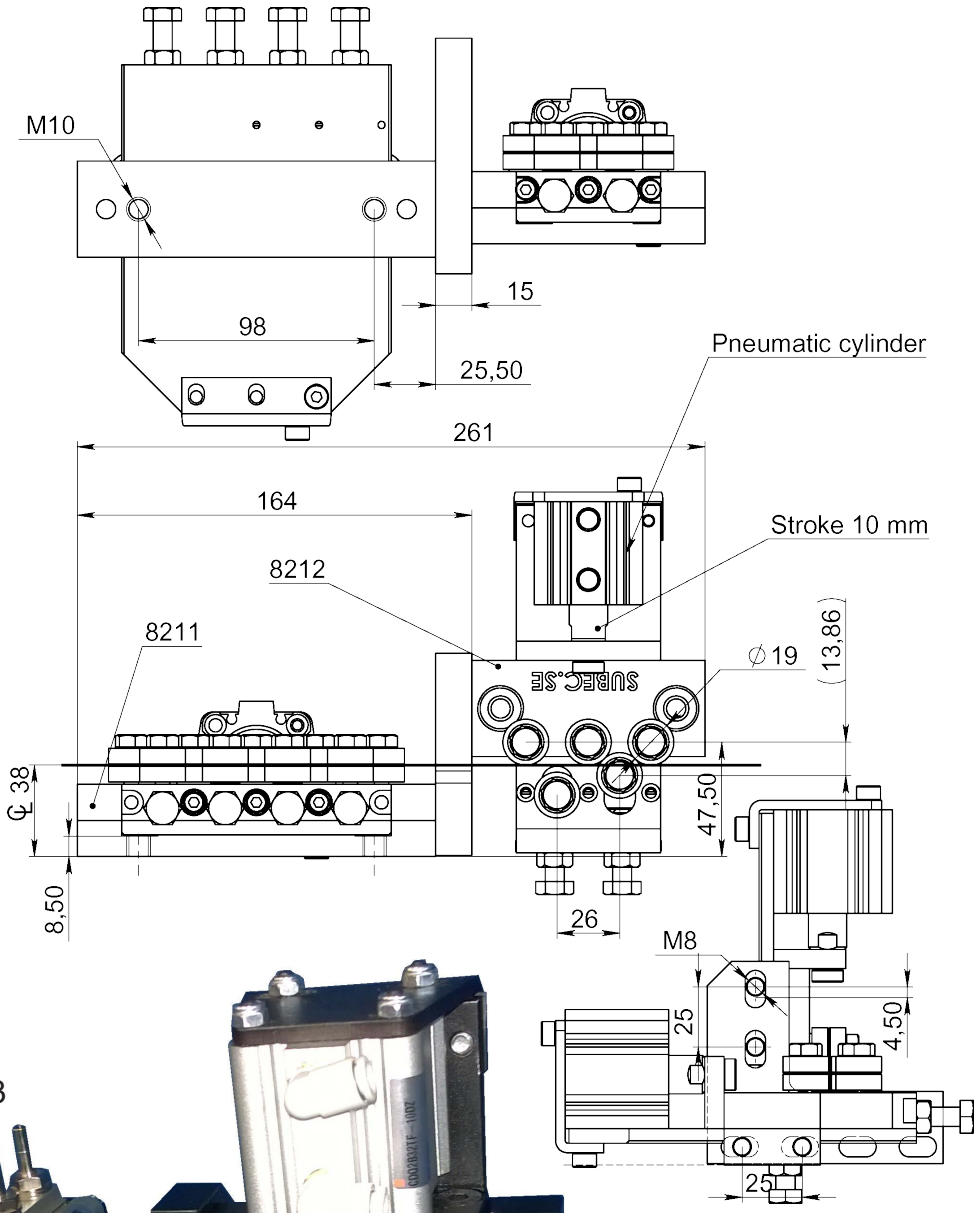

Article: 08213

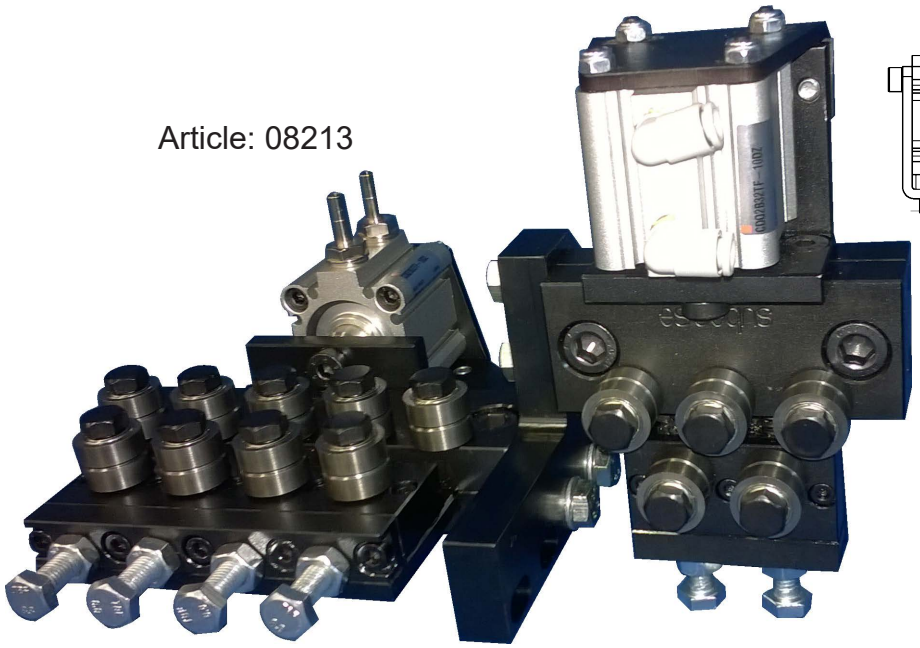

Drawing No. 3-400981-00

Subec AB **Hesselmans Torg 5** **SE- 131 54 Nacka** **Sweden** **Phone: +46-8-88 46 33** **Email: info@subec.se** **Web: www.subec.se**

Copyright © 2026 Subec

WIRE STRAIGHTENER SERIES S19-AA

Product range: Ø 0,7-1,5mm

AA = All rollers individually adjustable

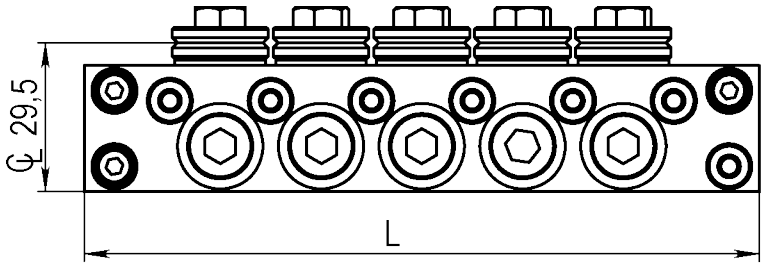

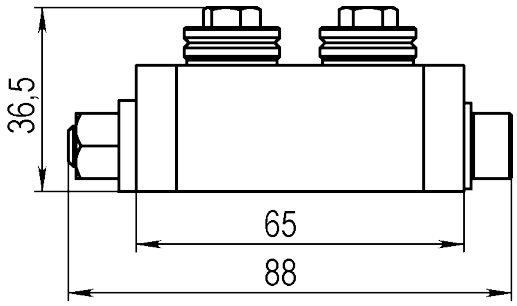

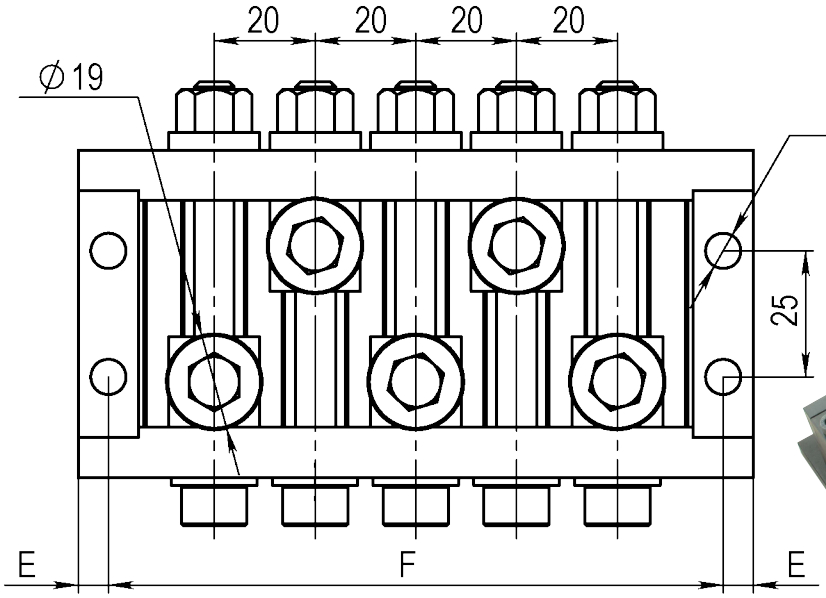

Double System:

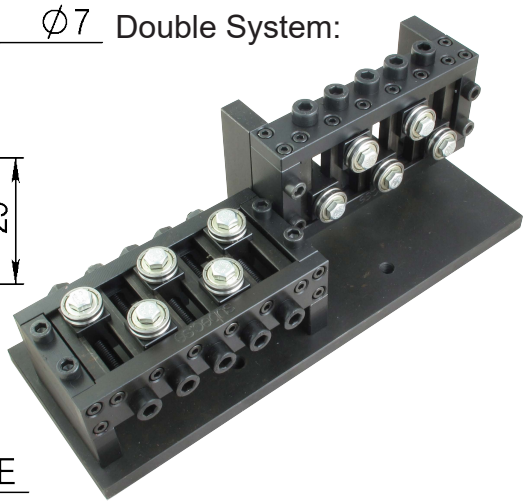

With SS19 Straightening rollers (3-400486-00)
Standard: V-groove, other profiles acc. your specifications

Type	AA5	AA7	AA9	AA11	AA13
L	134	174	214	254	294
E	6	6	6	6	6
F	122	162	202	242	282
kg					
Article Single	**06504***				
Article Double	**06506**				

Drawing No. 3-400862-00

* Stock item

Subec AB **Hesselmans Torg 5** **SE- 131 54 Nacka** **Sweden** **Phone: +46-8-88 46 33** **Email: info@subec.se** **Web: www.subec.se**

Copyright © 2026 Subec

WIRE STRAIGHTENER SERIES S22-Q

Product range: Ø 0,8-1,6mm

Q = Quick closing by excenter

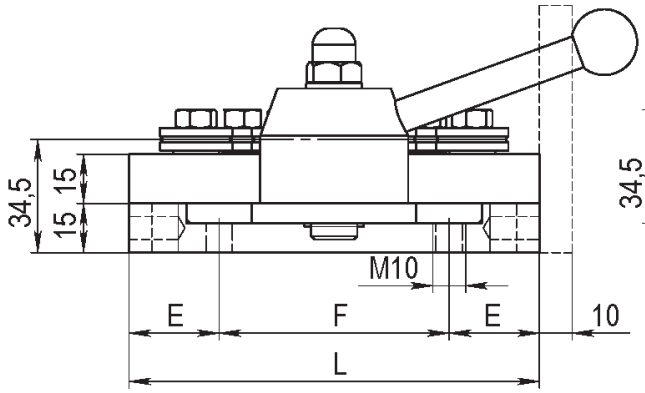

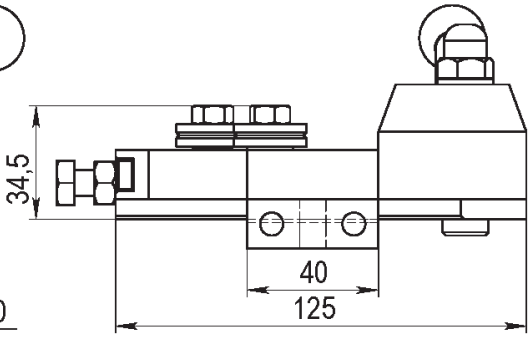

Double System:

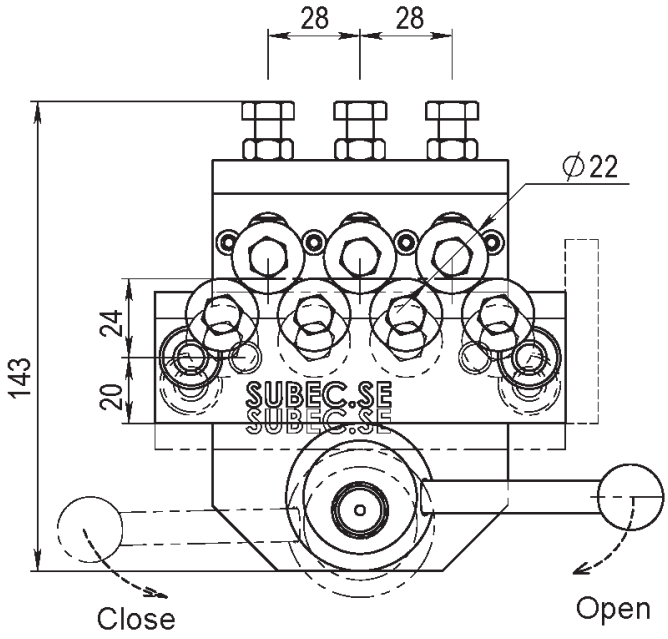

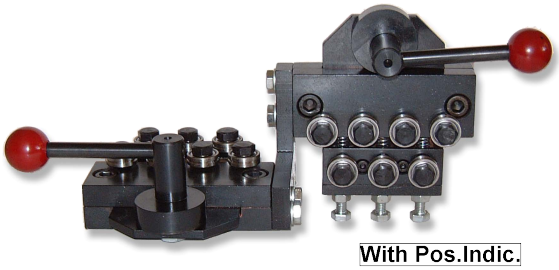

With Pos.Indic.

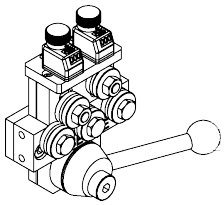

Standard

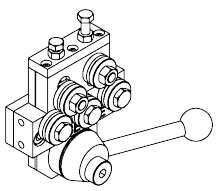

Double

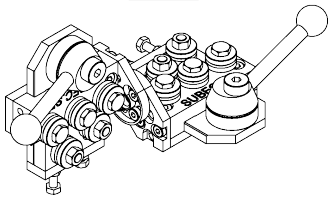

With SS22 Straightening rollers (3-400486-00)
Standard: V-groove, other profiles acc. your specifications

Type	Q5	Q7	Q9	Q11	Q13
L	97	125	153	181	209
E	27,5	27,5	27,5	27,5	27,5
F	42	70	98	126	154
kg	2,15	2,5			
Article Single	**01299**	**00765**	**07080**	**10313**	**02265**
Article Double	**01000***	**02538**	**07081**	**10150**	**01002**

Drawing No. 3-400409-00

* Stock item

Subec AB **Hesselmans Torg 5** **SE- 131 54 Nacka** **Sweden** **Phone: +46-8-88 46 33** **Email: info@subec.se** **Web: www.subec.se**

Copyright © 2026 Subec

WIRE STRAIGHTENER SERIES S22-AA

Product range: Ø 0,8-1,6mm

AA = All rollers individually adjustable

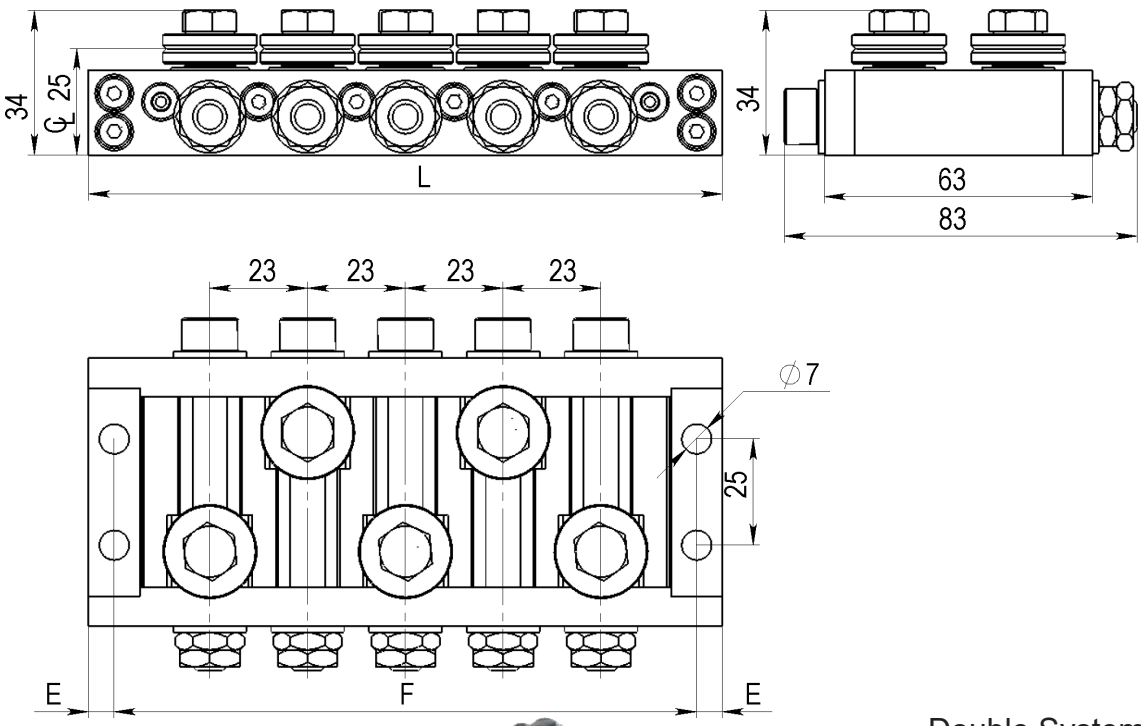

Double System:

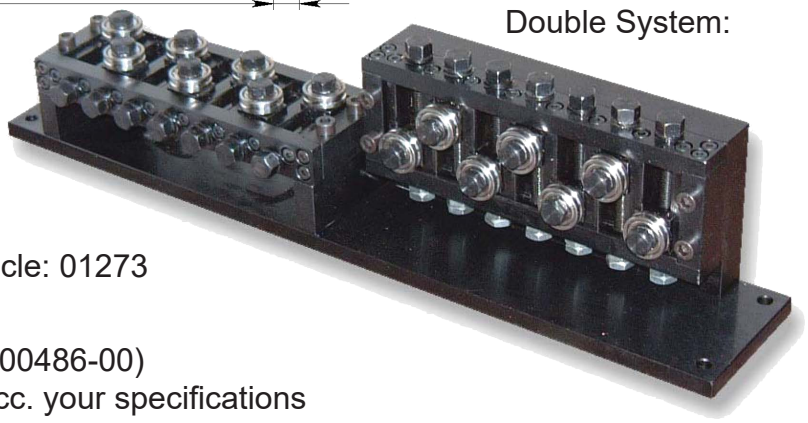

Article: 01273

With SS22 Straightening rollers (3-400486-00)
Standard: V-groove, other profiles acc. your specifications

Type	AA-5	AA-7	AA-9	AA-11	AA-13
					
L	149	195	241	287	333
E	6	6	6	6	6
F	137	183	229	275	321
kg					
Article Single	**01610**	**01248***	**00671**		
Article Double	**01611**	**01273**	**00206**		

Drawing No. 3-400466-00

* Stock item

Subec AB **Hesselmans Torg 5** **SE- 131 54 Nacka** **Sweden** **Phone: +46-8-88 46 33** **Email: info@subec.se** **Web: www.subec.se**

Copyright © 2026 Subec

WIRE STRAIGHTENER S22-Q-AA-13

Product range: Ø 0,8-1,6mm

Q = Quick closing by excenter
AA = All rollers individually adjustable

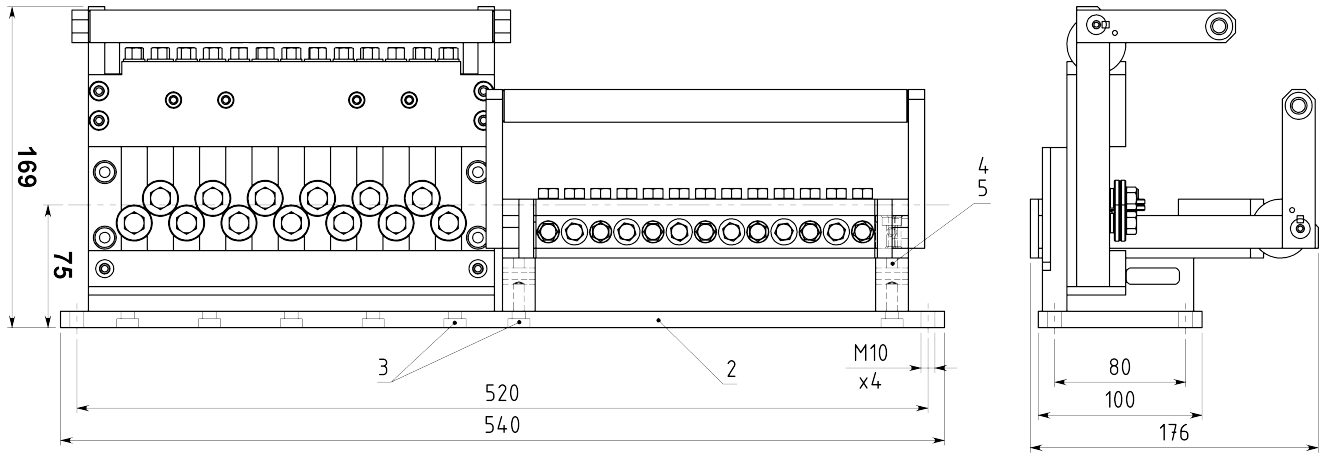

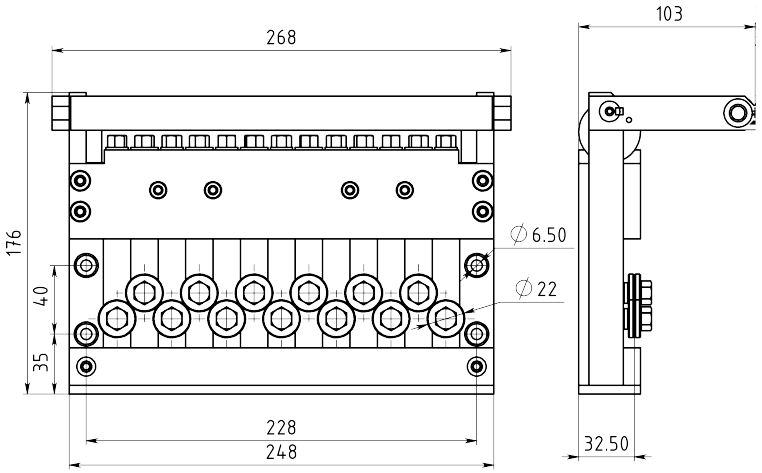

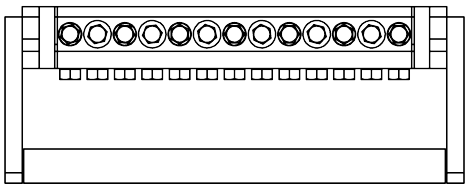

Article: 01700

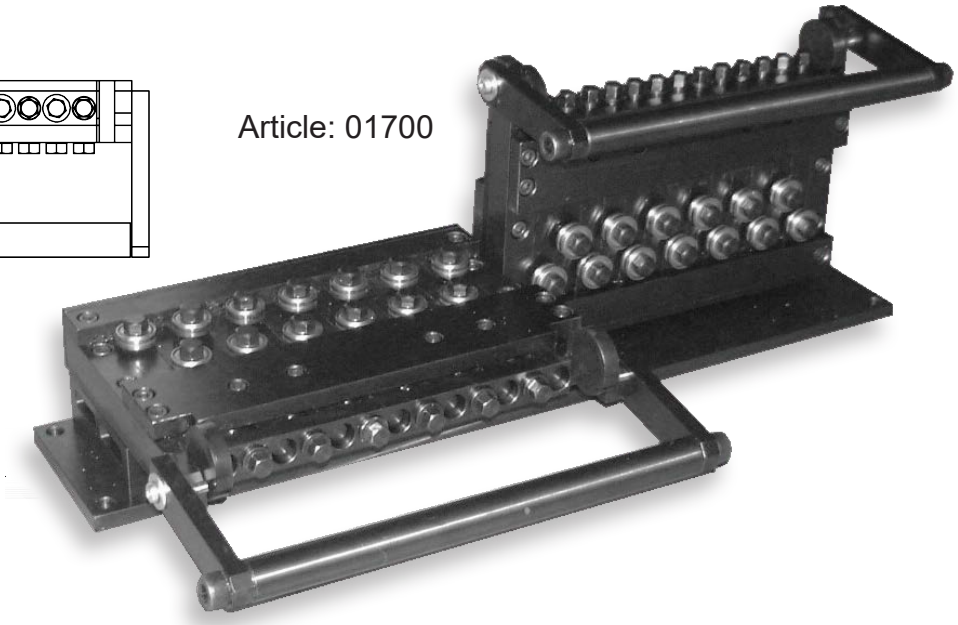

Drawing No. 3-400503-00

Subec AB **Hesselmans Torg 5** **SE- 131 54 Nacka** **Sweden** **Phone: +46-8-88 46 33** **Email: info@subec.se** **Web: www.subec.se**

Copyright © 2026 Subec

WIRE STRAIGHTENER S22-TA-7

Product range: Ø 0,8-1,6mm

TA = Top row rollers adjustable

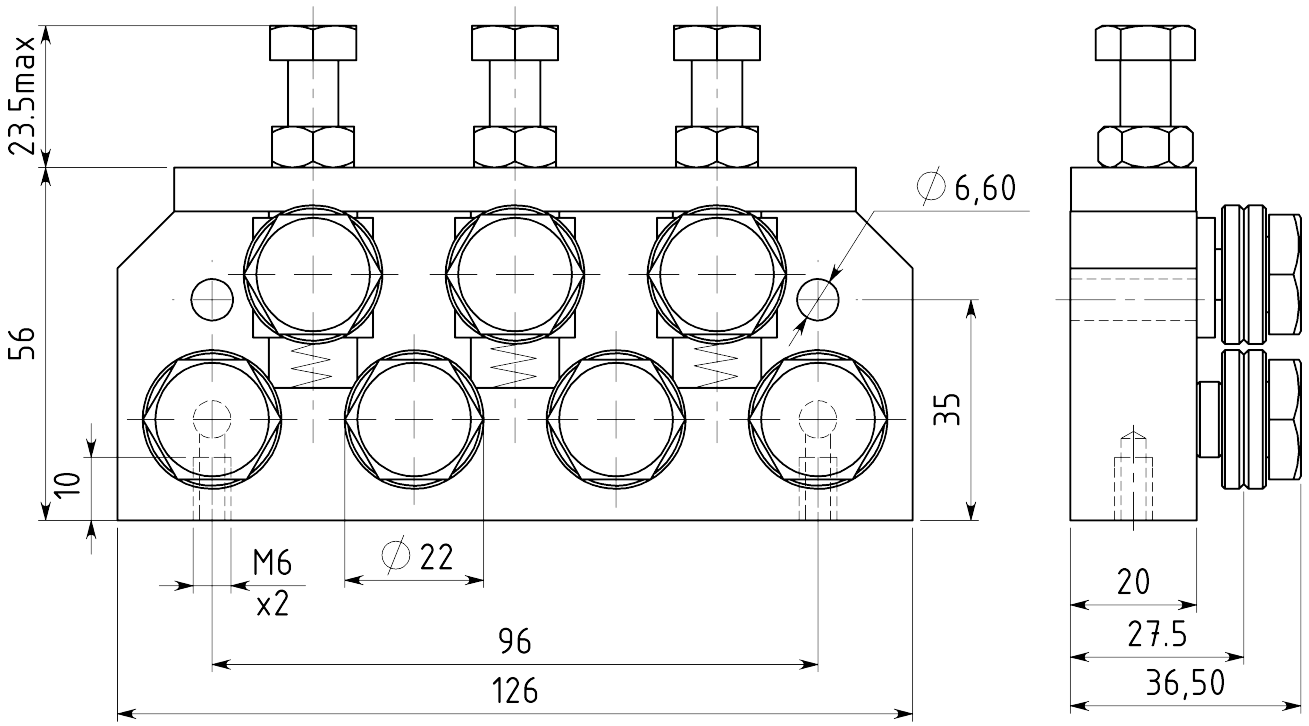

Article: 02158*



Article: 07974*

Drawing No. 3-400537-00

* Stock item

Subec AB **Hesselmans Torg 5** **SE- 131 54 Nacka** **Sweden** **Phone: +46-8-88 46 33** **Email: info@subec.se** **Web: www.subec.se**

Copyright © 2026 Subec

WIRE STRAIGHTENER S22-S30-TA-5

Product range: Ø 0,8-1,6mm

TA = Top row rollers adjustable

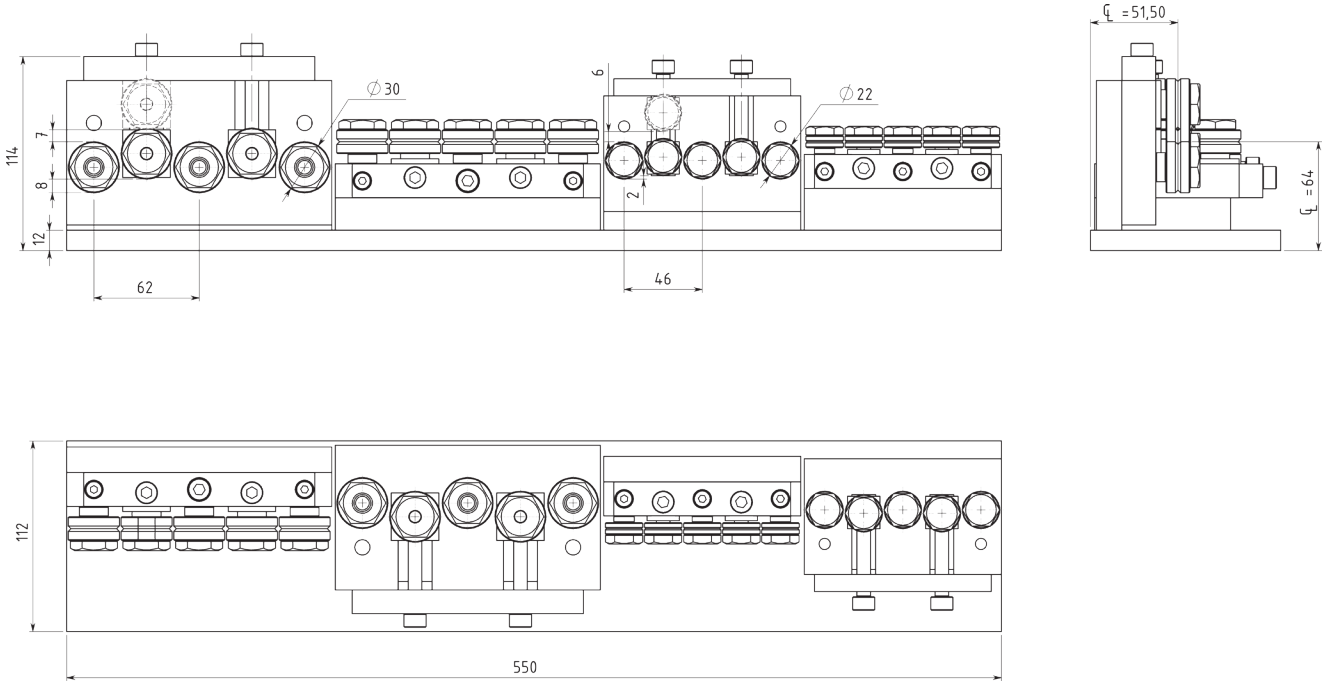

Article: 02886



Drawing No. 3-400620-00

Subec AB **Hesselmans Torg 5** **SE- 131 54 Nacka** **Sweden** **Phone: +46-8-88 46 33** **Email: info@subec.se** **Web: www.subec.se**

Copyright © 2026 Subec

WIRE STRAIGHTENER SERIES S23-Q

Product range: Ø 0,8-1,6mm

Q = Quick closing by excenter

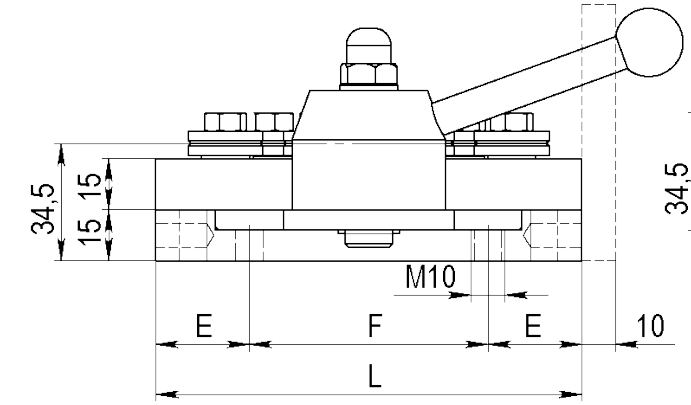

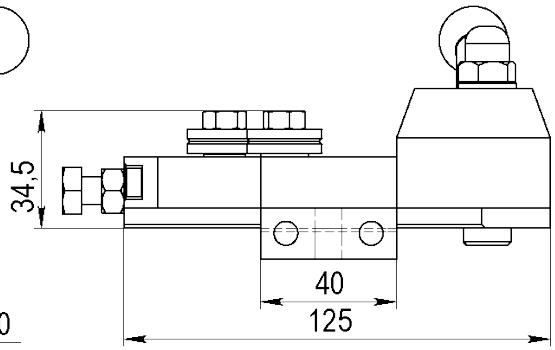

Standard

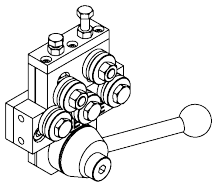

With Pos.Indic.

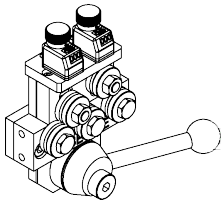

Double

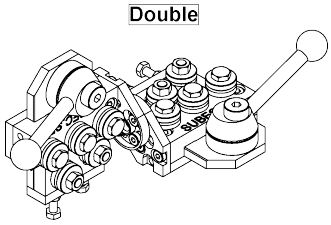

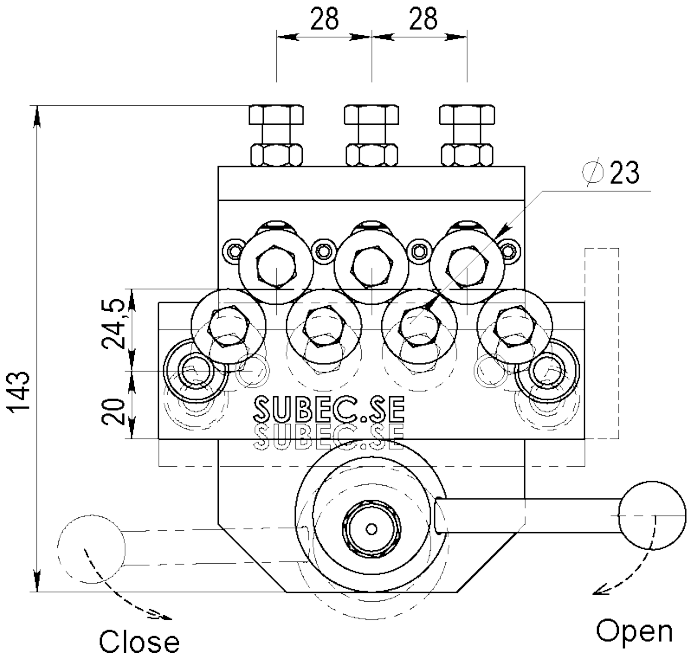

With SS23 Straightening rollers (3-400475-00)
Standard: V-groove, other profiles acc. your specifications

Type	Q5	Q7	Q9	Q11	Q13
L	97	125	153	181	
E	27,5	27,5	27,5	27,5	
F	42	70	98	126	
kg	2,15	2,5			
Article Single			**08592**		
Article Double			**08562**		

Drawing No. 3-400409-00

Subec AB **Hesselmans Torg 5** **SE- 131 54 Nacka** **Sweden** **Phone: +46-8-88 46 33** **Email: info@subec.se** **Web: www.subec.se**

Copyright © 2026 Subec

WIRE STRAIGHTENER SERIES S26-AA

Product range: Ø 0,8-3,0mm

AA = All rollers individually adjustable

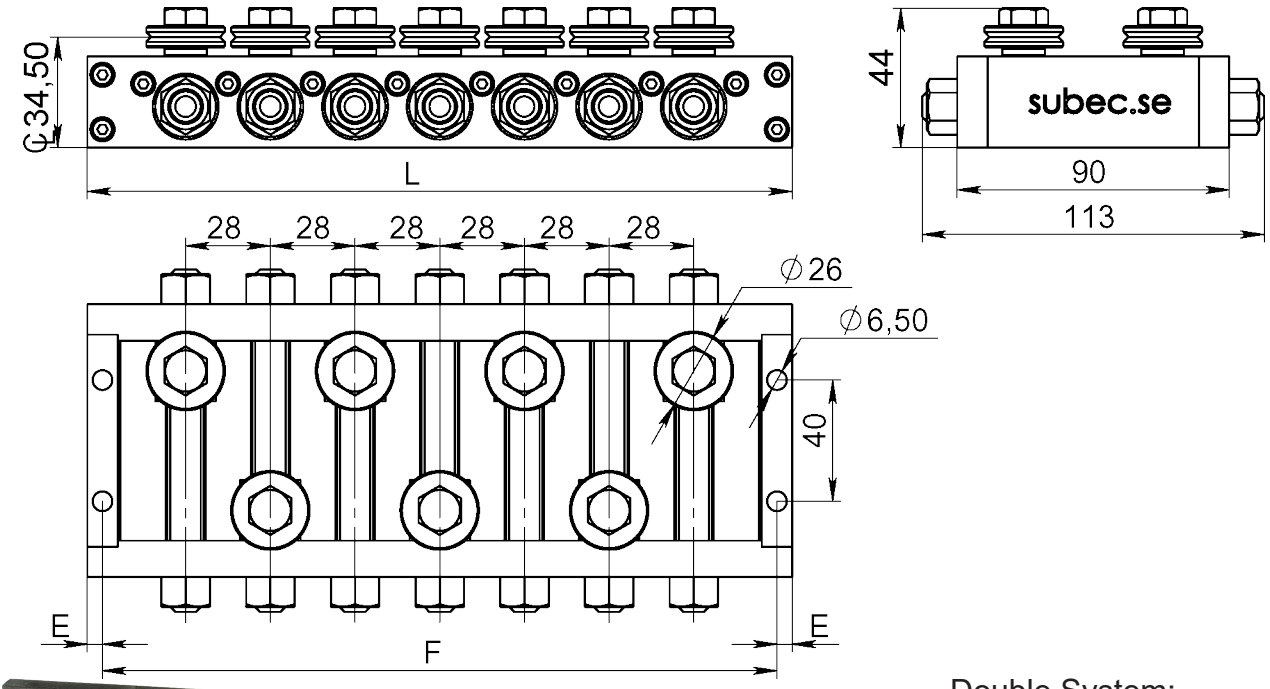

Double System:



With SS26 Straightening rollers (3-400486-00)
Standard: V-groove, other profiles acc. your specifications

Type	AA5	AA7	AA9	AA11	AA13
L	177	233	289	345	401
E	5	5	5	5	5
F	167	223	279	335	391
kg		3			
Article Single		**00674A***	**00675**		
Article Double		**04530***	**13118**		

Drawing No. 3-200021-00

* Stock item

Subec AB **Hesselmans Torg 5** **SE- 131 54 Nacka** **Sweden** **Phone: +46-8-88 46 33** **Email: info@subec.se** **Web: www.subec.se**

Copyright © 2026 Subec

WIRE STRAIGHTENER SERIES
S30,31,32-Q

Q = Quick closing by excenter

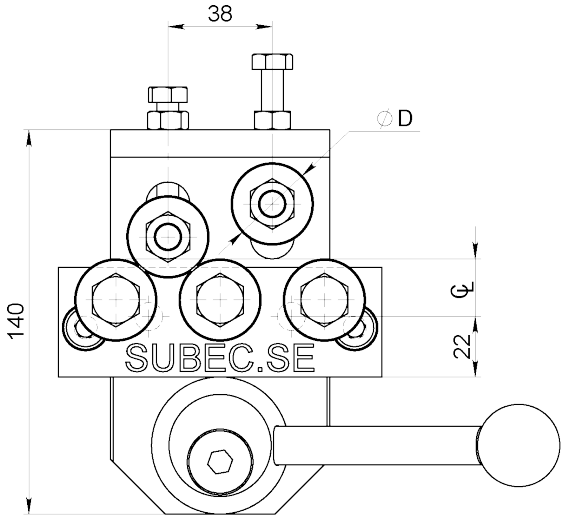

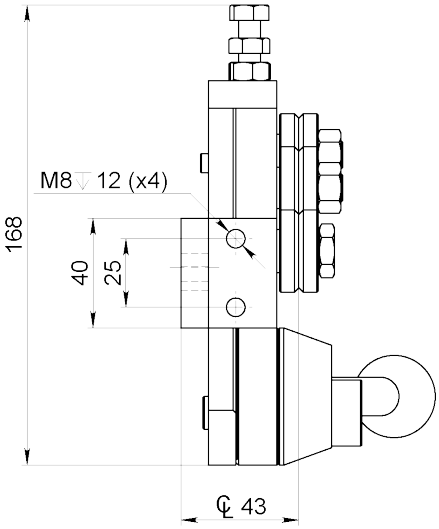

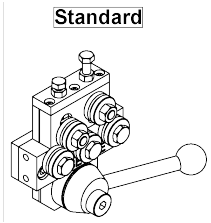

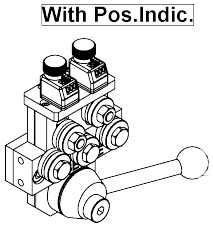

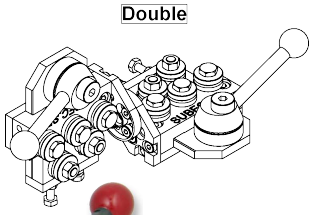

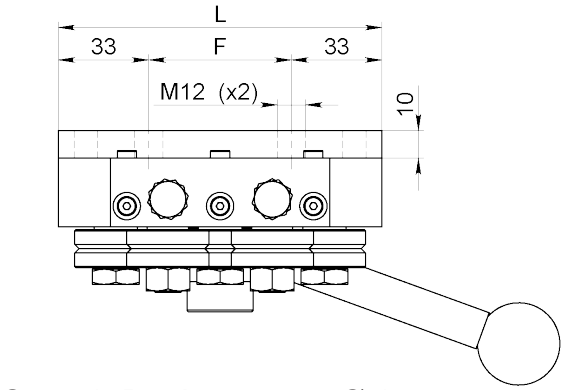

Double System:



S30,31: Product range: Ø 1,5-3,0mm
S32: Product range: Ø 1,5-4,0mm

Standard: V-groove, other profiles acc. your specifications

Type	Q5*	Q7*	Q9*	Q11	Q13*
L	118	156	194	232	270
F	52	90	128	166	204
kg	3,25	4	5	6	7,5
S30. Single	**00811**	**00677**	**02526**	**00820**	**01538**
S30. Double	**00664**	**00819**	**01468**	**00974**	**01171**
S31. Single	**07577**	**07581**			
S31. Double	**07582**	**07580**			
S32. Single	**02602**	**01917**			**13263**
S32. Double	**06241**	**10133**	**06604**	**06605**	

Drawing No. 3-400390-00

Subec AB **Hesselmans Torg 5** **SE- 131 54 Nacka** **Sweden** **Phone: +46-8-88 46 33** **Email: info@subec.se** **Web: www.subec.se**

Copyright © 2026 Subec

WIRE STRAIGHTENER SERIES S30,31,32-AA

Product range: Ø 1,5-4,0mm

AA = All rollers individually adjustable

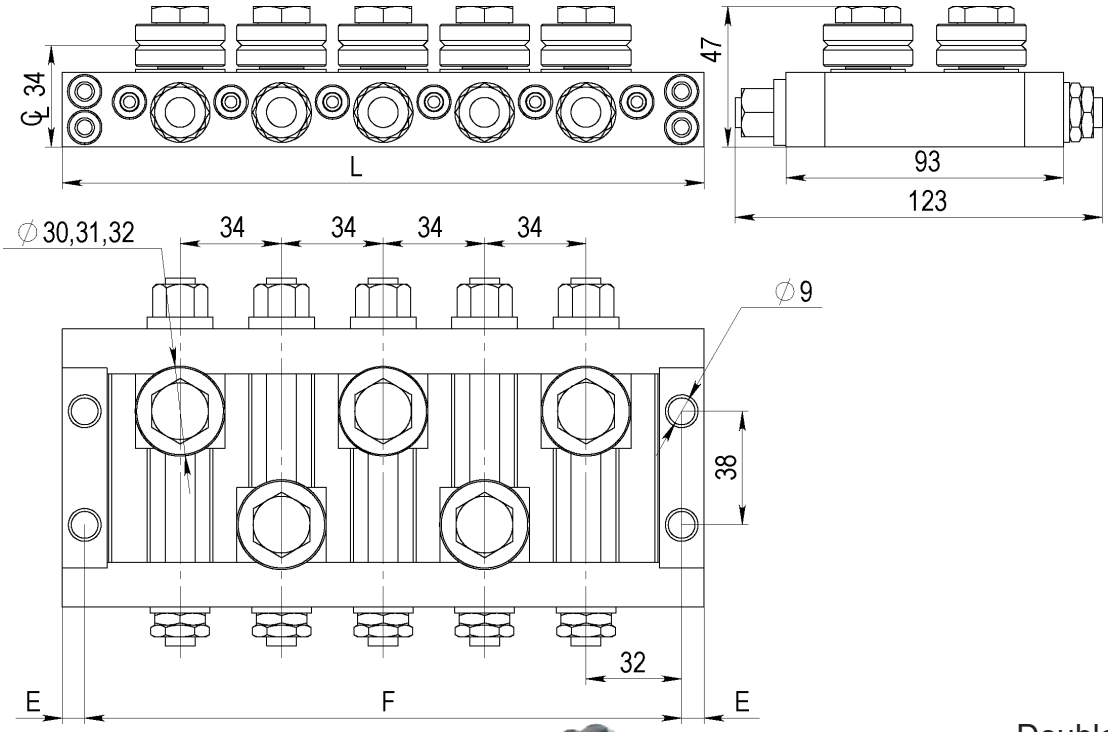

Double System:

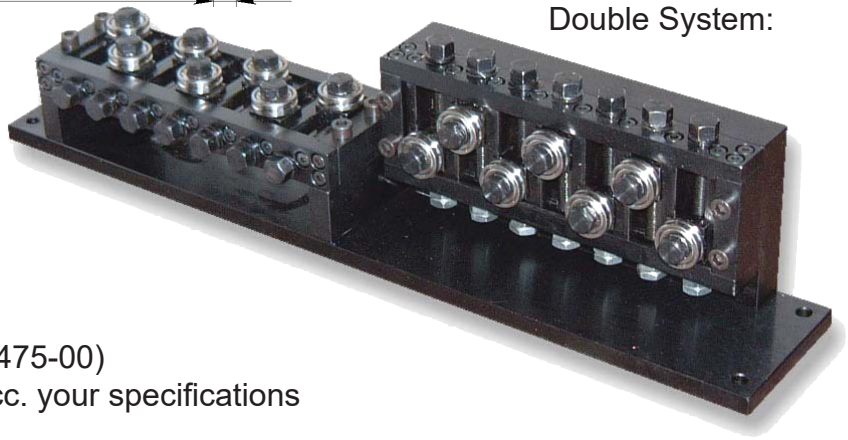

With SD Straightening rollers (3-400475-00)
Standard: V-groove, other profiles acc. your specifications

Type	AA-5	AA-7	AA-9	AA-11	AA-13
L	215	283	351	419	487
E	7,5	7,5	7,5	7,5	7,5
F	200	268	336	404	472
kg					
Article Single	**06963**				
Article Double	**03316**	**06999**	**03056**		

Drawing No. 3-400894-00

Subec AB **Hesselmans Torg 5** **SE- 131 54 Nacka** **Sweden** **Phone: +46-8-88 46 33** **Email: info@subec.se** **Web: www.subec.se**

Copyright © 2026 Subec

WIRE STRAIGHTENER SERIES S30,32-TA

Product range: Ø 1,5-4,0mm

TA = Top row rollers adjustable

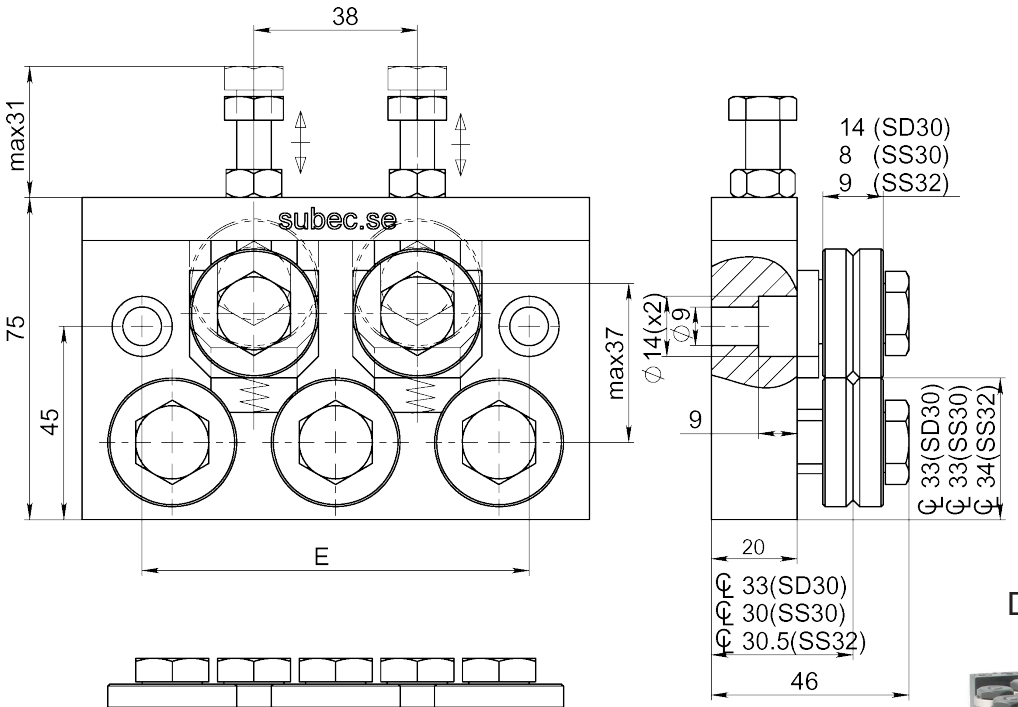

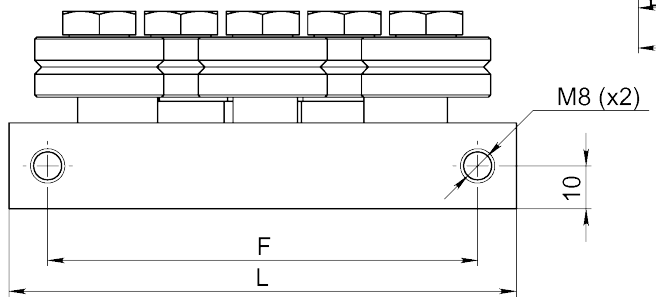

Double System:

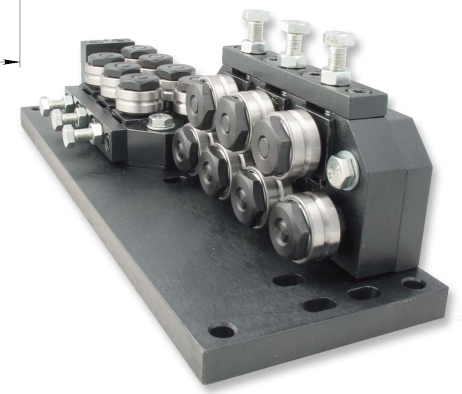

With SD/SS Straightening rollers (3-400475-00 / 3-400486-00)
Standard: V-groove, other profiles acc. your specifications

Type	TA-5	TA-7	TA-9	TA-11	TA-13
					
L	118	156	195		
E	90	128	166		
F	100	128	166		
kg	0,5	0,8	1,2		
Article Single	**06860**	**04025**	**20831**		
Article Double	**02104**	**02103**	**20832**		

Drawing No. 3-400526-00

Subec AB **Hesselmans Torg 5** **SE- 131 54 Nacka** **Sweden** **Phone: +46-8-88 46 33** **Email: info@subec.se** **Web: www.subec.se**

Copyright © 2026 Subec

WIRE STRAIGHTENER S30-Q-AA-9

Product range: Ø 1,5-3,0mm

Q = Quick closing by excenter
AA = All rollers individually adjustable

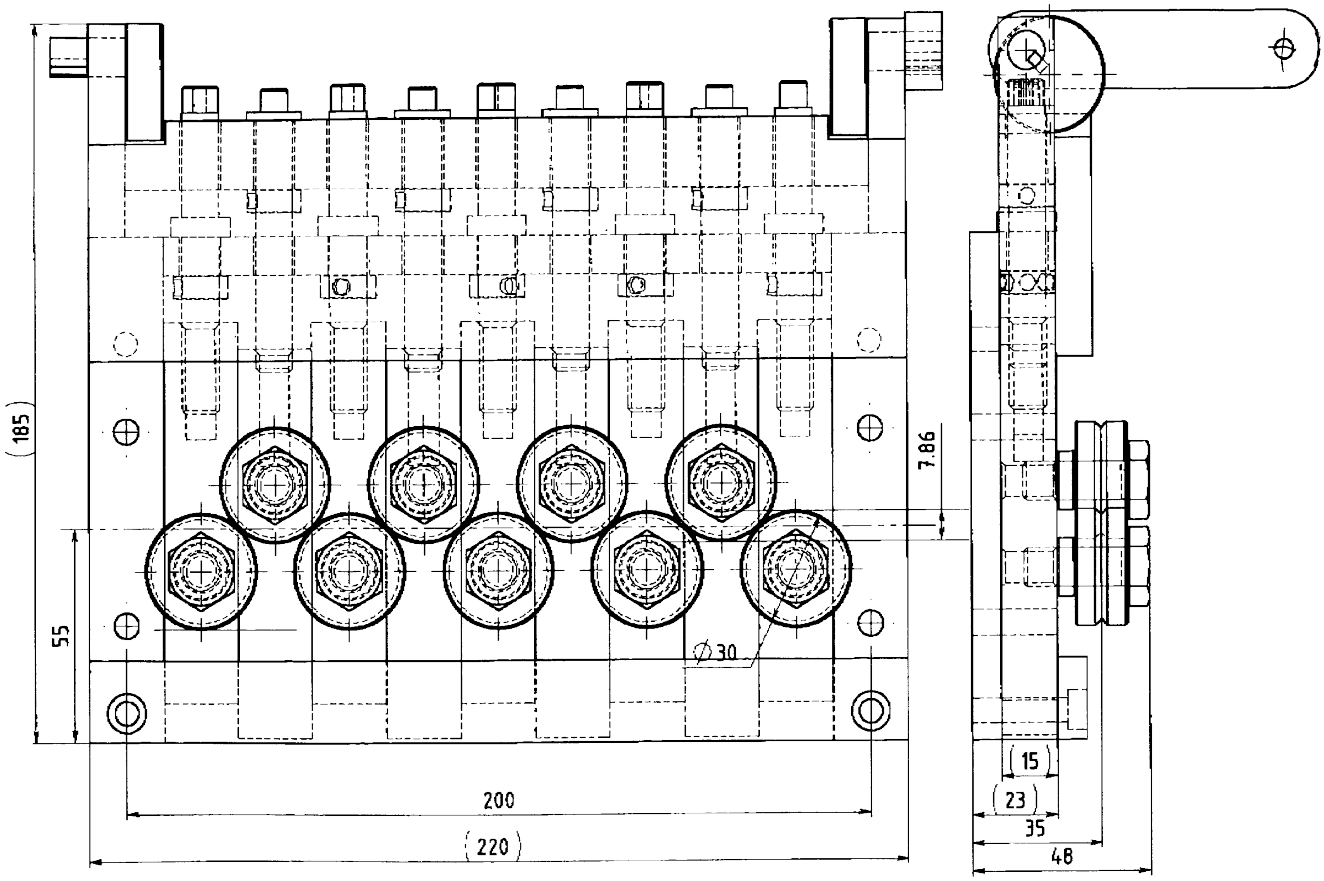

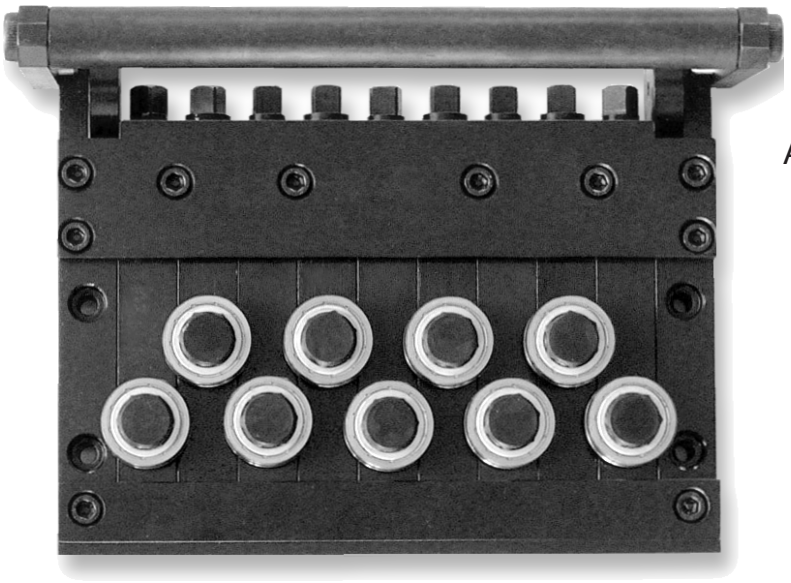

Article: 00999

With SD Straightening rollers

Drawing No. 3-400447-00

Subec AB
Hesselmans Torg 5
SE- 131 54 Nacka
Sweden
Phone: +46-8-88 46 33
Email: info@subec.se
Web: www.subec.se

Copyright © 2026 Subec

WIRE STRAIGHTENER S30-R-13

Product range: Ø 1,5-3,0mm

R = Rails

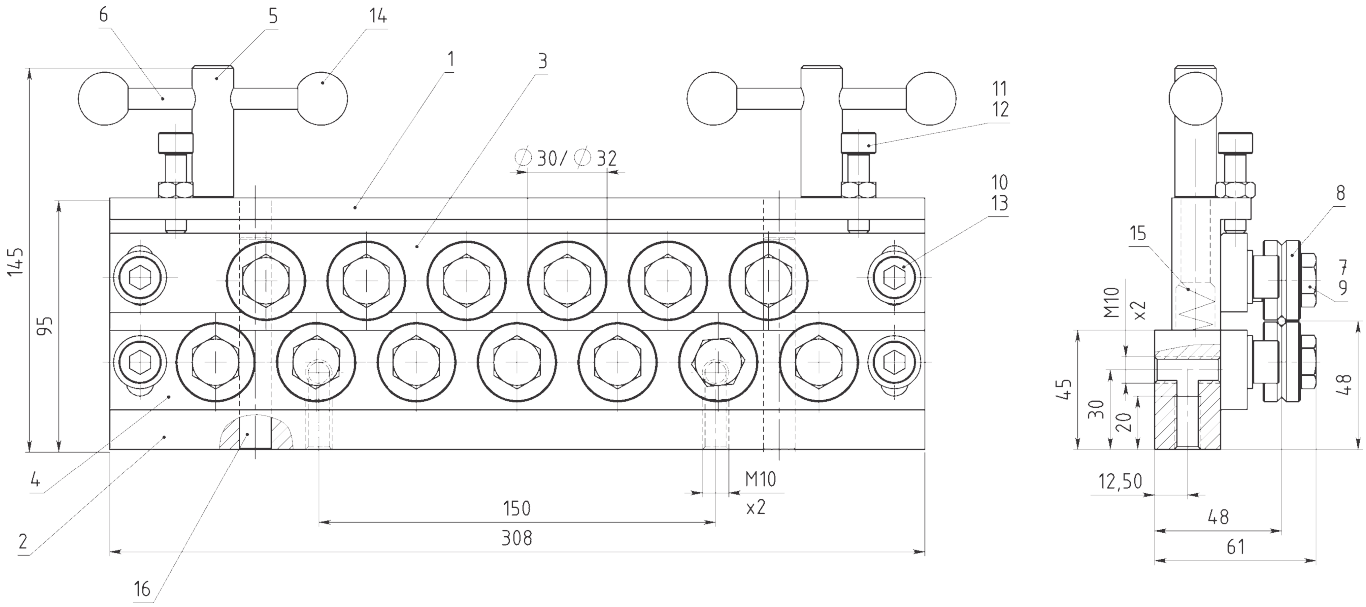



Article: 01226*
Weight: 9kg

With SD Straightening rollers

Drawing No. 3-400456-00

* Stock item

Subec AB **Hesselmans Torg 5** **SE- 131 54 Nacka** **Sweden** **Phone: +46-8-88 46 33** **Email: info@subec.se** **Web: www.subec.se**

Copyright © 2026 Subec

WIRE STRAIGHTENER S30-H-3

Product range: Ø 1,5-3,0mm
With hydraulic open/close

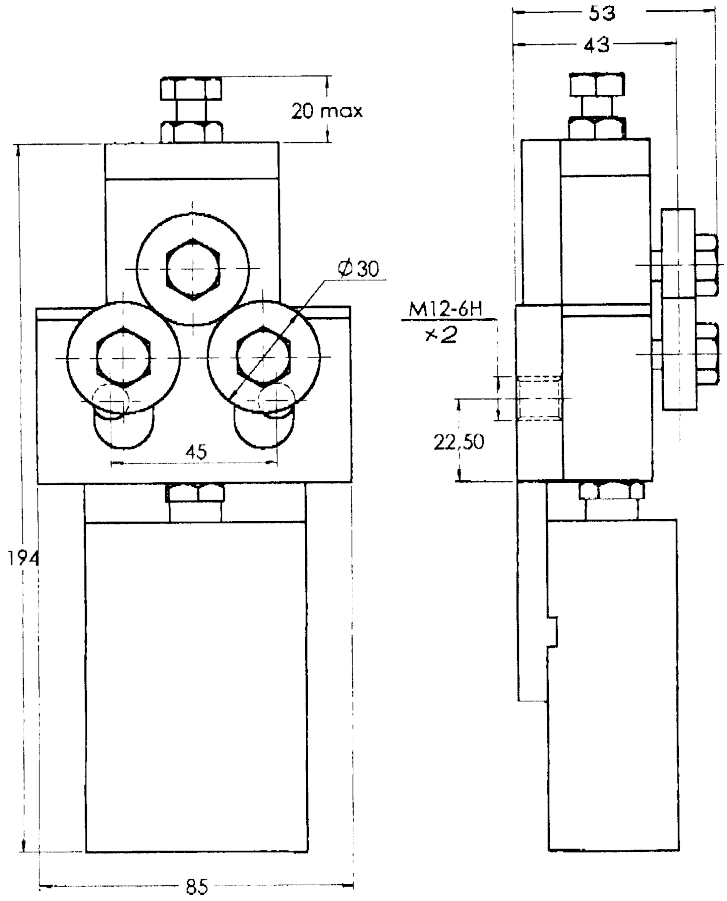

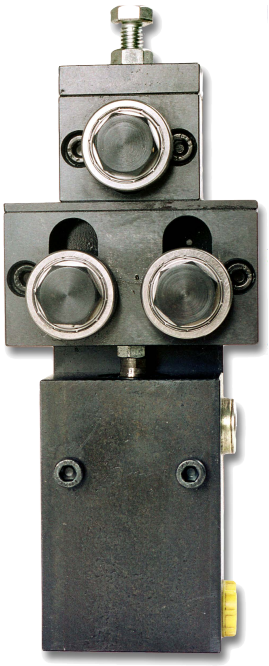

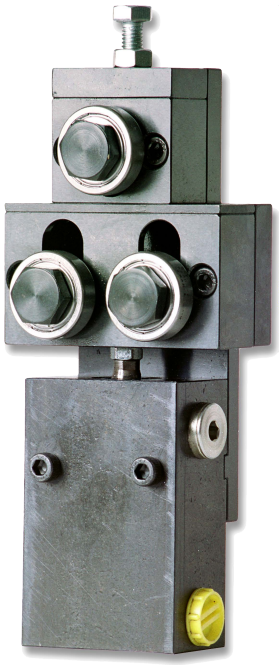

Article: 00665*
Weight: 3,25kg

With SD Straightening rollers

Drawing No. 3-400396-00

* Stock item

Subec AB **Hesselmans Torg 5** **SE- 131 54 Nacka** **Sweden** **Phone: +46-8-88 46 33** **Email: info@subec.se** **Web: www.subec.se**

Copyright © 2026 Subec

WIRE STRAIGHTENER SERIES S30-XSL-5

Product range: Ø 1,5-3,0mm

Execution with SS rollers

XSL = Extra Slim Line



Article: 00043
Weight: 2,2kg

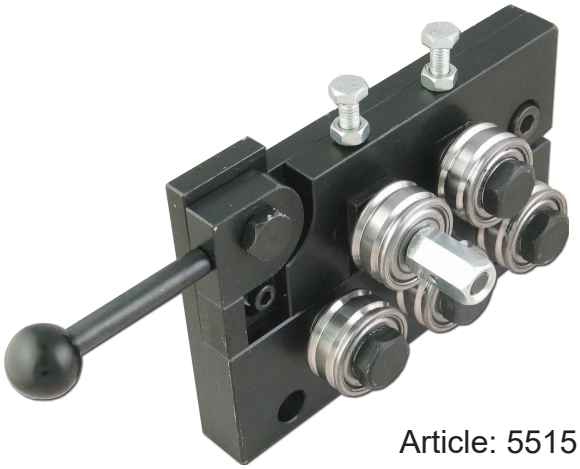

Article: 5515

Option: With Helix roller

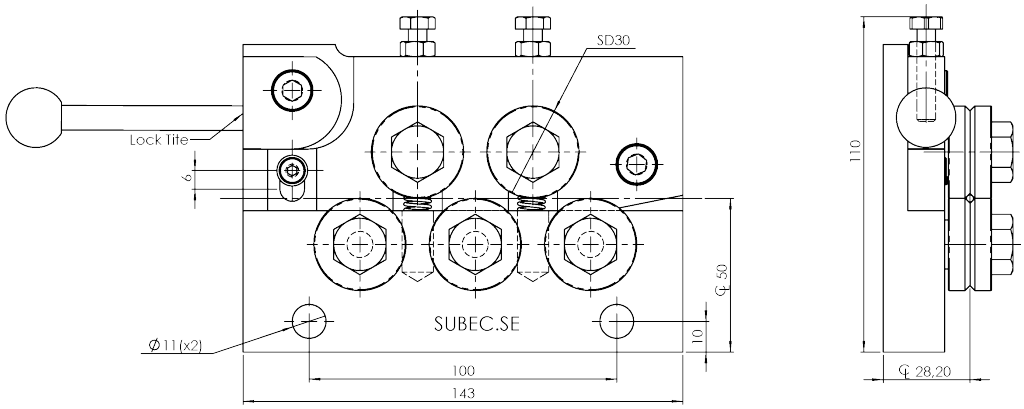

3-400655-02/04571 With SD Rollers

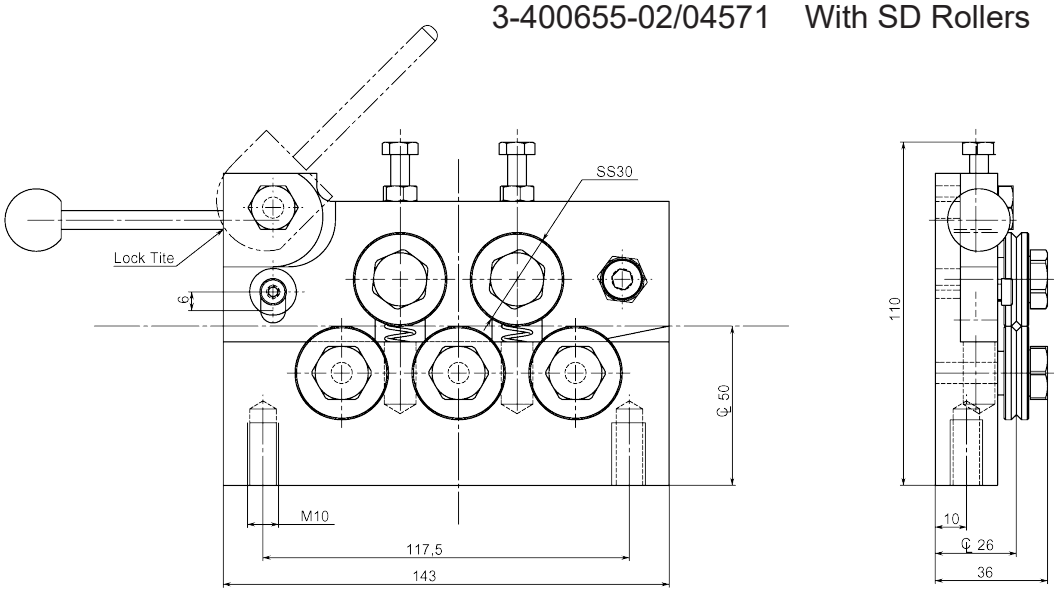

3-400655-01/00043 With SS Rollers

Drawing No. 3-400655-02

Subec AB **Hesselmans Torg 5** **SE- 131 54 Nacka** **Sweden** **Phone: +46-8-88 46 33** **Email: info@subec.se** **Web: www.subec.se**

Copyright © 2026 Subec

WIRE STRAIGHTENER SERIES S35-Q

Product range: Ø 2,0-4,5mm

Q = Quick closing by excenter

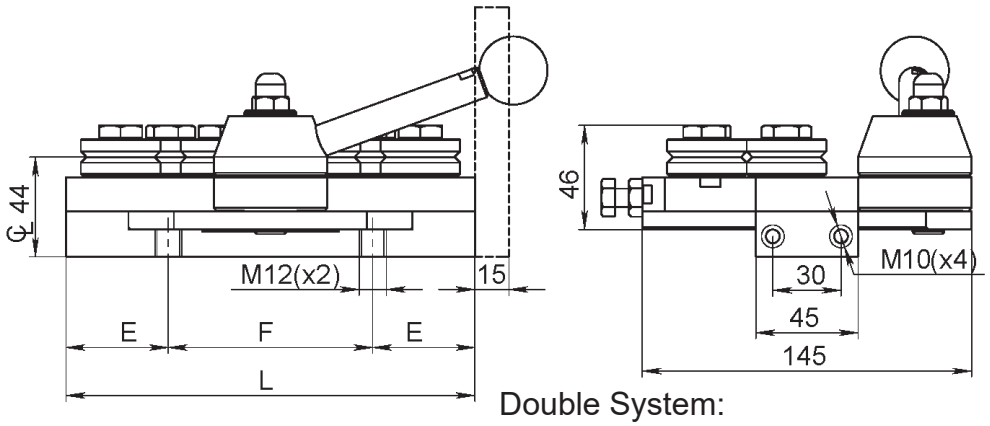

Double System:

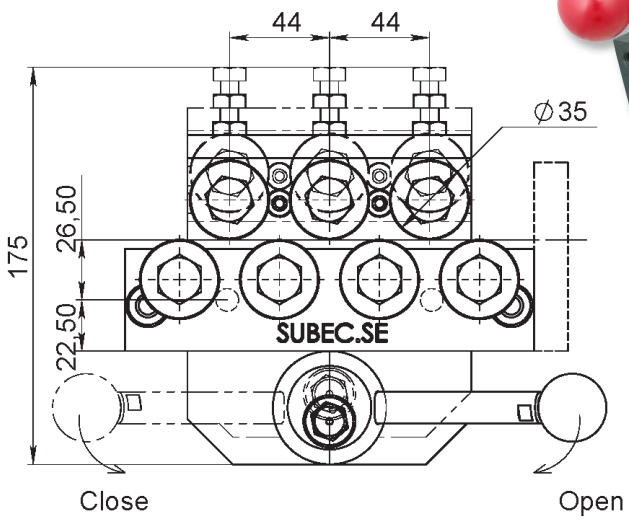



With Pos.Indic.

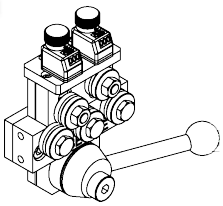

Standard

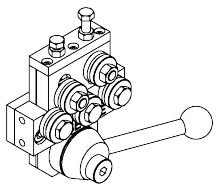

Double

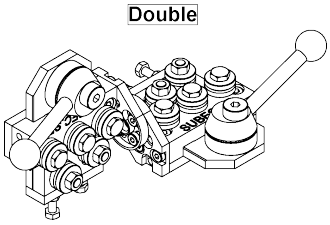

With SD35 Straightening rollers (3-400475-00)

Standard: V-groove, other profiles acc. your specifications

Type	Q5	Q7	Q9	Q11	Q13
L	135	179	223	267	311
E	37,5	37,5	37,5	37,5	37,5
F	60	104	148	192	236
kg		5,5			
Article Single	**02411A***	**00578***	**00678***	**02295**	**00710**
Article Double	**06082A***	**00579***	**01116**	**03170**	**03780**

Drawing No. 3-300125-00

* Stock item

Subec AB **Hesselmans Torg 5** **SE- 131 54 Nacka** **Sweden** **Phone: +46-8-88 46 33** **Email: info@subec.se** **Web: www.subec.se**

Copyright © 2026 Subec

WIRE STRAIGHTENER S35-HW-5

Product range: Ø 2,0-4,5mm

HW = Open/close by handwheel

Single Unit
Article: 01037*
Weight: 4,1kg

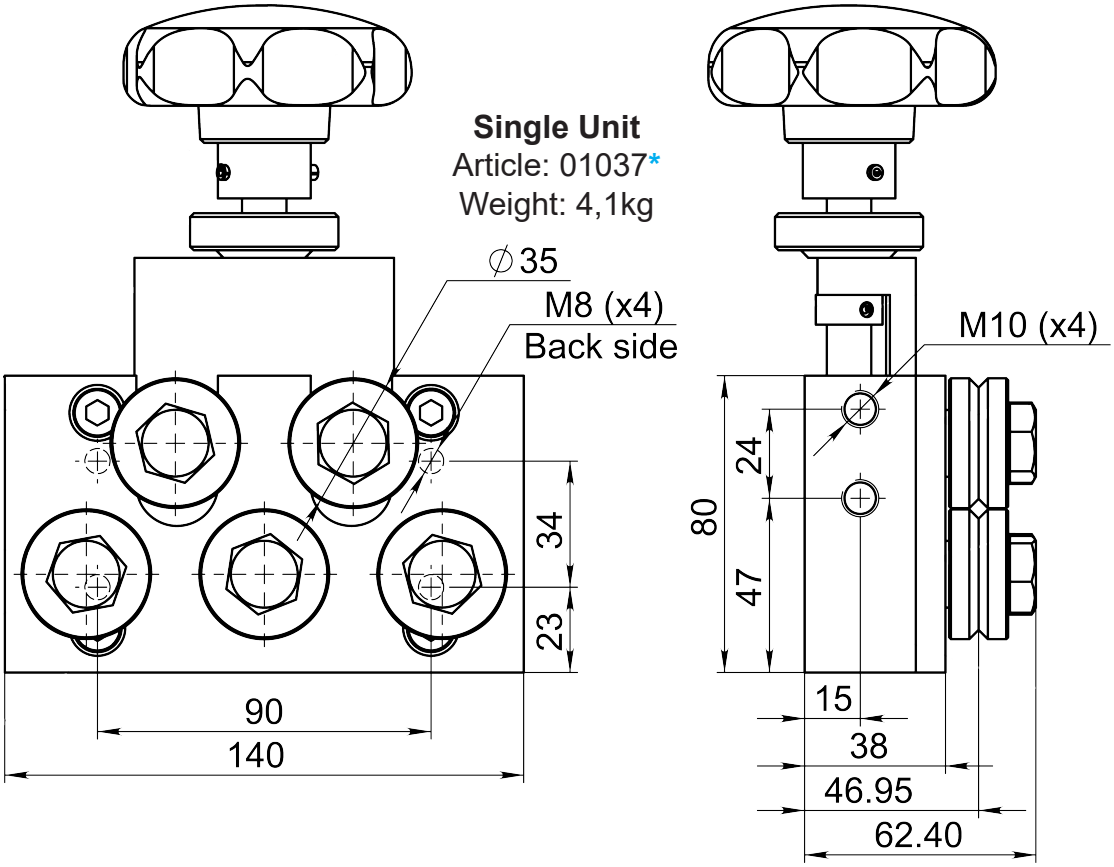

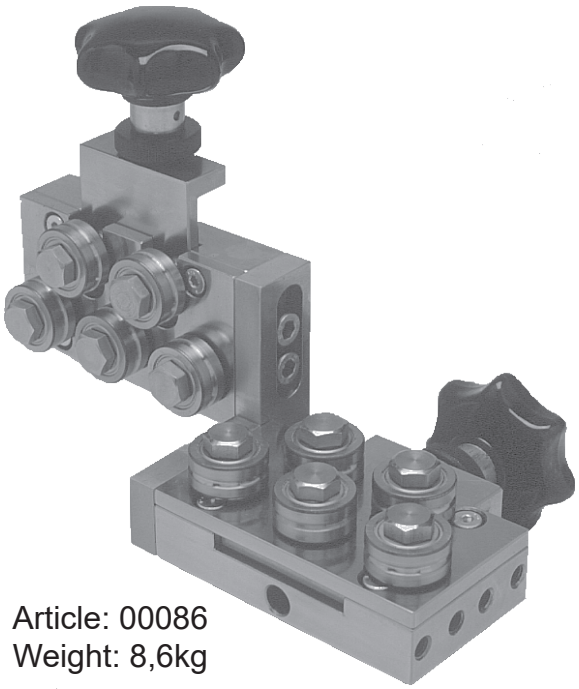

Article: 00086
Weight: 8,6kg

With SD Straightening rollers



Article: 12069
With Position Indicator

Drawing No. 3-400343-00

* Stock item

Subec AB **Hesselmans Torg 5** **SE- 131 54 Nacka** **Sweden** **Phone: +46-8-88 46 33** **Email: info@subec.se** **Web: www.subec.se**

Copyright © 2026 Subec

WIRE STRAIGHTENER S35-HW-SY-5

Product range: Ø 2,0-4,5mm

HW-SY = Open/close symmetric to centreline by handwheel

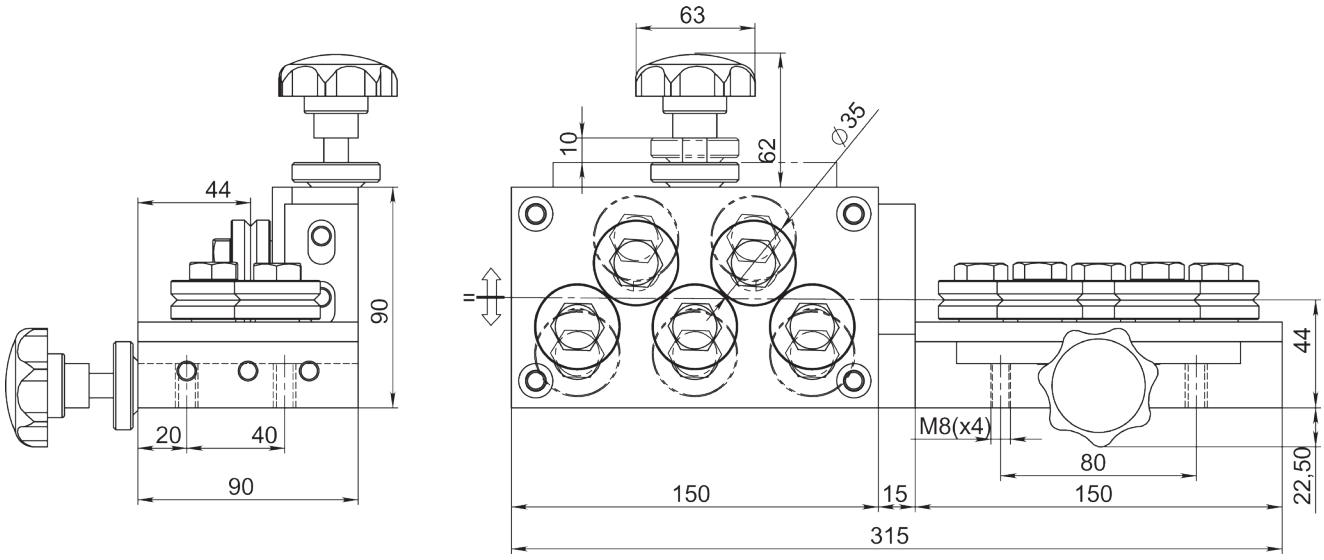



Article: 00096*
Weight: 8,7kg

Single Unit
Article: 01210

With SD Straightening rollers

Drawing No. 3-400361-00

* Stock item

Subec AB **Hesselmans Torg 5** **SE- 131 54 Nacka** **Sweden** **Phone: +46-8-88 46 33** **Email: info@subec.se** **Web: www.subec.se**

Copyright © 2026 Subec

HELIX STRAIGHTENER S35-SPI-3

Product range: Ø 2,0-4,5mm

SPI = Spiral

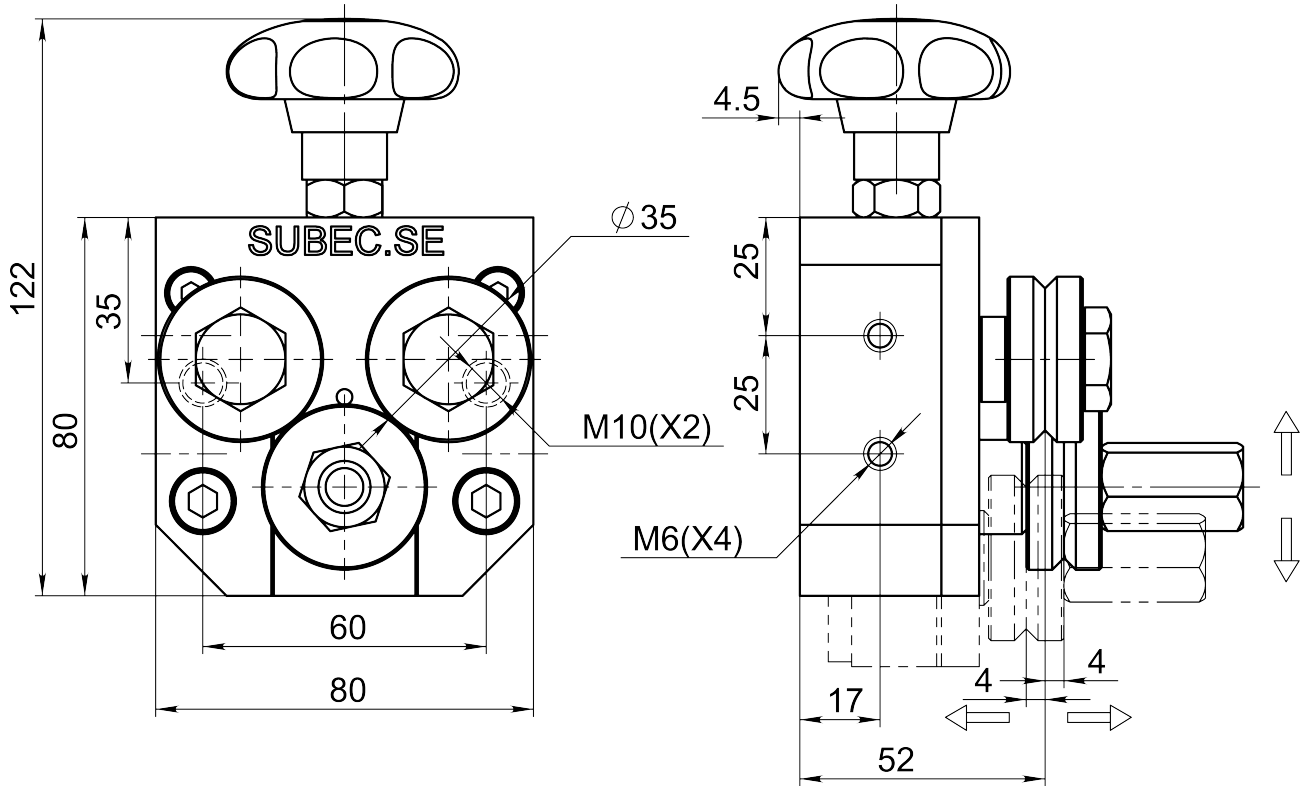



Article: 00666
Weight: 2,2kg

With SD Straightening rollers

Drawing No. 3-400398-00

Subec AB **Hesselmans Torg 5** **SE- 131 54 Nacka** **Sweden** **Phone: +46-8-88 46 33** **Email: info@subec.se** **Web: www.subec.se**

Copyright © 2026 Subec

WIRE STRAIGHTENER SERIES S40-Q

Product range: Ø 3,0-5,0mm

Q = Quick closing by excenter

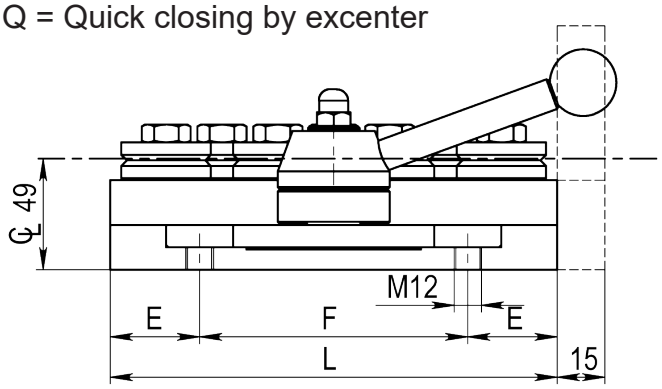

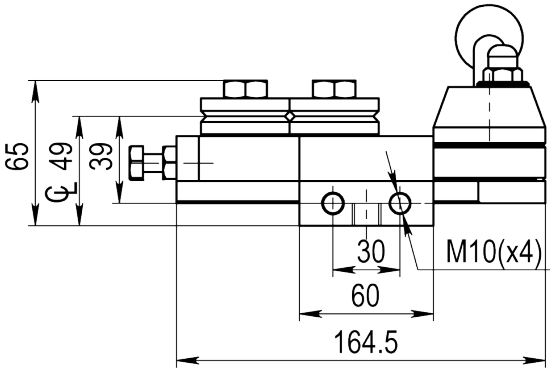

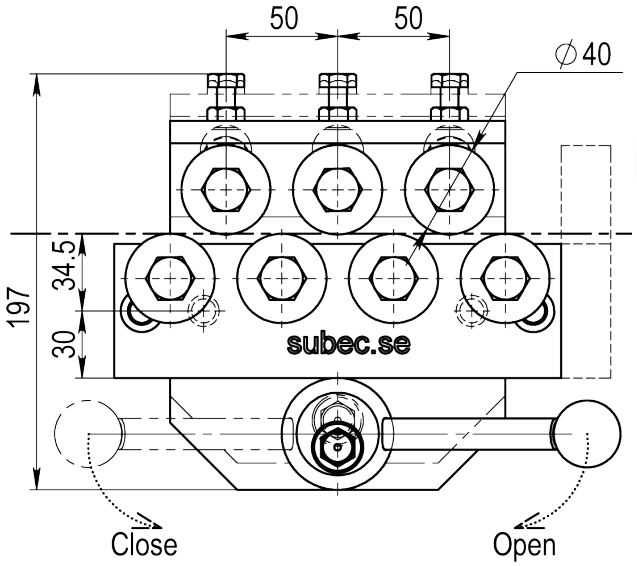

Double System:

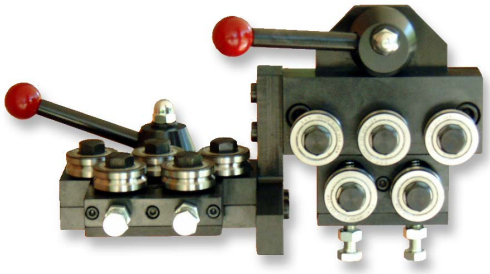

With Pos.Indic.

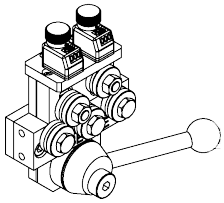

Standard

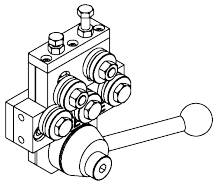

Double

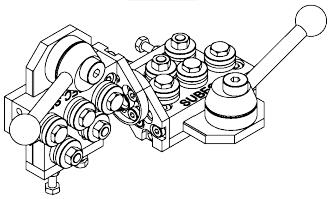

With SD40 Straightening rollers (3-400475-00)
Standard: V-groove, other profiles acc. your specifications

Type	Q5	Q7	Q9	Q11	Q13
					
L	150	200	250	300	350
E	40	40	40	50	65
F	70	120	170	200	220
kg	6	7,5	9	10,5	12
Article Single	**01224***	**00838***	**05705**	**00994**	**05707**
Article Double	**01003**	**00837***	**05706**	**00667**	**05708**

Drawing No. 3-400412-00

* Stock item

Subec AB **Hesselmans Torg 5** **SE- 131 54 Nacka** **Sweden** **Phone: +46-8-88 46 33** **Email: info@subec.se** **Web: www.subec.se**

Copyright © 2026 Subec

WIRE STRAIGHTENER SERIES S40-Q-AA

Product range: Ø 3,0-5,0mm

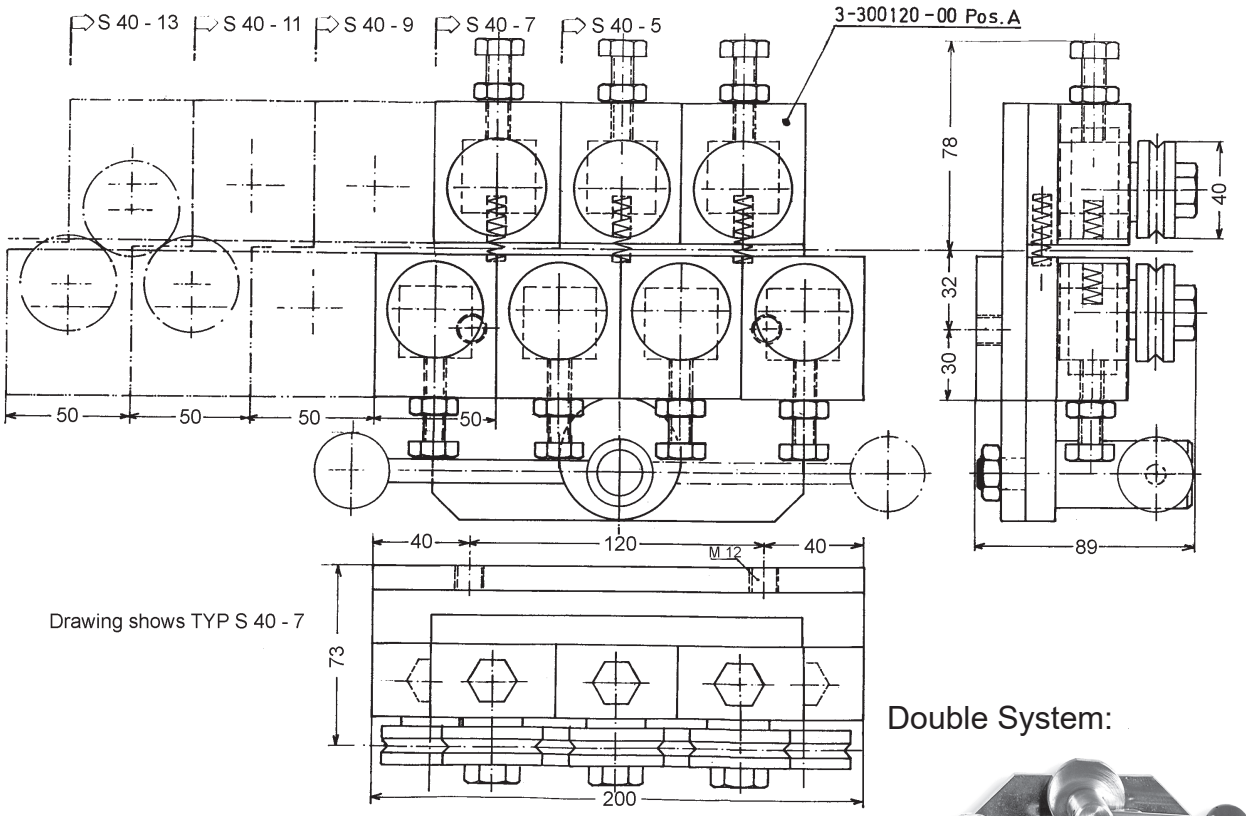

Drawing shows TYP S 40 - 7

Double System:

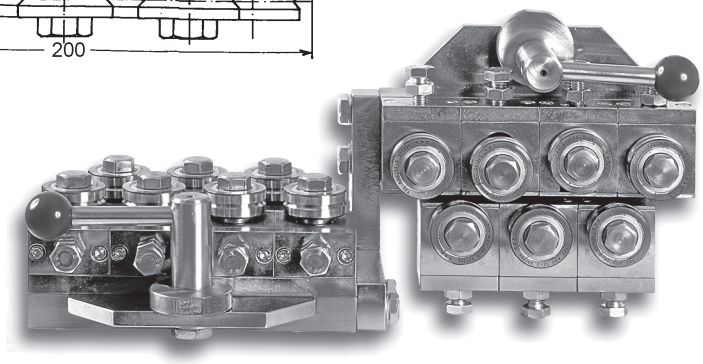

With SD40 Straightening rollers (3-400475-00)
Standard: V-groove, other profiles acc. your specifications

Info:
Wire Straightener with quick opening. All rollers are individually adjustable. Useful for spring manufacturers.

Option:
Other configurations with a different amount of rollers are available.
Such as: 5, 7, 9, 11 or 13

More information on request

Drawing No. 3-200020-00

Subec AB **Hesselmans Torg 5** **SE- 131 54 Nacka** **Sweden** **Phone: +46-8-88 46 33** **Email: info@subec.se** **Web: www.subec.se**

Copyright © 2026 Subec

WIRE STRAIGHTENER SERIES S40-AA

Product range: Ø 3,0-5,0mm

AA = All rollers individually adjustable

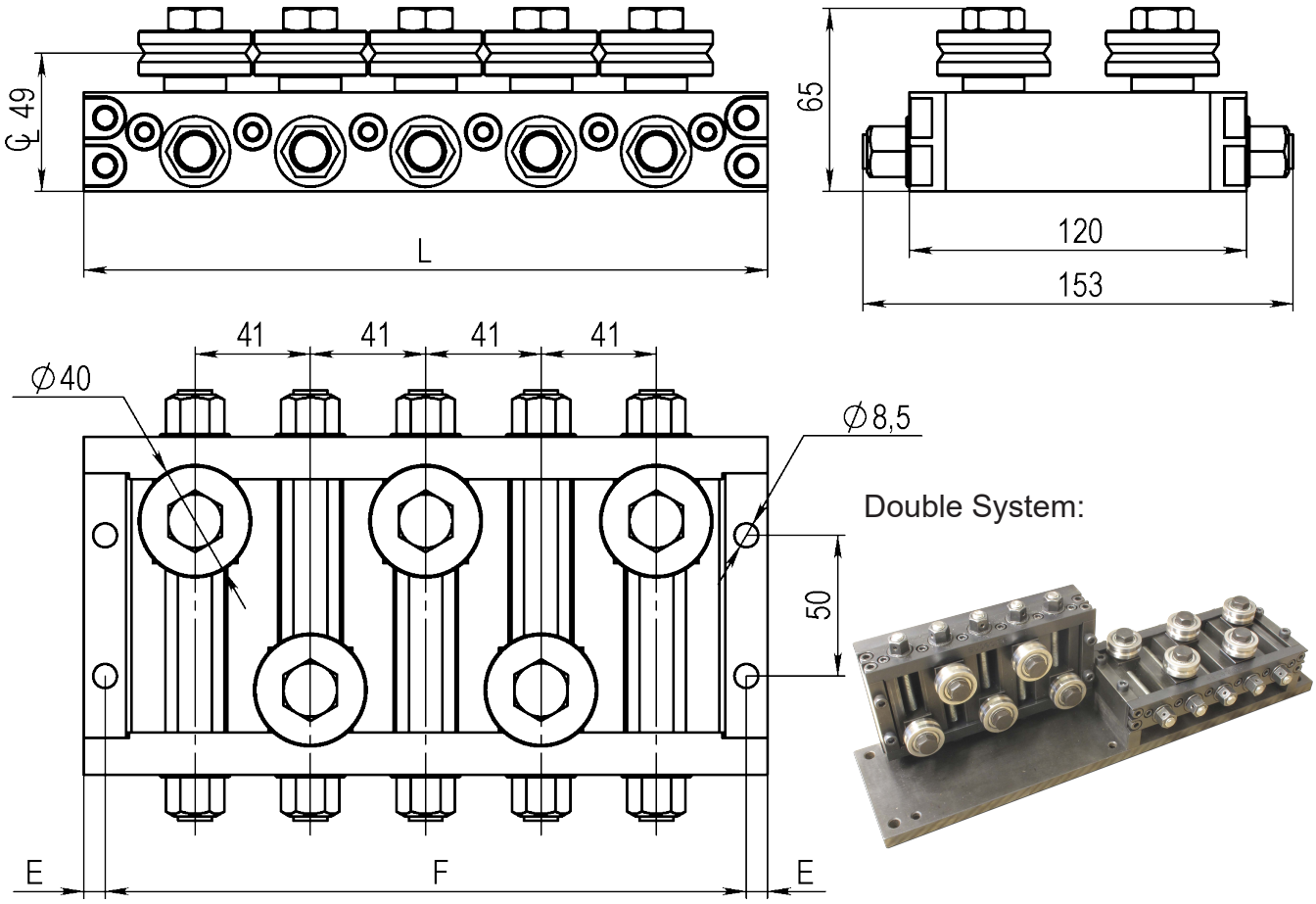

Double System:

With SD40 Straightening rollers (3-400475-00)
Standard: V-groove, other profiles acc. your specifications

Type	AA5	AA7	AA9	AA11	AA13
L	243	325	407	489	571
E	7,5	7,5	7,5	7,5	7,5
F	228	310	392	474	556
kg					
Article Single	**00679**	**00680**	**00681**	**00682**	**00683**
Article Double	**07170***	**00703***			

Drawing No. 3-200022-00

* Stock item

Subec AB **Hesselmans Torg 5** **SE- 131 54 Nacka** **Sweden** **Phone: +46-8-88 46 33** **Email: info@subec.se** **Web: www.subec.se**

Copyright © 2026 Subec

WIRE STRAIGHTENER SERIES S40-SY

Product range: Ø 3,0-5,0mm

SY = With symmetrical open/close of upper and lower row of rollers to wire centreline.

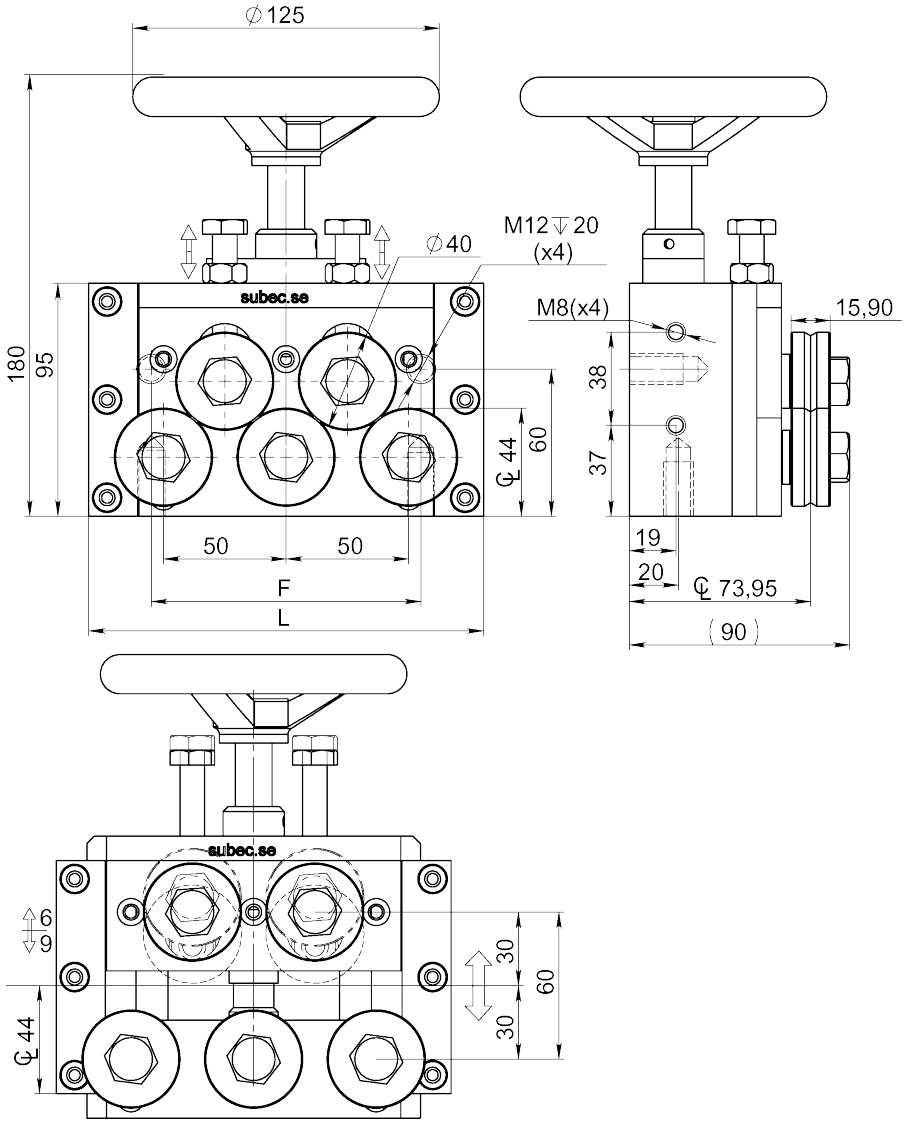

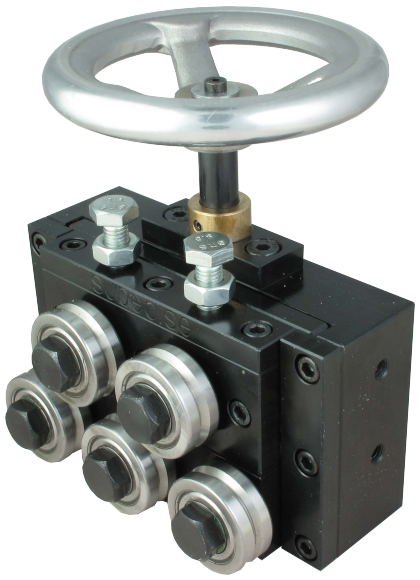

With SD40 Straightening rollers (3-400475-00)

Standard: V-groove, other profiles acc. your specifications

Type	SY5	SY7	SY9	SY11	SY13
					
L	161	215	265	315	365
F	110	160	160	160	160
kg	7	8	10	11,5	12,5
Article Single	**06742***			**02693**	
Article Double	**01941**			**00200**	

Drawing No. 3-400550-00

* Stock item

Subec AB **Hesselmans Torg 5** **SE- 131 54 Nacka** **Sweden** **Phone: +46-8-88 46 33** **Email: info@subec.se** **Web: www.subec.se**

Copyright © 2026 Subec

WIRE STRAIGHTENER S40-TA-5

Product range: Ø 3,0-5,0mm

TA = Top row rollers adjustable

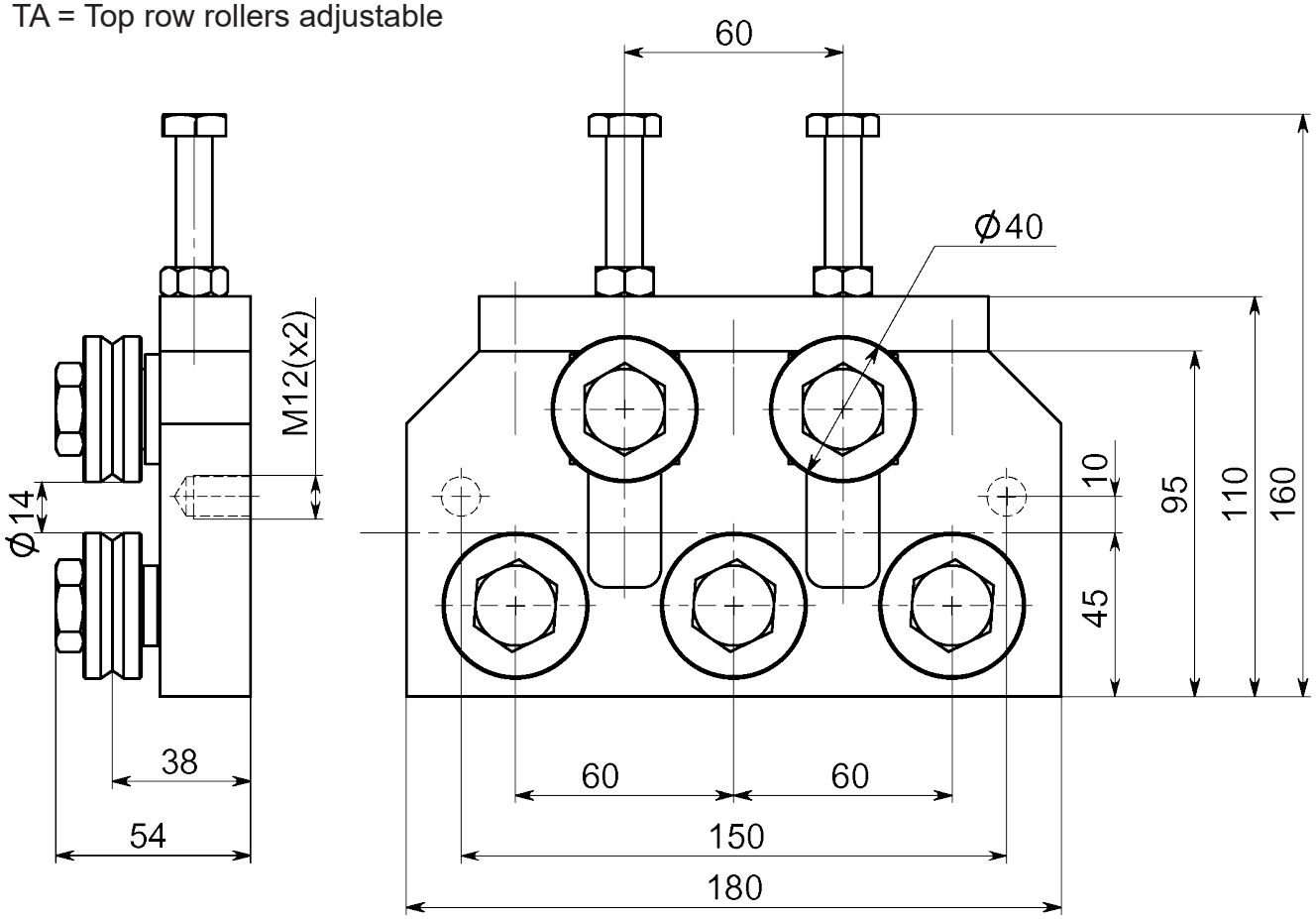

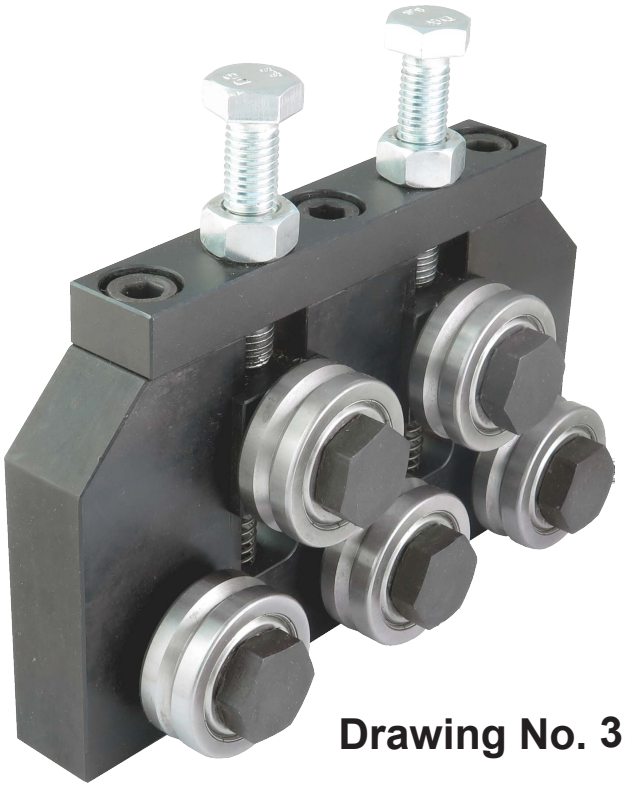

Article: 4596*
Weight: 4,0kg

Drawing No. 3-400743-00

* Stock item

Subec AB **Hesselmans Torg 5** **SE- 131 54 Nacka** **Sweden** **Phone: +46-8-88 46 33** **Email: info@subec.se** **Web: www.subec.se**

Copyright © 2026 Subec

WIRE STRAIGHTENER S40-TA-7

Product range: Ø 3,0-5,0mm

TA = Top row rollers adjustable

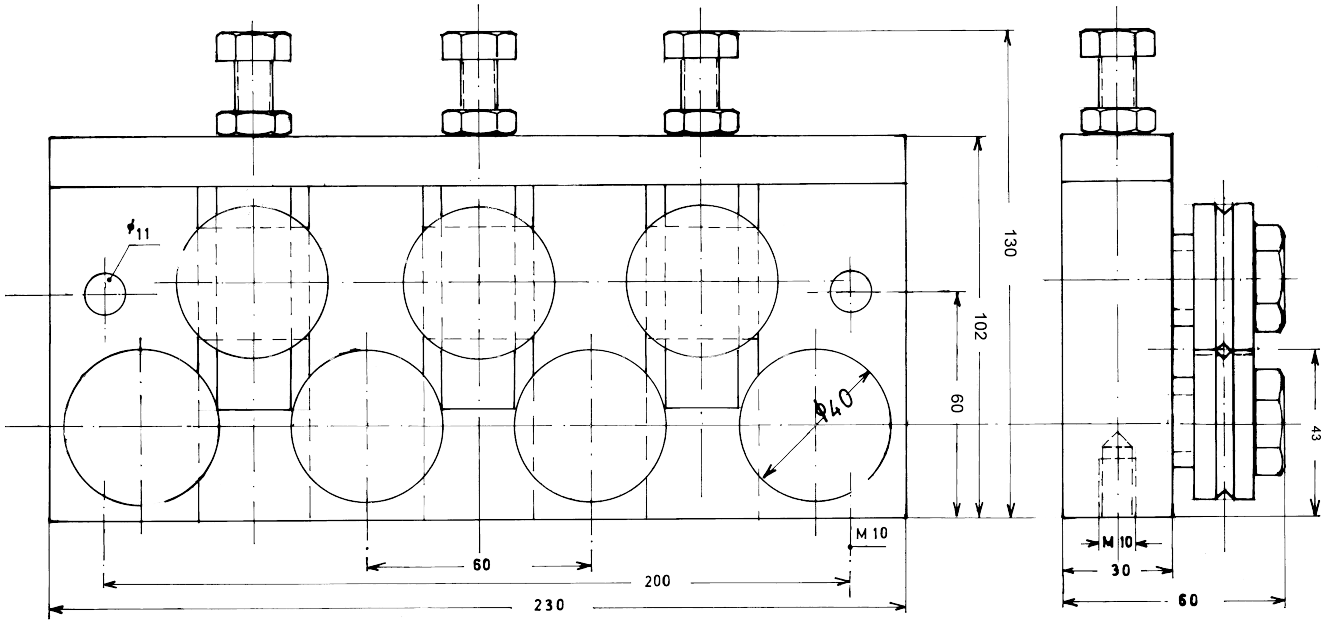



Article: 00734*
Weight: 5,7kg

With SD Straightening rollers

Drawing No. 3-300129-00

* Stock item

Subec AB **Hesselmans Torg 5** **SE- 131 54 Nacka** **Sweden** **Phone: +46-8-88 46 33** **Email: info@subec.se** **Web: www.subec.se**

Copyright © 2026 Subec

WIRE STRAIGHTENER S45-TA-3

Product range: Ø 5,0-7,0mm

TA = Top row rollers adjustable

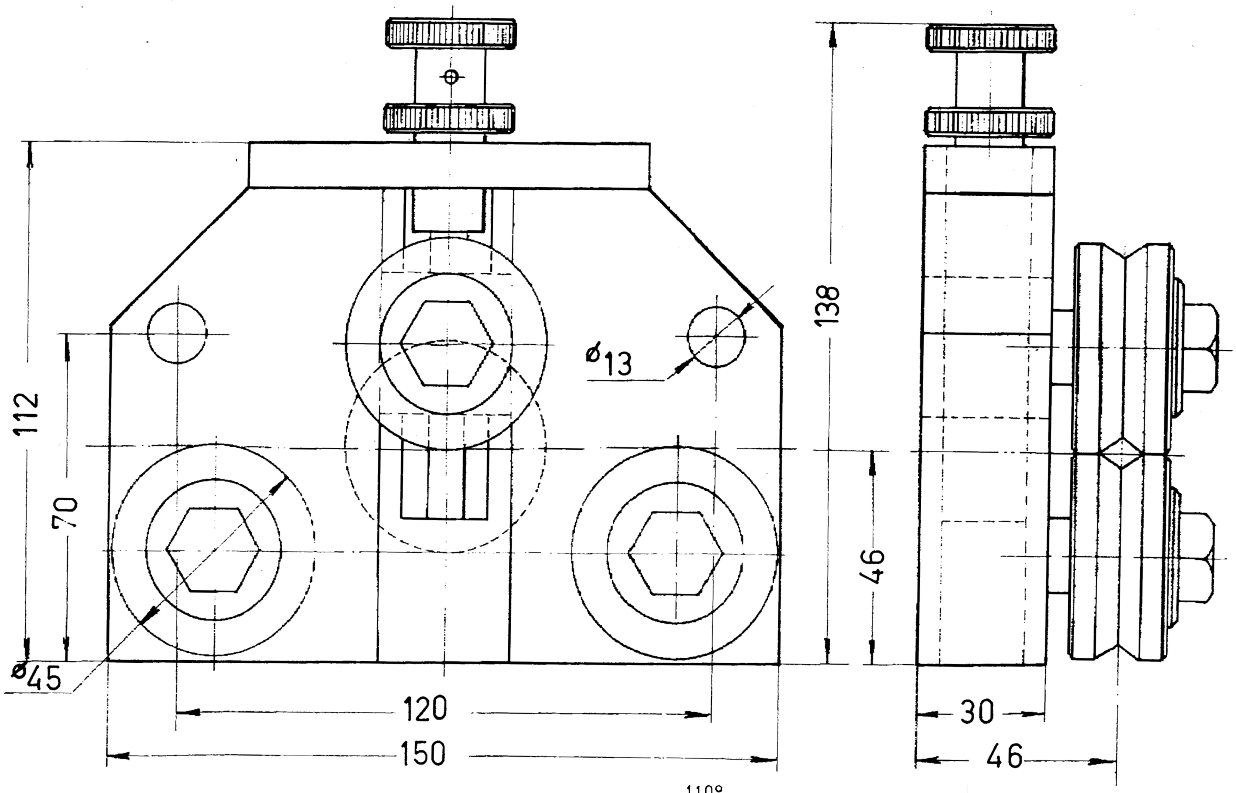

Article: 00685*
Weight: 3,99kg

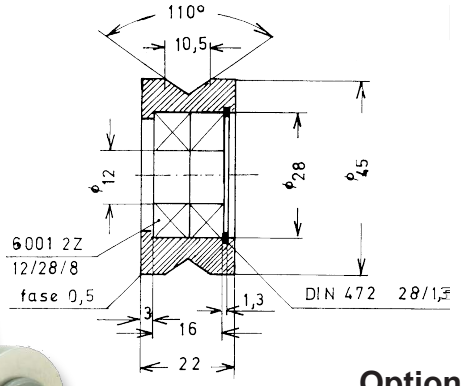

Article: 01320
Weight: 0,175kg



With SL Straightening rollers

Option: Rollers according to customers' request



Drawing No. 3-400367-00

* Stock item

Subec AB **Hesselmans Torg 5** **SE- 131 54 Nacka** **Sweden** **Phone: +46-8-88 46 33** **Email: info@subec.se** **Web: www.subec.se**

Copyright © 2026 Subec

WIRE STRAIGHTENER S47-XSL-5

Product range: Ø 3,0-5,0mm

XSL = Extra Slim Line

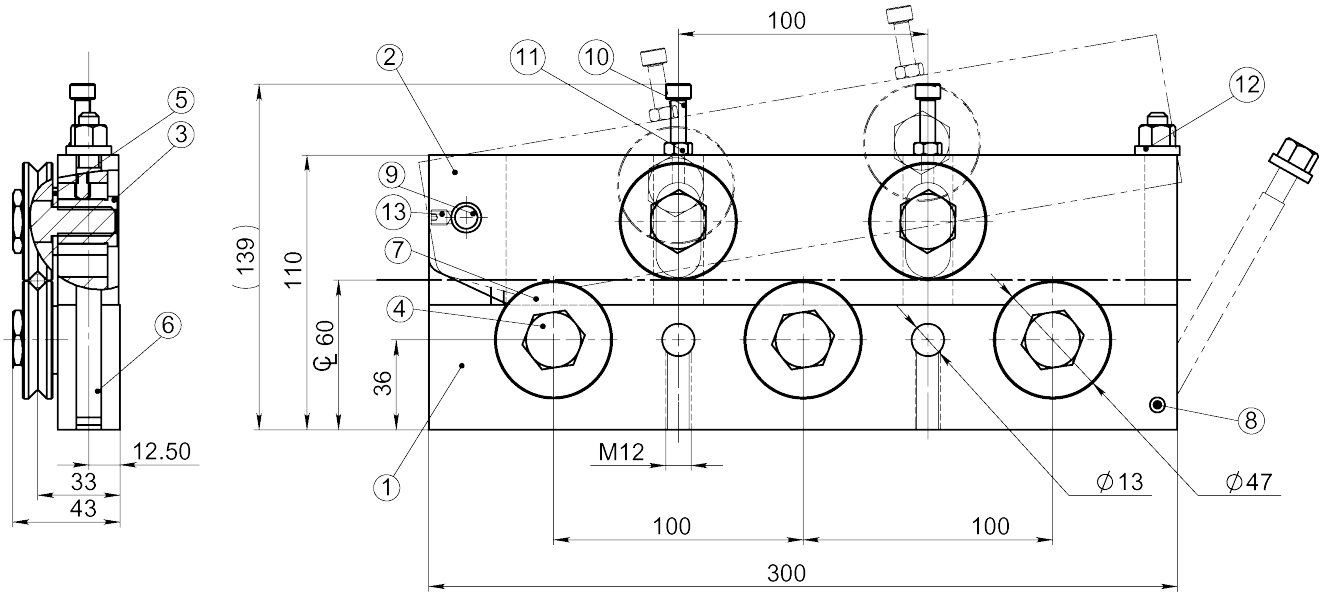



Article: 04904
Weight: 6,7kg

Drawing No. 3-400758-00

Subec AB **Hesselmans Torg 5** **SE- 131 54 Nacka** **Sweden** **Phone: +46-8-88 46 33** **Email: info@subec.se** **Web: www.subec.se**

Copyright © 2026 Subec

WIRE STRAIGHTENER SERIES S52-Q

Product range: Ø 6,0-9,5mm

Q = Quick closing by excenter

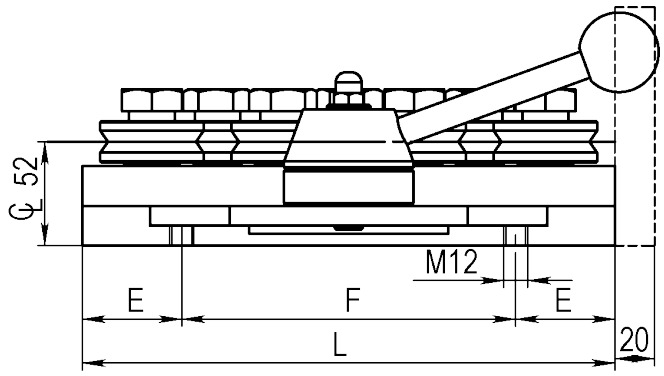

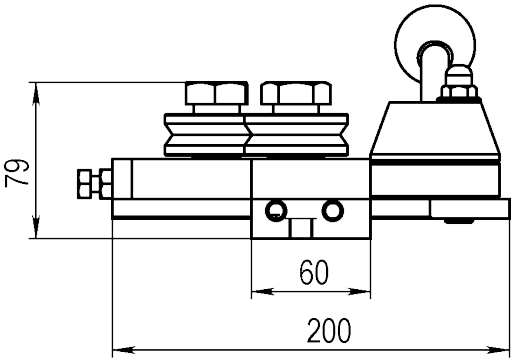

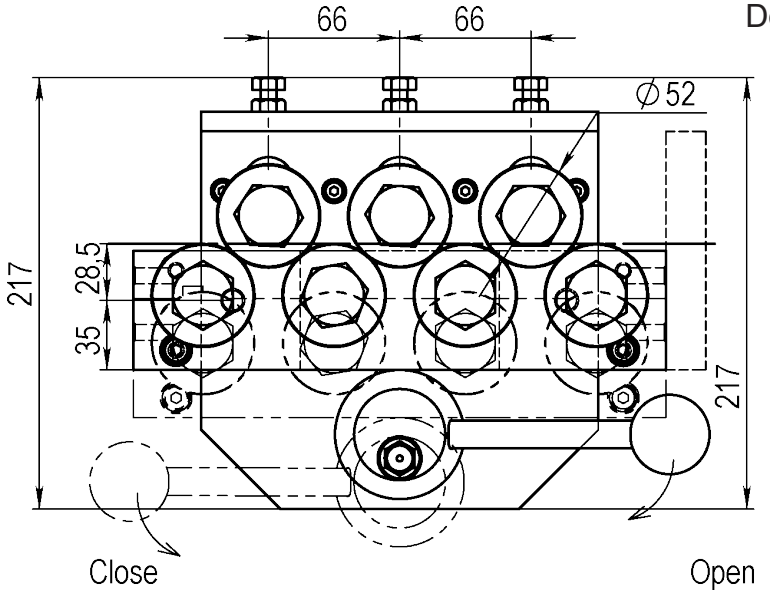

Double System:

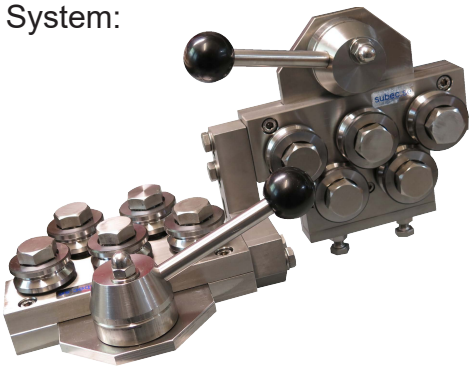

With hydraulic open/close



Article: 05191

With SD52 Straightening rollers (3-400475-00)
Standard: V-groove, other profiles acc. your specifications

Type	Q5	Q7	Q9	Q11	Q13
L	202	268	334	400	466
E	50	50	50	50	50
F	102	168	234	300	366
kg	8,5	11,75			
Article Single	**01467***	**00091***			
Article Double	**01337**	**00088**			

Drawing No. 3-400470-00

* Stock item

Subec AB **Hesselmans Torg 5** **SE- 131 54 Nacka** **Sweden** **Phone: +46-8-88 46 33** **Email: info@subec.se** **Web: www.subec.se**

Copyright © 2026 Subec

WIRE STRAIGHTENER SERIES S52-AA

AA = All rollers individually adjustable

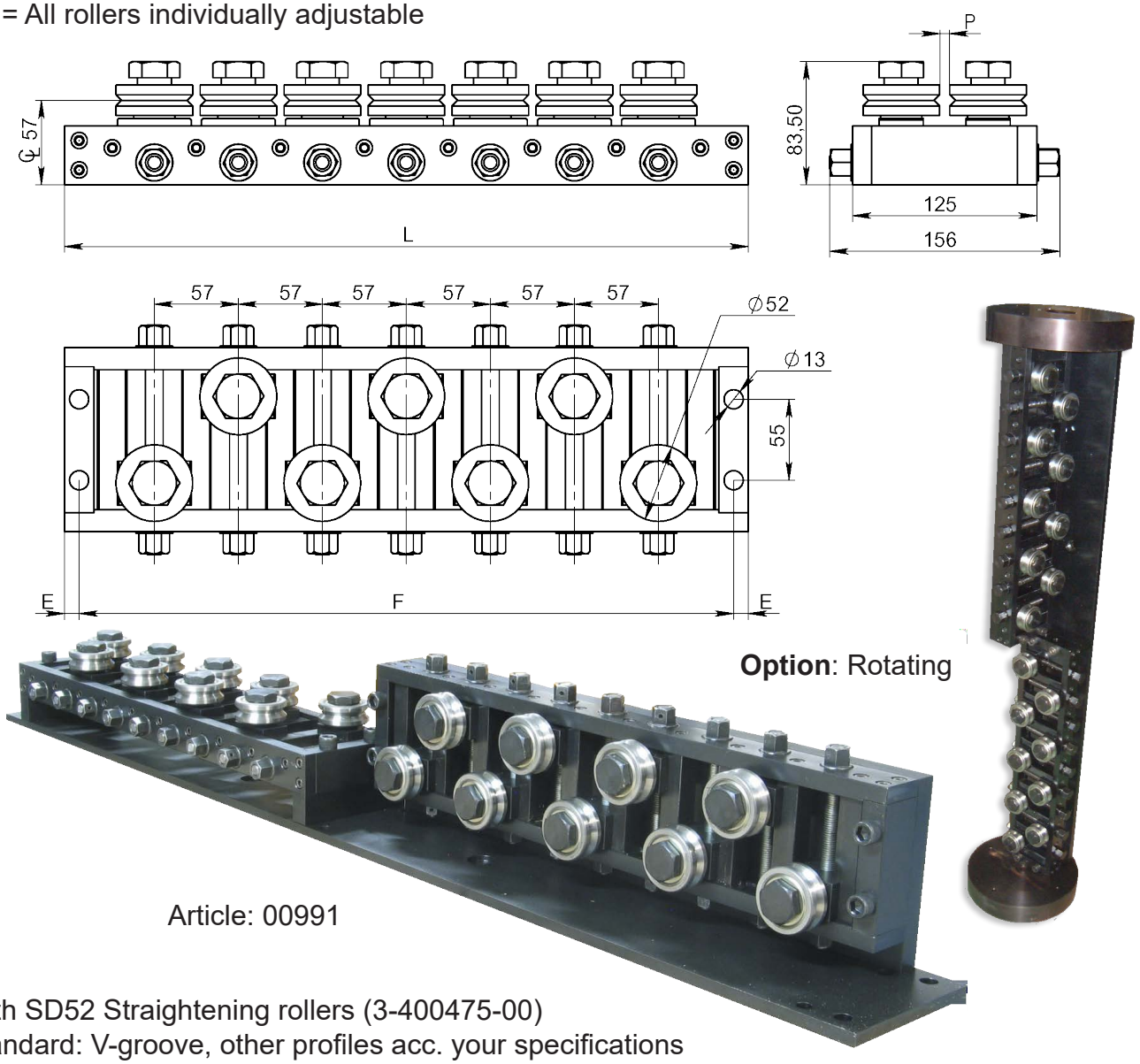

Option: Rotating

Article: 00991

With SD52 Straightening rollers (3-400475-00)
Standard: V-groove, other profiles acc. your specifications

Type	AA5	AA7	AA9	AA11	AA13	
L	350	464	578	692	806	
E	10	10	10	10	10	
F	330	444	558	672	786	
P	13	13	13	13	13	20
kg	11	14	17	20	23	
Article Single	**00843***	**00588**	**08315***	**10983**	**9486**	**11152**
Article Double	**00783**	**00586**	**00991**	**04564**		

Drawing No. 3-400418-00

* Stock item

Subec AB **Hesselmans Torg 5** **SE- 131 54 Nacka** **Sweden** **Phone: +46-8-88 46 33** **Email: info@subec.se** **Web: www.subec.se**

Copyright © 2026 Subec

WIRE STRAIGHTENER S52-SY-5

Product range: Ø 6,0-9,5mm

SY = With symmetrical open/close of upper and lower row of rollers to wire centreline.

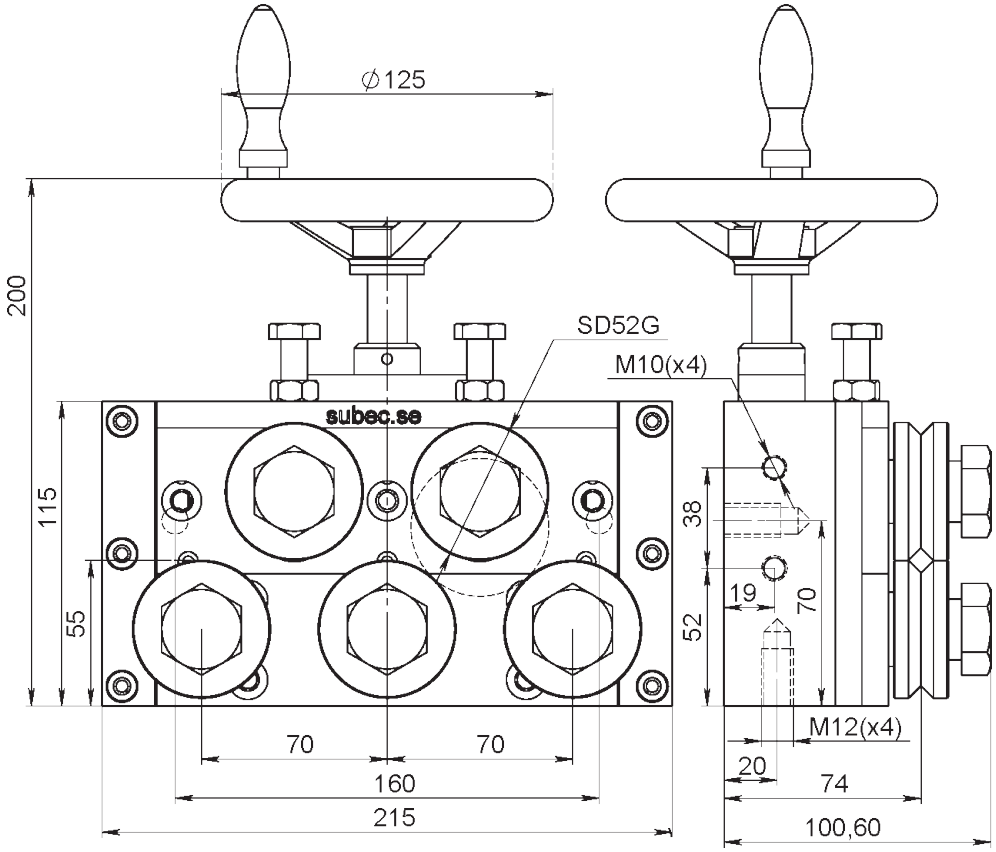

Article: 7296*
Weight: 13kg



Article: 07256
Option: With Position Indicator, greas nipple and SL-Rollers



With SD Straightening rollers

Drawing No. 3-400550-00

* Stock item

Subec AB **Hesselmans Torg 5** **SE- 131 54 Nacka** **Sweden** **Phone: +46-8-88 46 33** **Email: info@subec.se** **Web: www.subec.se**

Copyright © 2026 Subec

WIRE STRAIGHTENER S52-TA-9

Product range: Ø 6,0-9,5mm

TA = Top row rollers adjustable

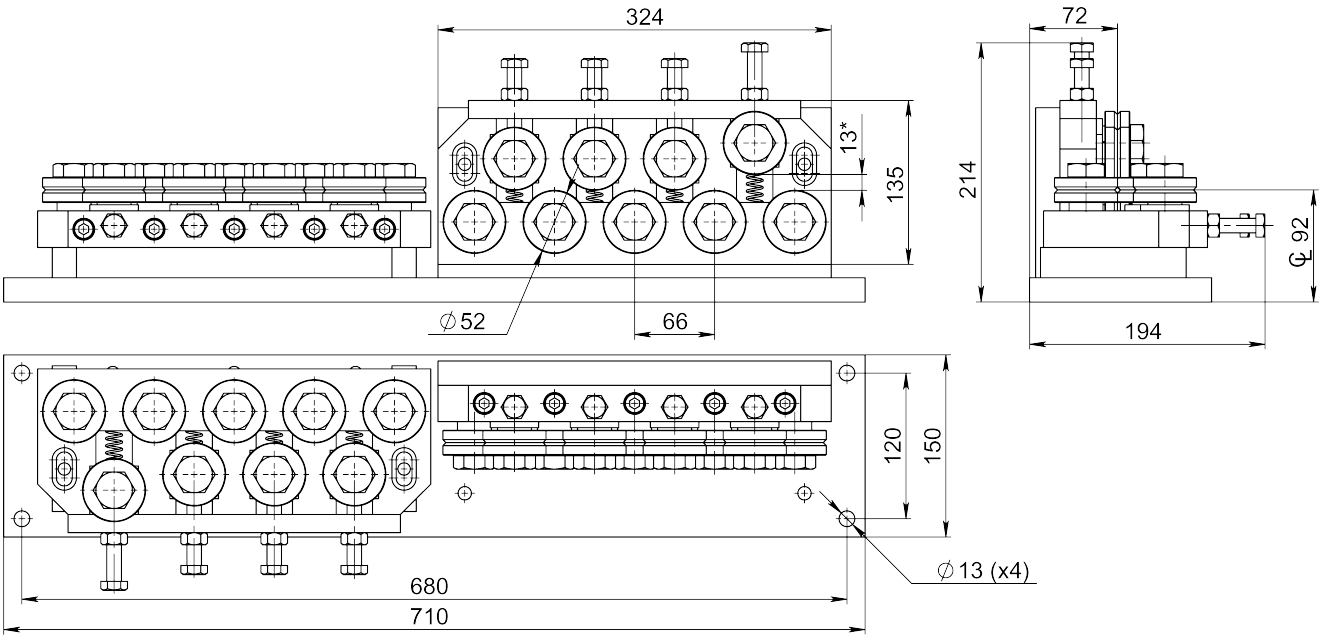

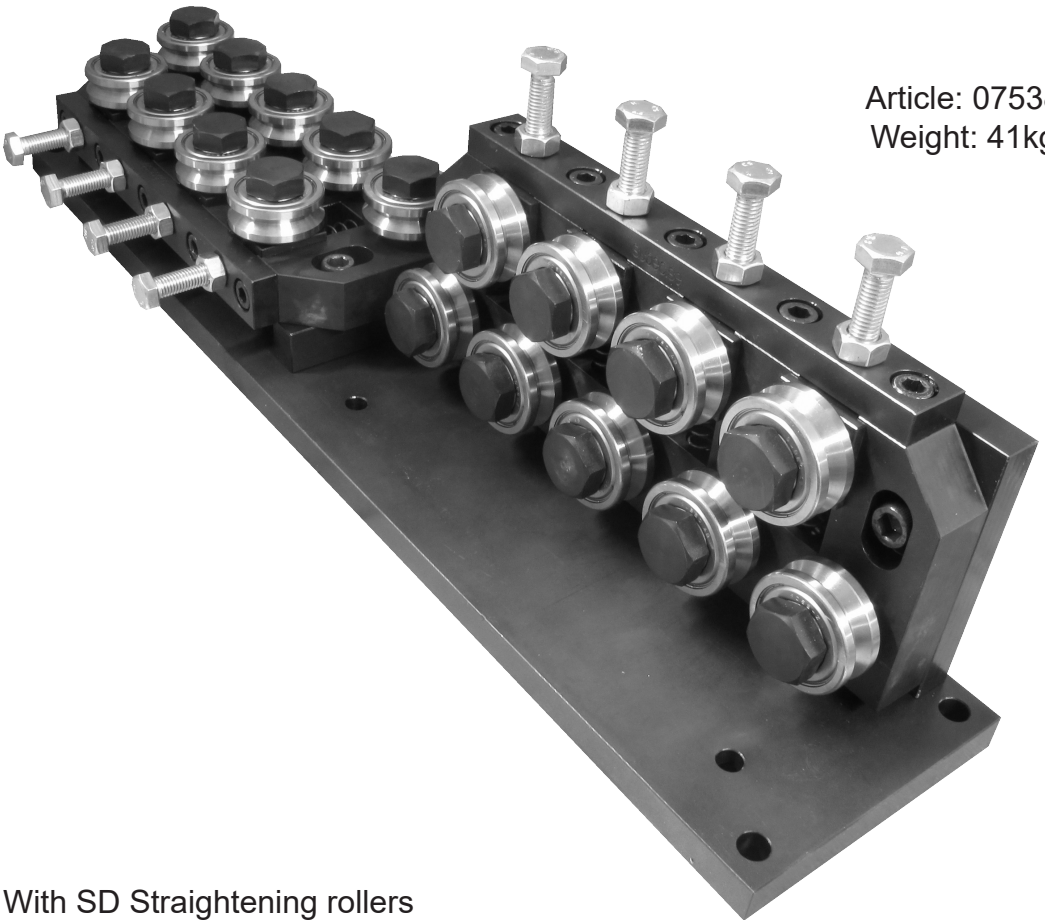

Article: 07538
Weight: 41kg

With SD Straightening rollers

Drawing No. 3-400944-00

Subec AB **Hesselmans Torg 5** **SE- 131 54 Nacka** **Sweden** **Phone: +46-8-88 46 33** **Email: info@subec.se** **Web: www.subec.se**

Copyright © 2026 Subec

WIRE STRAIGHTENER S52-Q-AA

Product range: Ø 6,0-9,5mm

Q = Quick closing by excenter
AA = All rollers individually adjustable

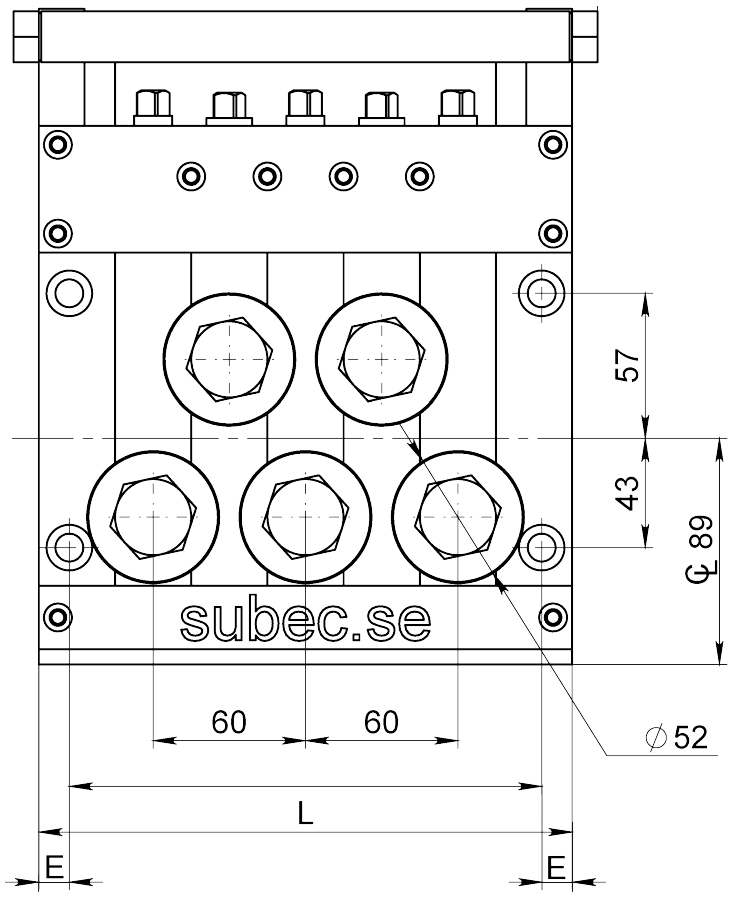

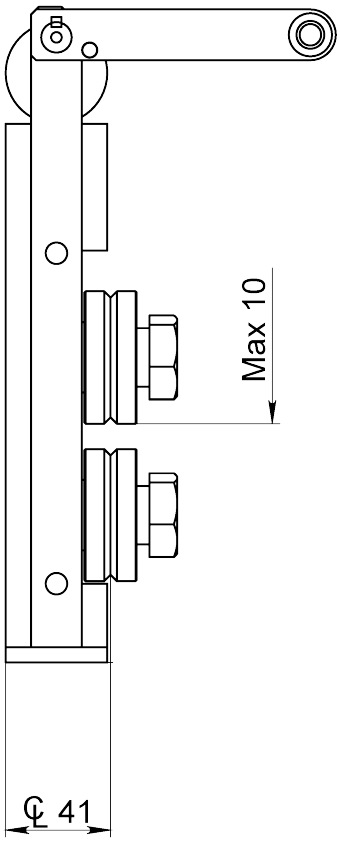

Type	Q5	Q7
L	210	270
E	186	246
F	12	12
kg		
Article Single	**11710**	**1051**
Article Double	**11711**	**9171**
Article Double (With Baseplate)		**01034**

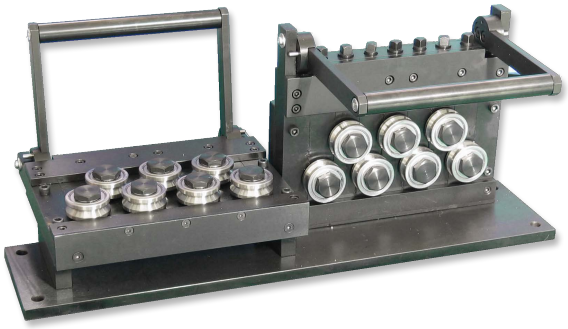

Article: 01034
Weight: 63kg

Drawing No. 3-400447-00

Subec AB **Hesselmans Torg 5** **SE- 131 54 Nacka** **Sweden** **Phone: +46-8-88 46 33** **Email: info@subec.se** **Web: www.subec.se**

Copyright © 2026 Subec

WIRE STRAIGHTENER S52-HW-5

Product range: Ø 6,0-9,5mm

HW = Open/close by handwheel

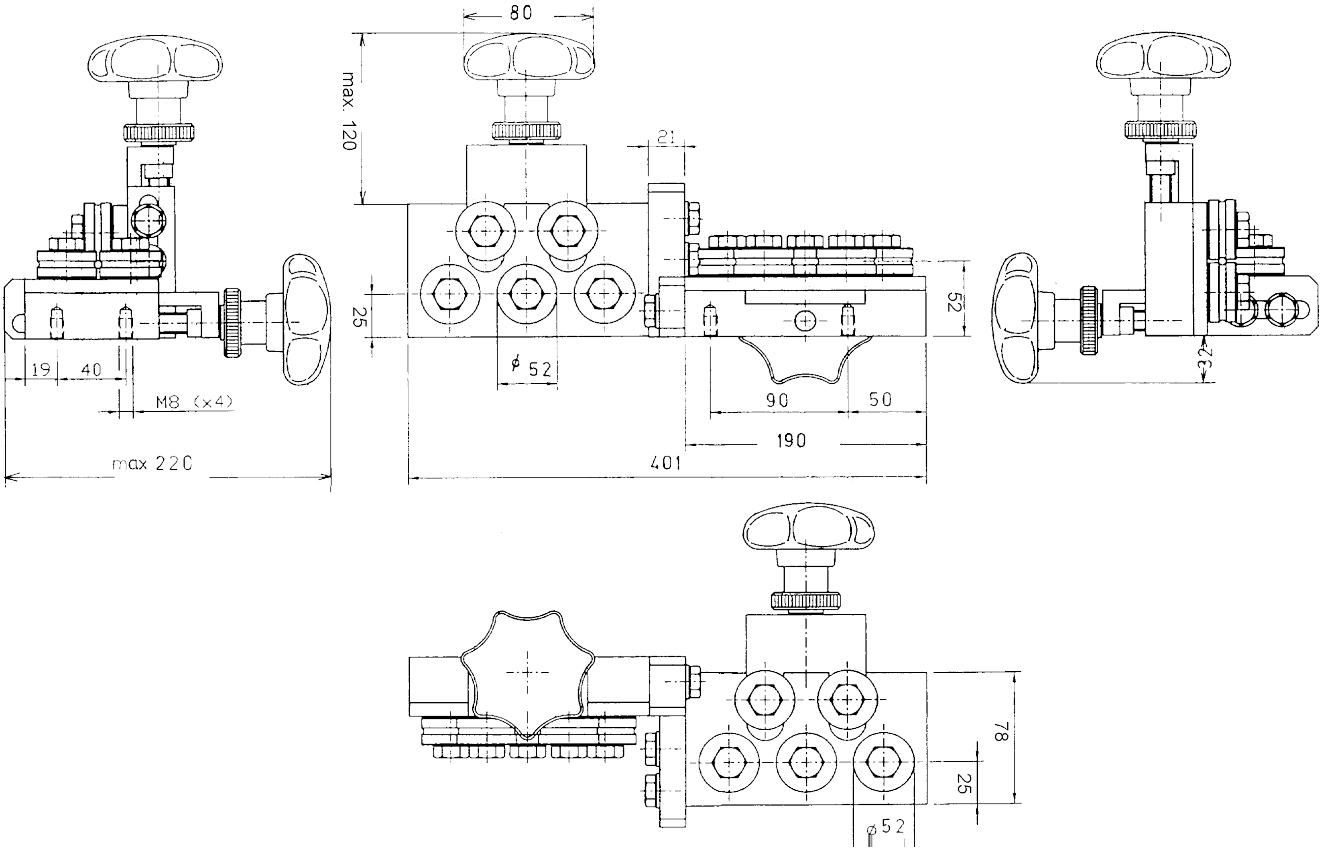

Article: 00780*
Weight: 7,2kg



With SD Straightening rollers

Drawing No. 3-400342-00

* Stock item

Subec AB **Hesselmans Torg 5** **SE- 131 54 Nacka** **Sweden** **Phone: +46-8-88 46 33** **Email: info@subec.se** **Web: www.subec.se**

Copyright © 2026 Subec

WIRE STRAIGHTENER SERIES S62-Q

Product range: Ø 6-10,5mm

Q = Quick closing by excenter

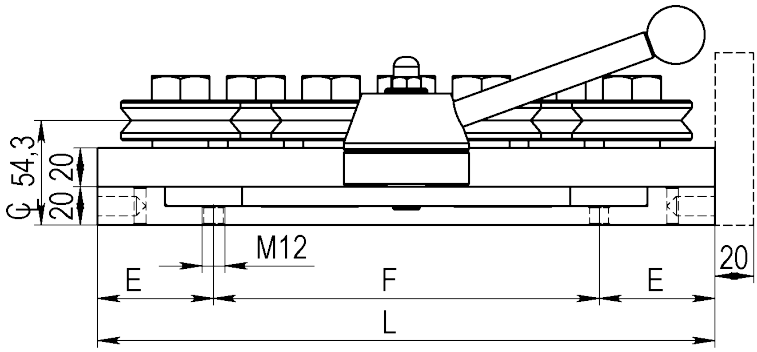

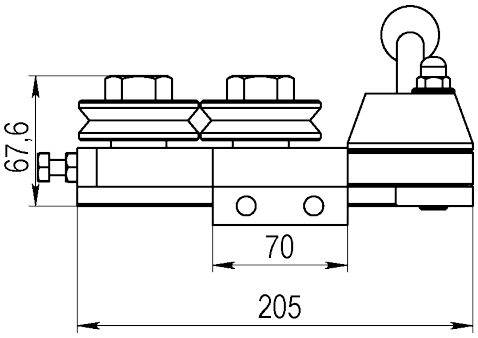

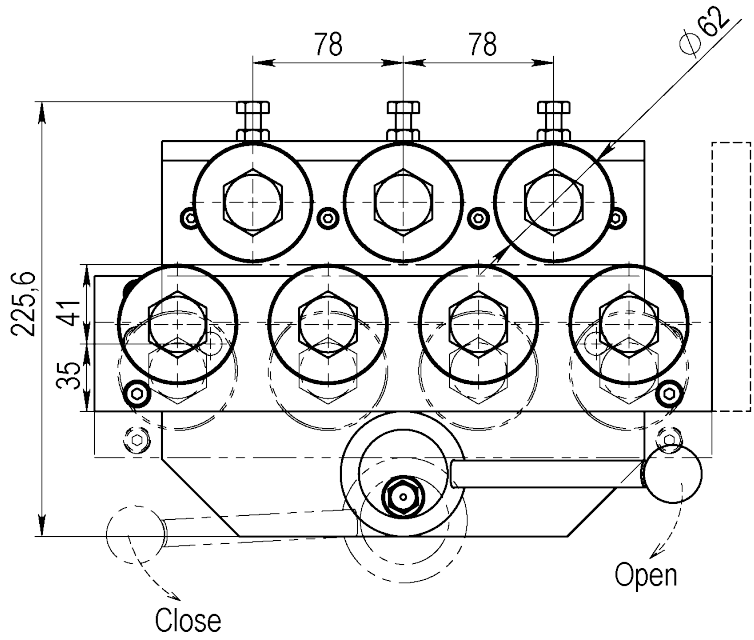



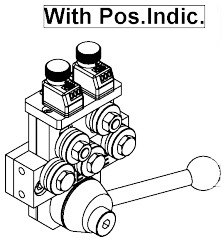

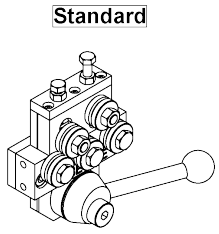

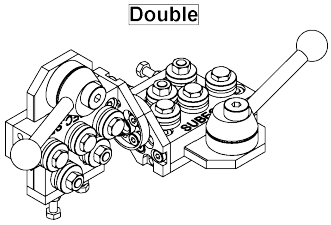

With SD62 Straightening rollers (3-400475-00)
Standard: V-groove, other profiles acc. your specifications

Type	Q5	Q7	Q9	Q11	Q13
L	234	320	398	476	554
E	52	60	60	60	60
F	130	200	278	356	434
kg	12,3	15,9			
Article Single	**01063**	**04075***			
Article Double	**04706**	**01591**			

Drawing No. 3-400355-00

* Stock item

Subec AB **Hesselmans Torg 5** **SE- 131 54 Nacka** **Sweden** **Phone: +46-8-88 46 33** **Email: info@subec.se** **Web: www.subec.se**

Copyright © 2026 Subec

WIRE STRAIGHTENER SERIES S62-AA

Product range: Ø 6-10,5mm

AA = All rollers individually adjustable

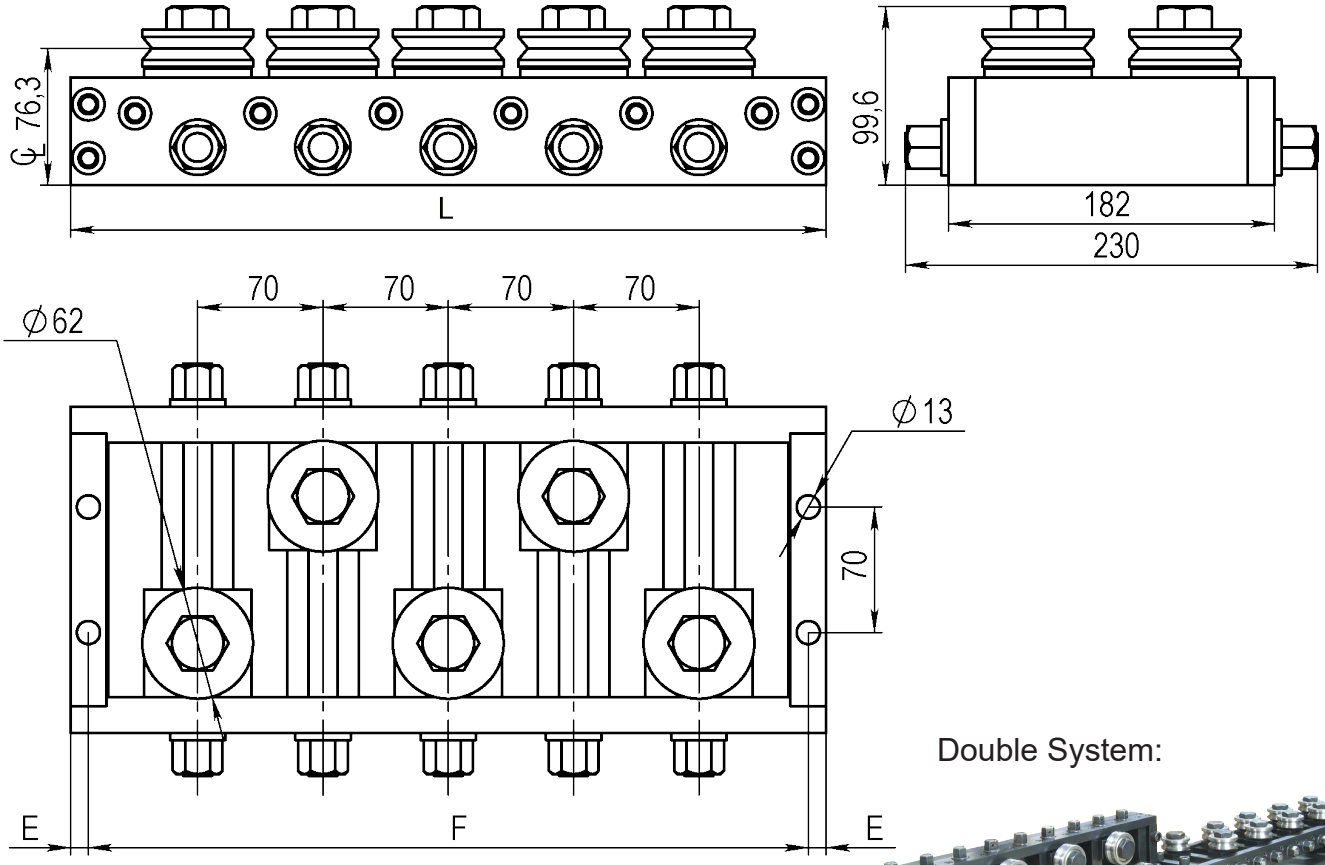

Double System:



With SD62 Straightening rollers (3-400475-00)
Standard: V-groove, other profiles acc. your specifications

Type	AA5	AA7	AA9	AA11	AA13
L	422	562	702	842	982
E	10	10	10	10	10
F	402	542	682	822	962
kg					
Article Single	**06537**				
Article Double	**06538**				

Drawing No. 3-400864-00

Subec AB **Hesselmans Torg 5** **SE- 131 54 Nacka** **Sweden** **Phone: +46-8-88 46 33** **Email: info@subec.se** **Web: www.subec.se**

Copyright © 2026 Subec

WIRE STRAIGHTENER S62-SY-5

Product range: Ø 6-10,5mm

SY = With symmetrical open/close of upper and lower row of rollers to wire centreline.

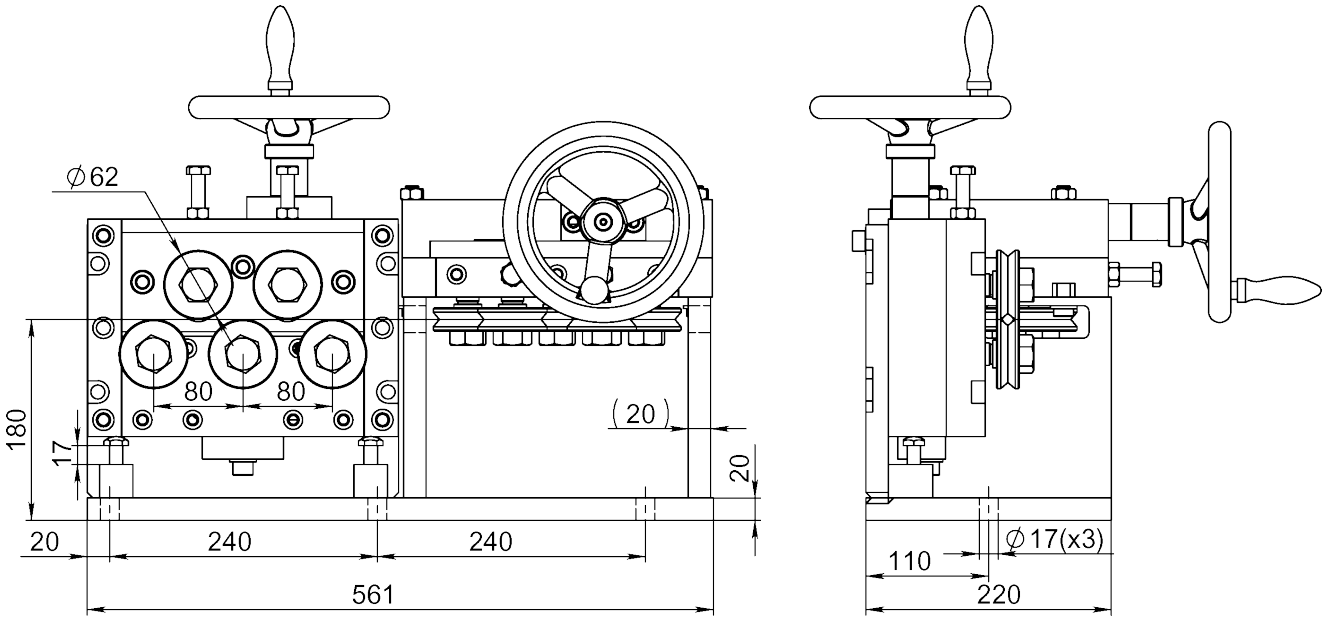

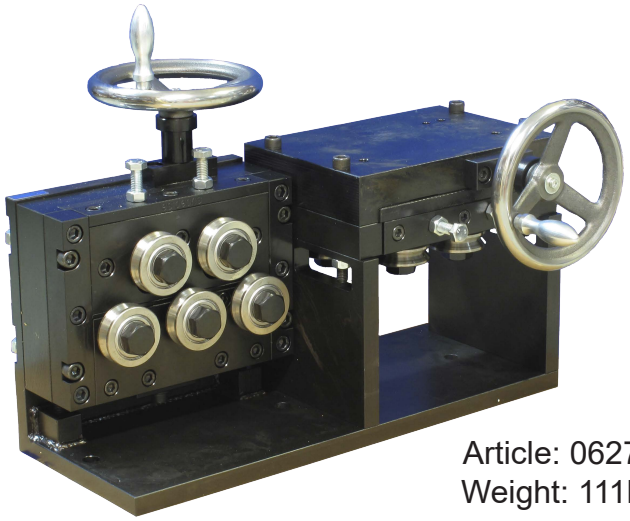

Article: 06272
Weight: 111kg

With Drive Unit 6280:

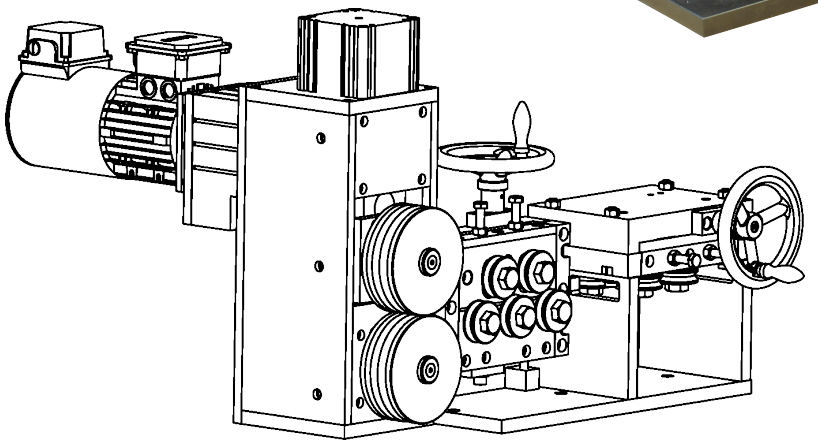

With SD Straightening rollers

Drawing No. 3-400593-00

Subec AB **Hesselmans Torg 5** **SE- 131 54 Nacka** **Sweden** **Phone: +46-8-88 46 33** **Email: info@subec.se** **Web: www.subec.se**

Copyright © 2026 Subec

WIRE STRAIGHTENER S62-Q-AA-3

Product range: Ø 6-10,5mm

Q = Quick closing by excenter
AA = All rollers individually adjustable

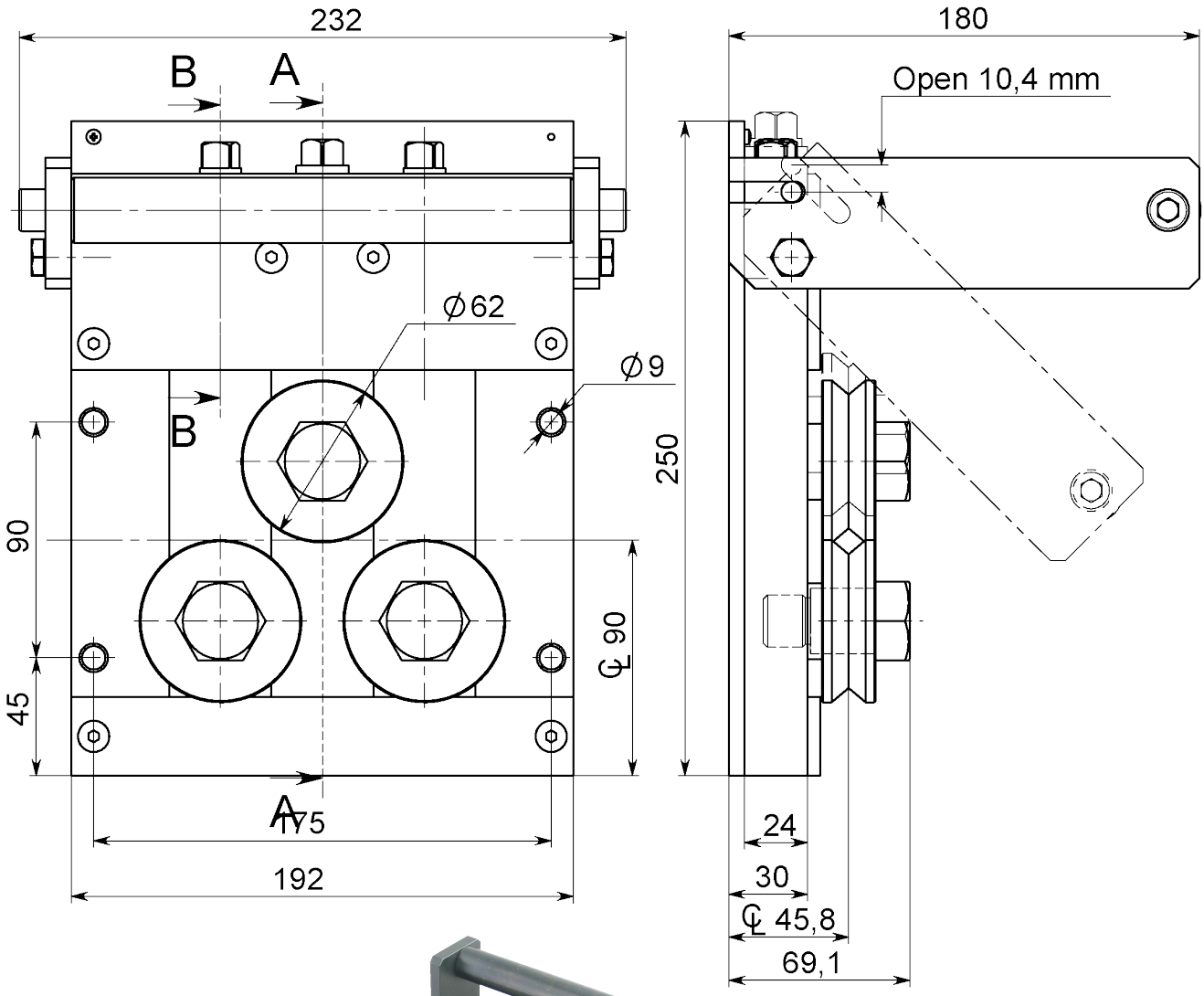



With SD Straightening rollers

Article: 03743
Weight: 15kg

Drawing No. 3-400694-00

Subec AB **Hesselmans Torg 5** **SE- 131 54 Nacka** **Sweden** **Phone: +46-8-88 46 33** **Email: info@subec.se** **Web: www.subec.se**

Copyright © 2026 Subec

WIRE STRAIGHTENER S80-Q-5

Product range: Ø 7,0-16,0mm

Q = Quick closing by excenter

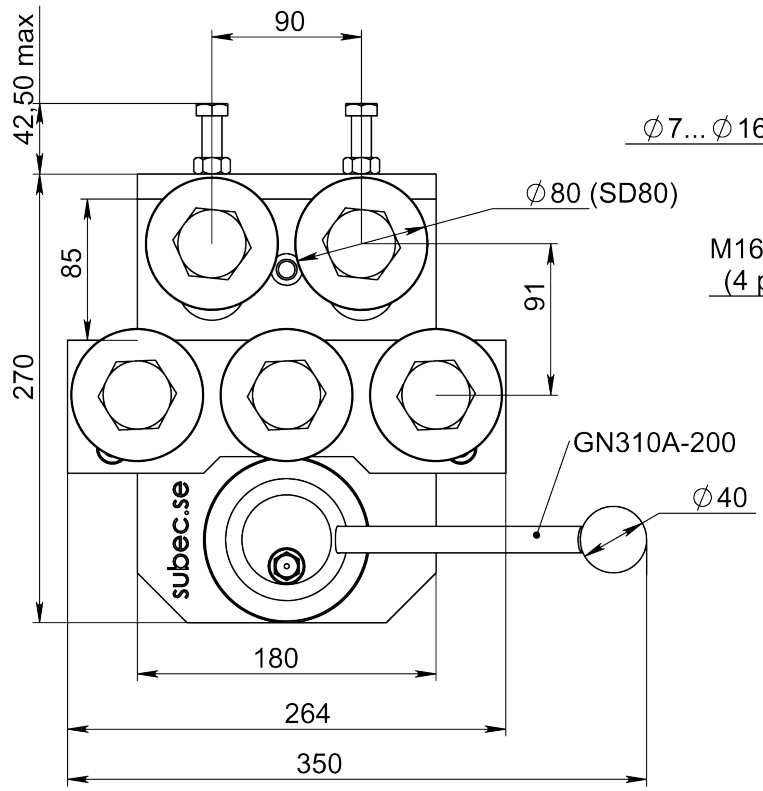

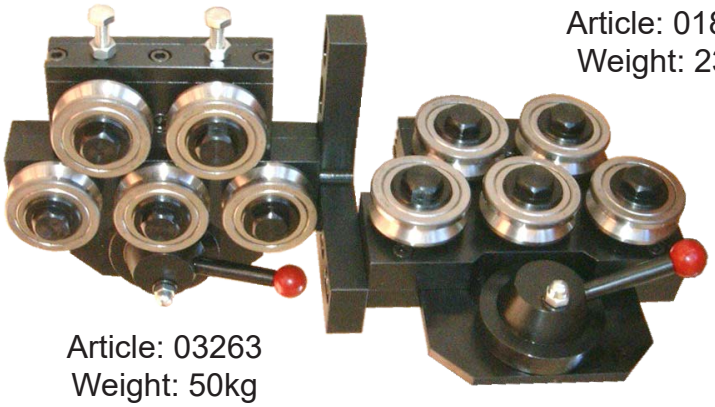

Article: 01804*
Weight: 23kg

Article: 03263
Weight: 50kg

For wire bigger than Ø13mm order with straightening roller:
Article 08176



With SD/SL Straightening rollers

Drawing No. 3-400420-00

* Stock item

Subec AB **Hesselmans Torg 5** **SE- 131 54 Nacka** **Sweden** **Phone: +46-8-88 46 33** **Email: info@subec.se** **Web: www.subec.se**

Copyright © 2026 Subec

WIRE STRAIGHTENER S80-Q-AA-5

Product range: Ø 7,0-16,0mm

Q = Quick closing by excenter
AA = All rollers individually adjustable

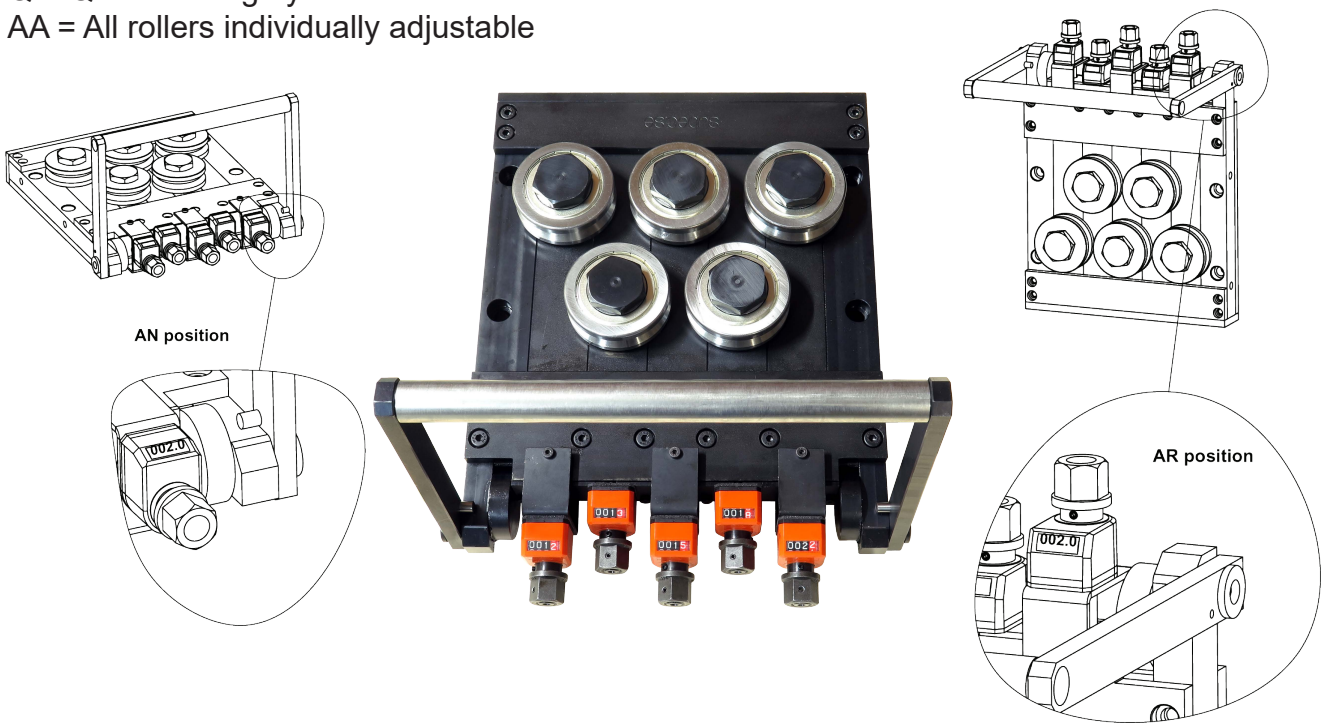

Article: 10436

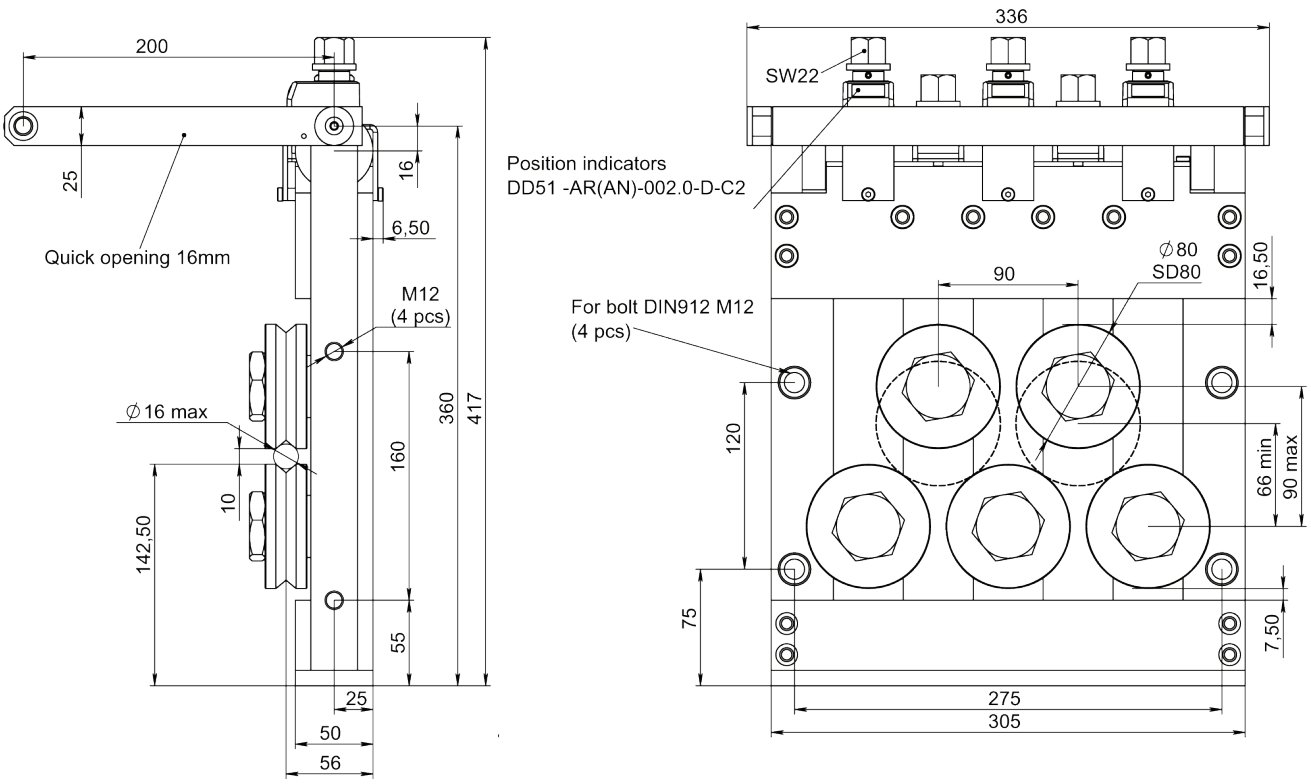

Drawing No. 3-400447-00

Subec AB **Hesselmans Torg 5** **SE- 131 54 Nacka** **Sweden** **Phone: +46-8-88 46 33** **Email: info@subec.se** **Web: www.subec.se**

Copyright © 2026 Subec

DRIVEN WIRE STRAIGHTENER S80-Q-7

Product range: Ø 7,0-16,0mm

Q = Quick closing by excenter

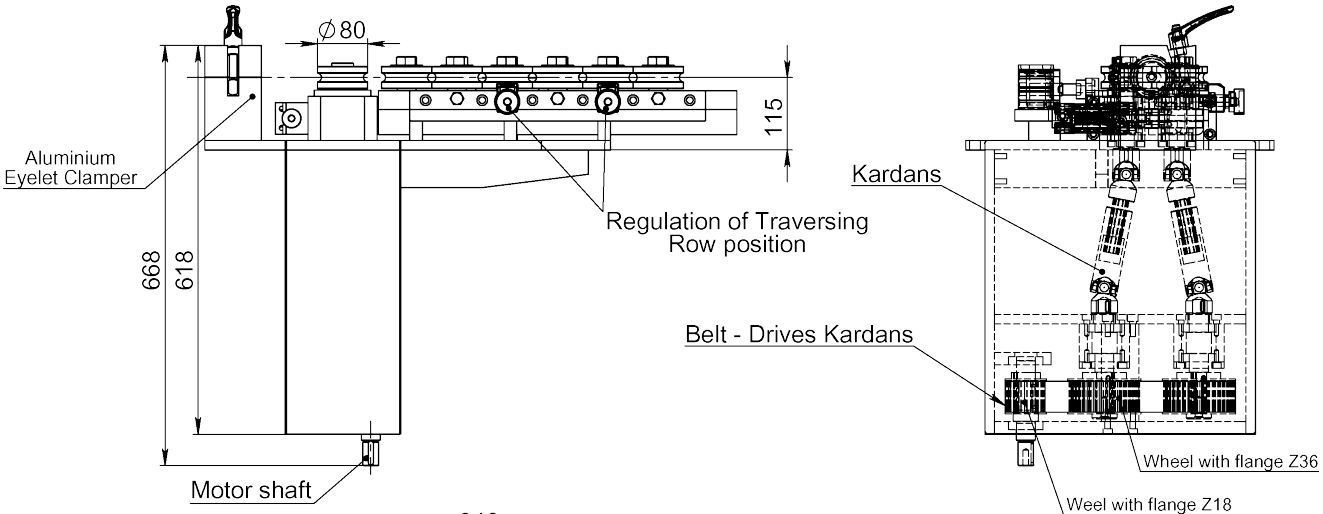

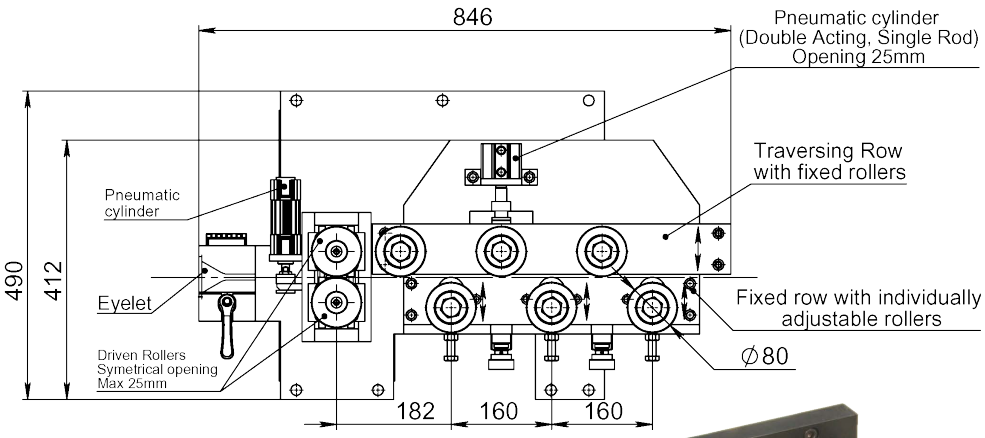

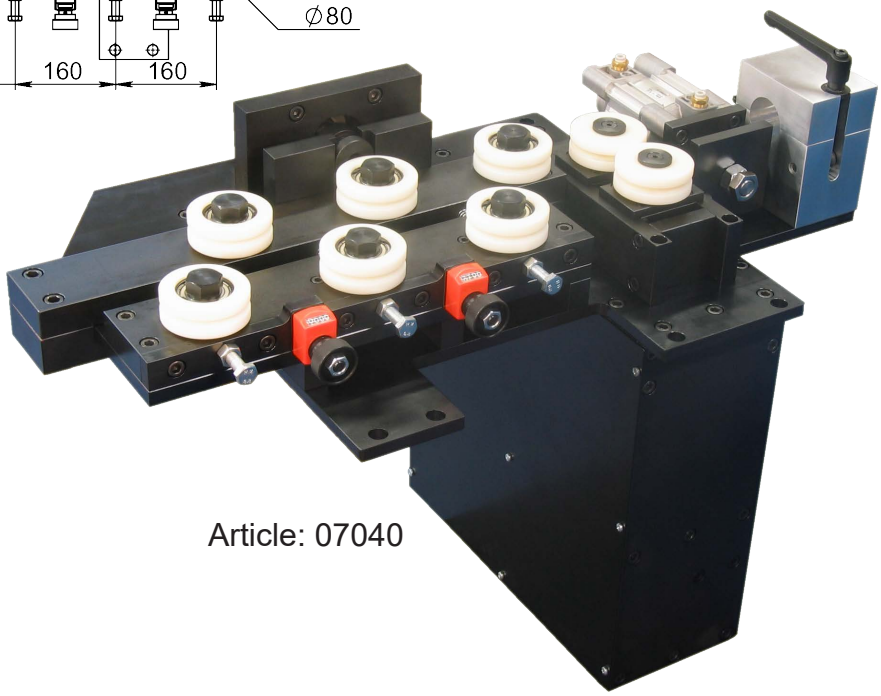

Article: 07040

Drawing No. 3-400907-00

Subec AB **Hesselmans Torg 5** **SE- 131 54 Nacka** **Sweden** **Phone: +46-8-88 46 33** **Email: info@subec.se** **Web: www.subec.se**

Copyright © 2026 Subec

WIRE STRAIGHTENER SERIES S80-AA

Product range: Ø 7-15mm

AA = All rollers individually adjustable

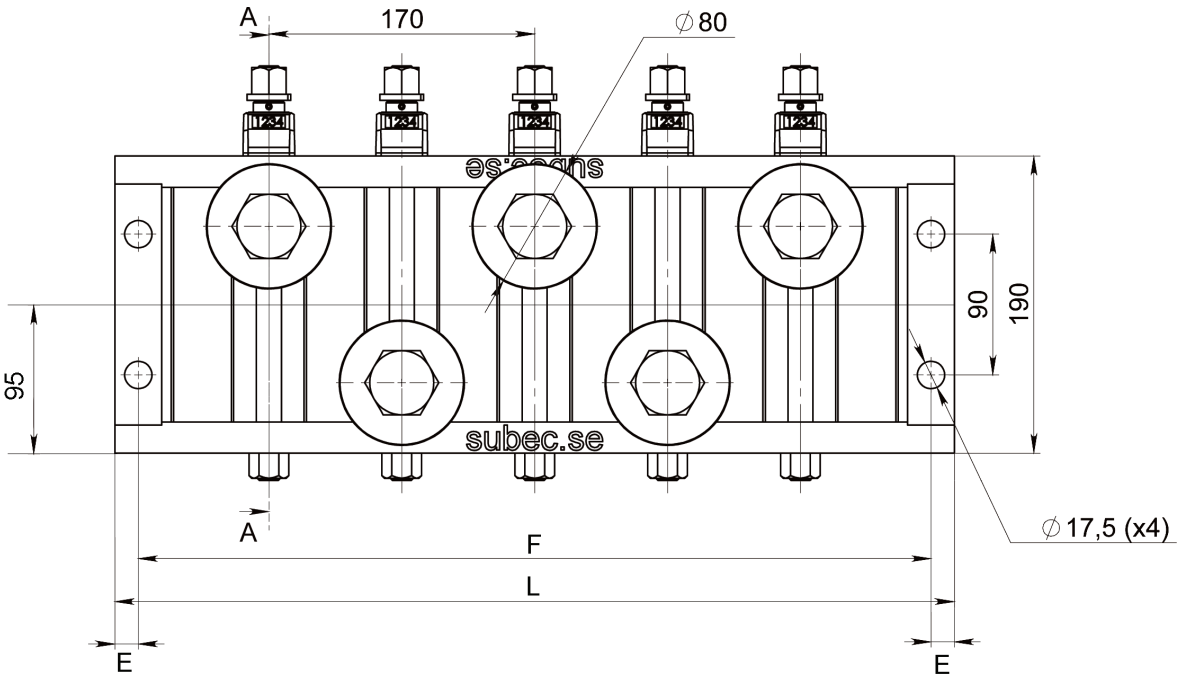

SECTION A-A

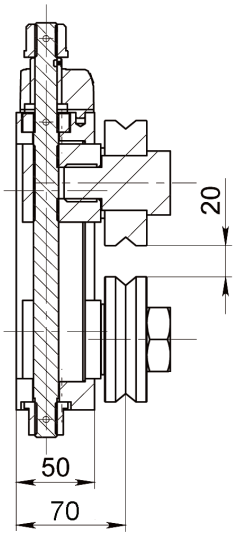

Note:
Available with position indicators, as seen in drawing.

Type	AA3	AA5	AA7
			
L	367	537	707
E	15	15	15
F	337	507	677
kg	~18,5kg	~32kg	~48kg
Article Single	**5873 (11675)**	**4030 (12884)**	**2191**
Article Double (with pos. indicators)		**(12885)**	

With SD80 Straightening rollers (3-400475-00)
Standard: V-groove, other profiles acc. your specifications

Drawing No. 3-400695-00

Subec AB **Hesselmans Torg 5** **SE- 131 54 Nacka** **Sweden** **Phone: +46-8-88 46 33** **Email: info@subec.se** **Web: www.subec.se**

Copyright © 2026 Subec

WIRE STRAIGHTENER S80-SY-5

Product range: Ø 7,0-16,0mm

SY = With symmetrical open/close of upper and lower row of rollers to wire centreline.

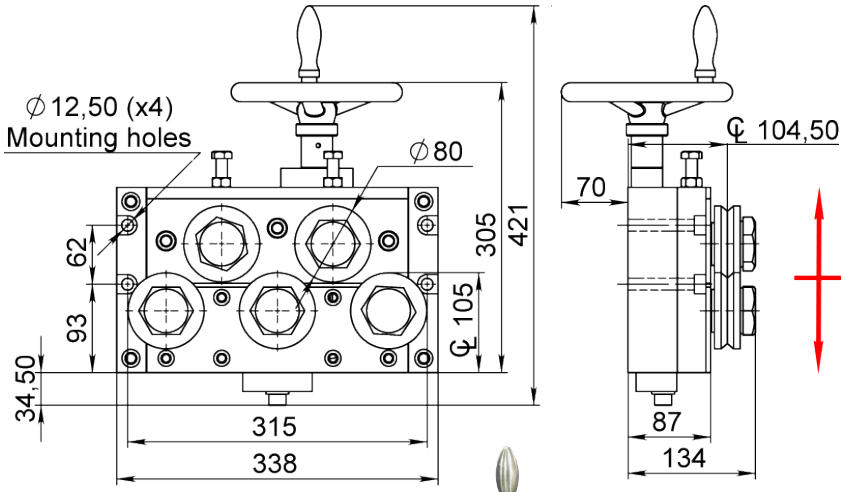

Symetrical Opening



Article: 05629
Weight: 46kg

Article: 05628A
Weight: 136kg



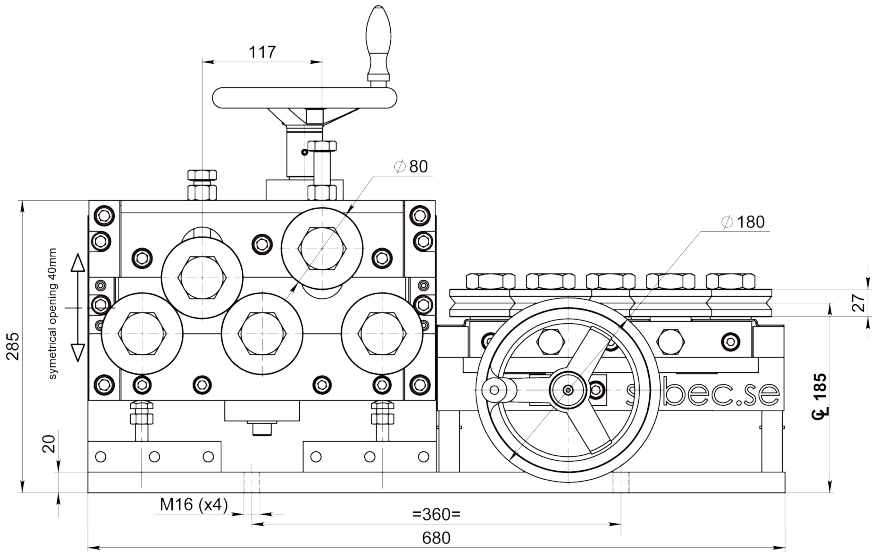

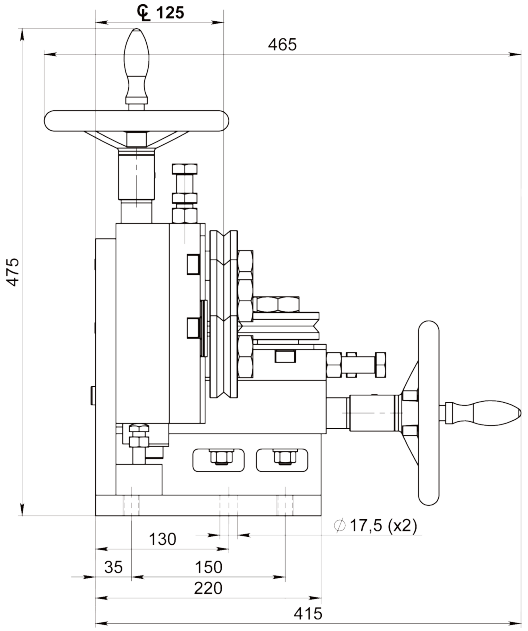

With SD Straightening rollers

Drawing No. 3-400593-00

Subec AB **Hesselmans Torg 5** **SE- 131 54 Nacka** **Sweden** **Phone: +46-8-88 46 33** **Email: info@subec.se** **Web: www.subec.se**

Copyright © 2026 Subec

WIRE STRAIGHTENER S80-SY-7

Product range: Ø 7,0-16,0mm

SY = With symmetrical open/close of upper and lower row of rollers to wire centreline.

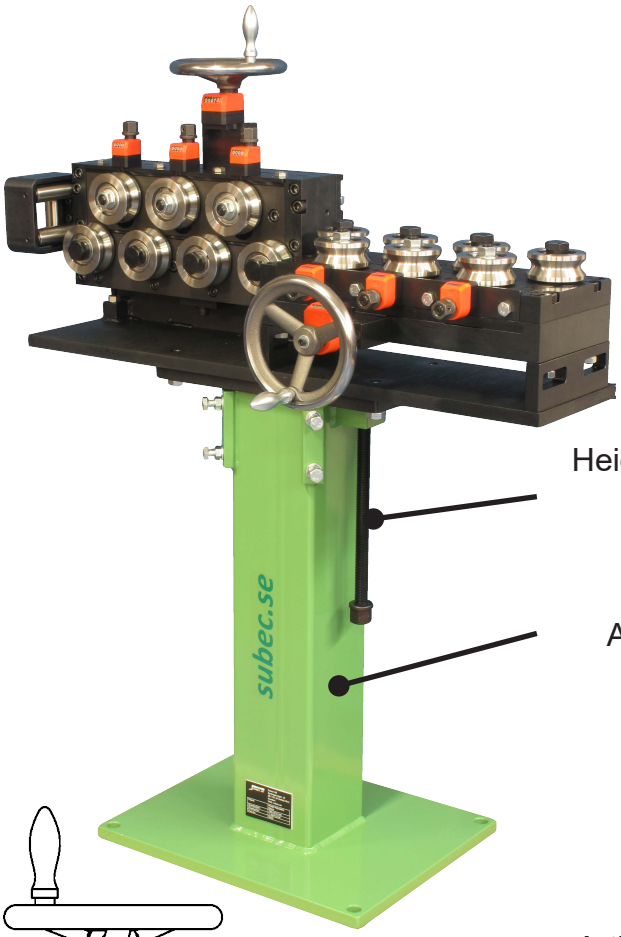

Height adjustable spindle

Stand
Article: 9555

Roller cross
Art.nr.9478

Article: 9475
Weight: 195kg
Option: With Position Indicator

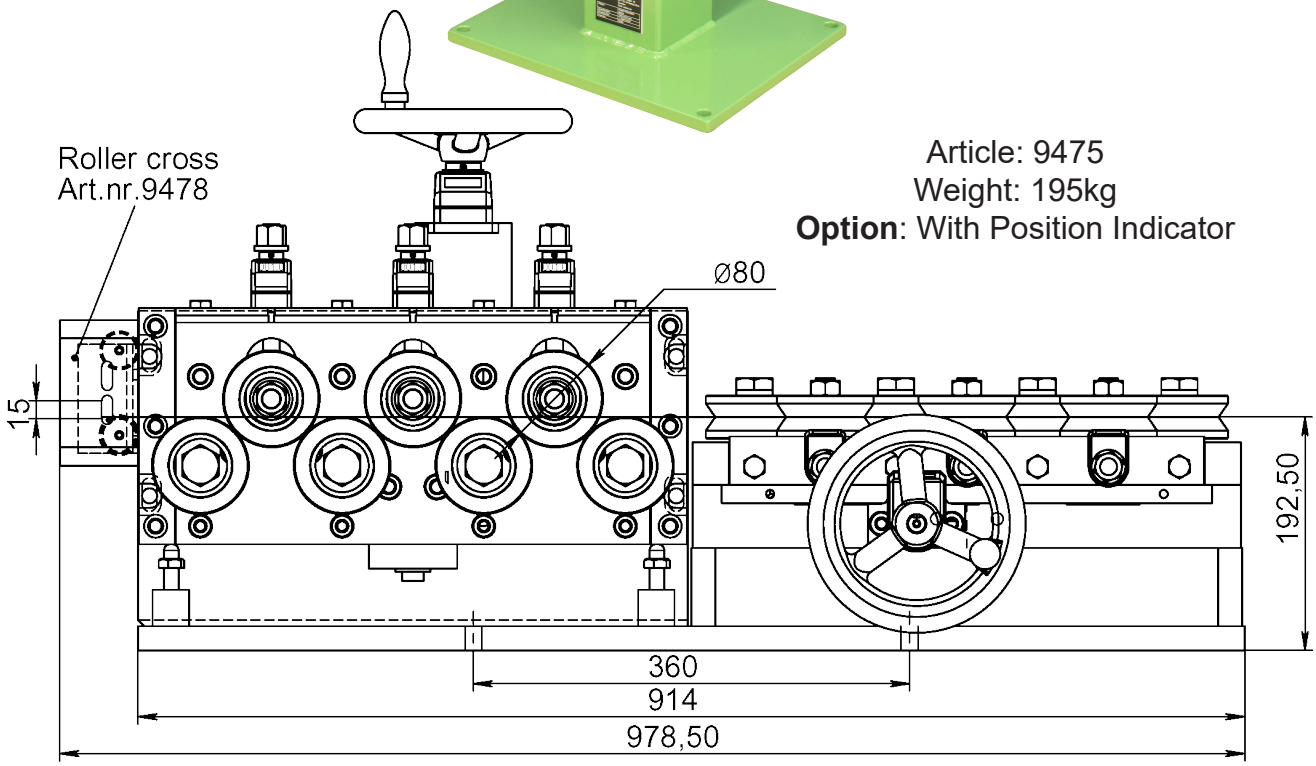

With SL Straightening rollers

Drawing No. 3-300444-03

Subec AB **Hesselmans Torg 5** **SE- 131 54 Nacka** **Sweden** **Phone: +46-8-88 46 33** **Email: info@subec.se** **Web: www.subec.se**

Copyright © 2026 Subec

WIRE STRAIGHTENER S80-SY-AA-5

Product range: Ø 7,0-16,0mm

SY = With symmetrical open/close of upper and lower row of rollers to wire centreline.
AA = All rollers individually adjustable

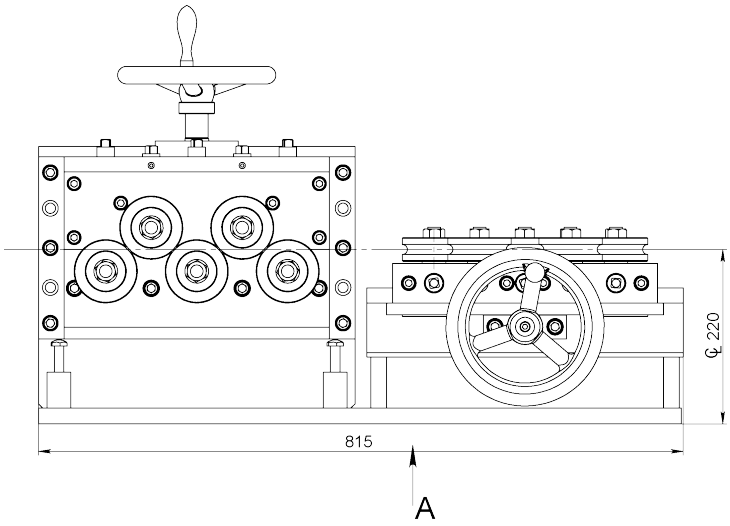

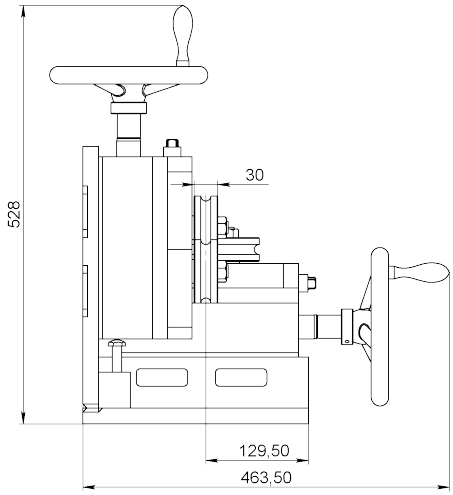

View A (mounting holes)

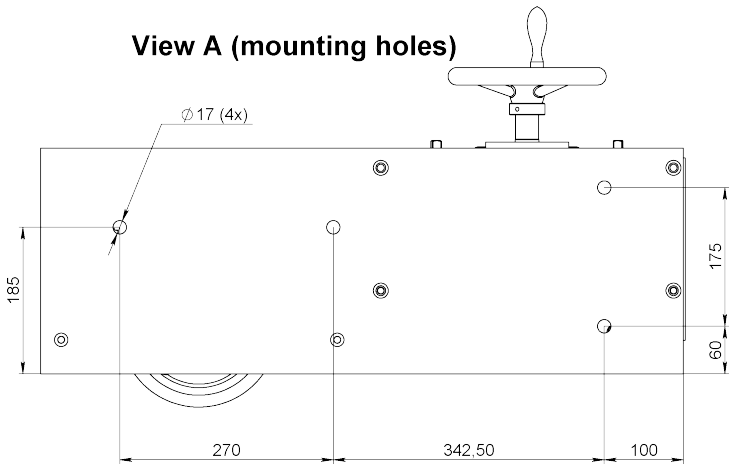

Article: 01947
Weight: 180kg

With SL Straightening rollers

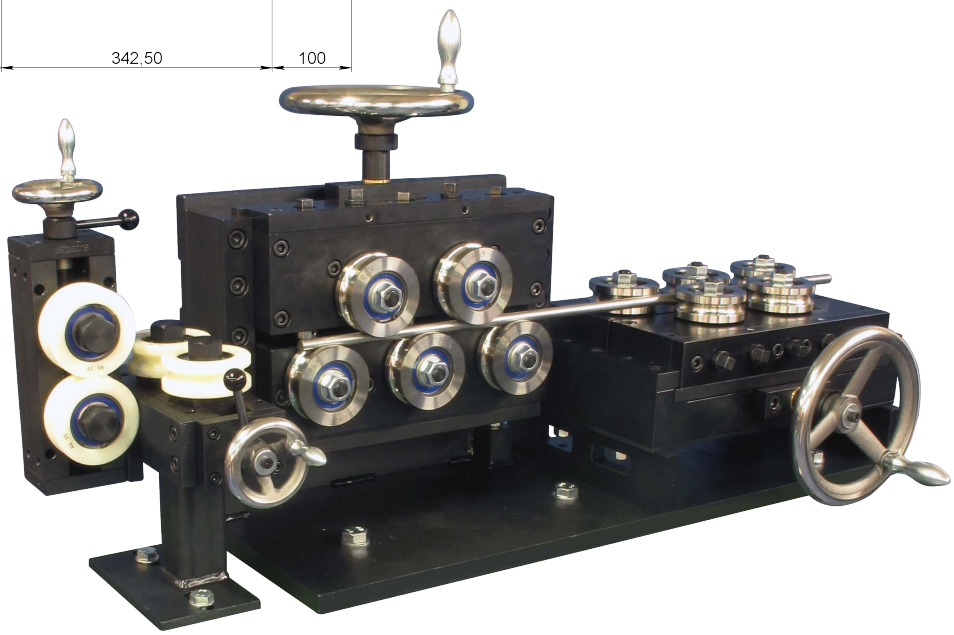

Drawing No. 3-400480-00

Subec AB **Hesselmans Torg 5** **SE- 131 54 Nacka** **Sweden** **Phone: +46-8-88 46 33** **Email: info@subec.se** **Web: www.subec.se**

Copyright © 2026 Subec

WIRE STRAIGHTENER S80-HW-3

Product range: Ø 7,0-16,0mm

HW = Open/close by handwheel

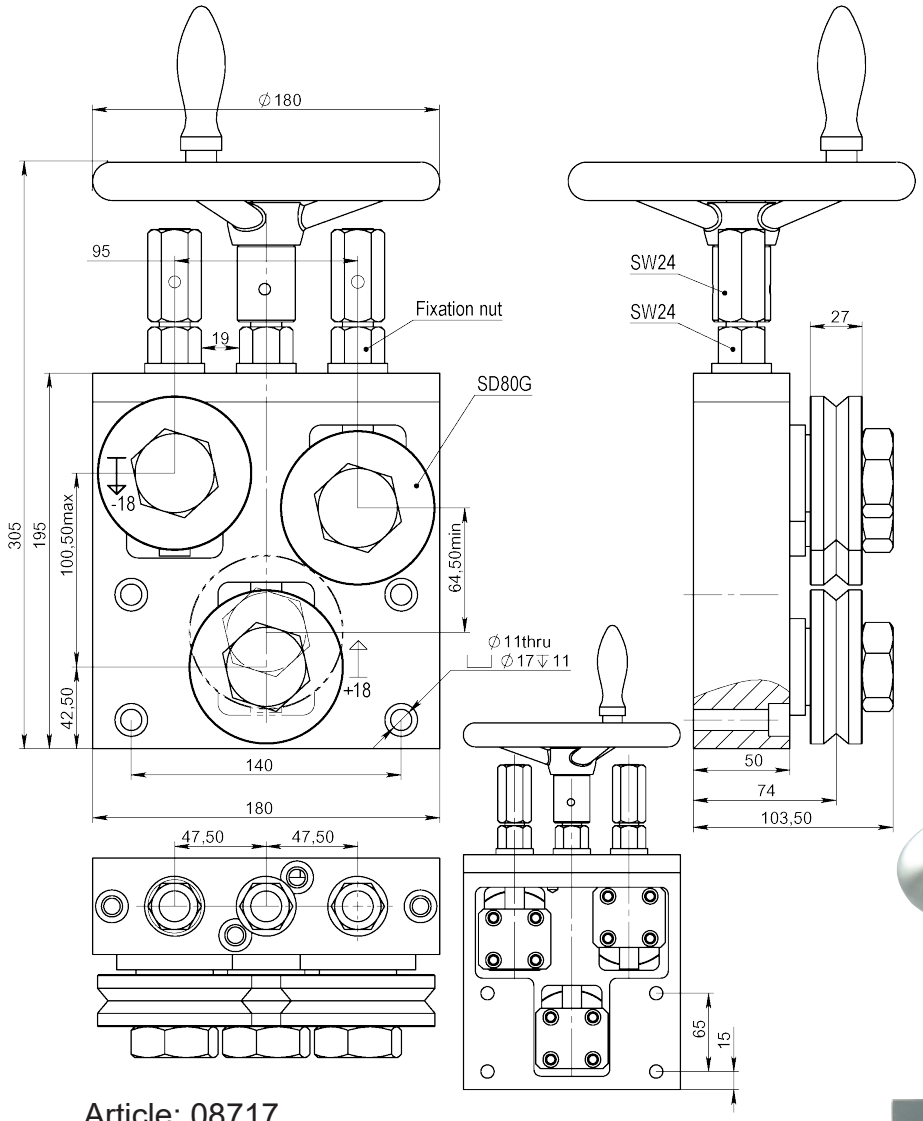

Article: 08717
Weight: 13kg



With SL Straightening rollers

Drawing No. 3-401120-00

Subec AB **Hesselmans Torg 5** **SE- 131 54 Nacka** **Sweden** **Phone: +46-8-88 46 33** **Email: info@subec.se** **Web: www.subec.se**

Copyright © 2026 Subec

WIRE STRAIGHTENER S80-HW-5

HW = Open/close by handwheel

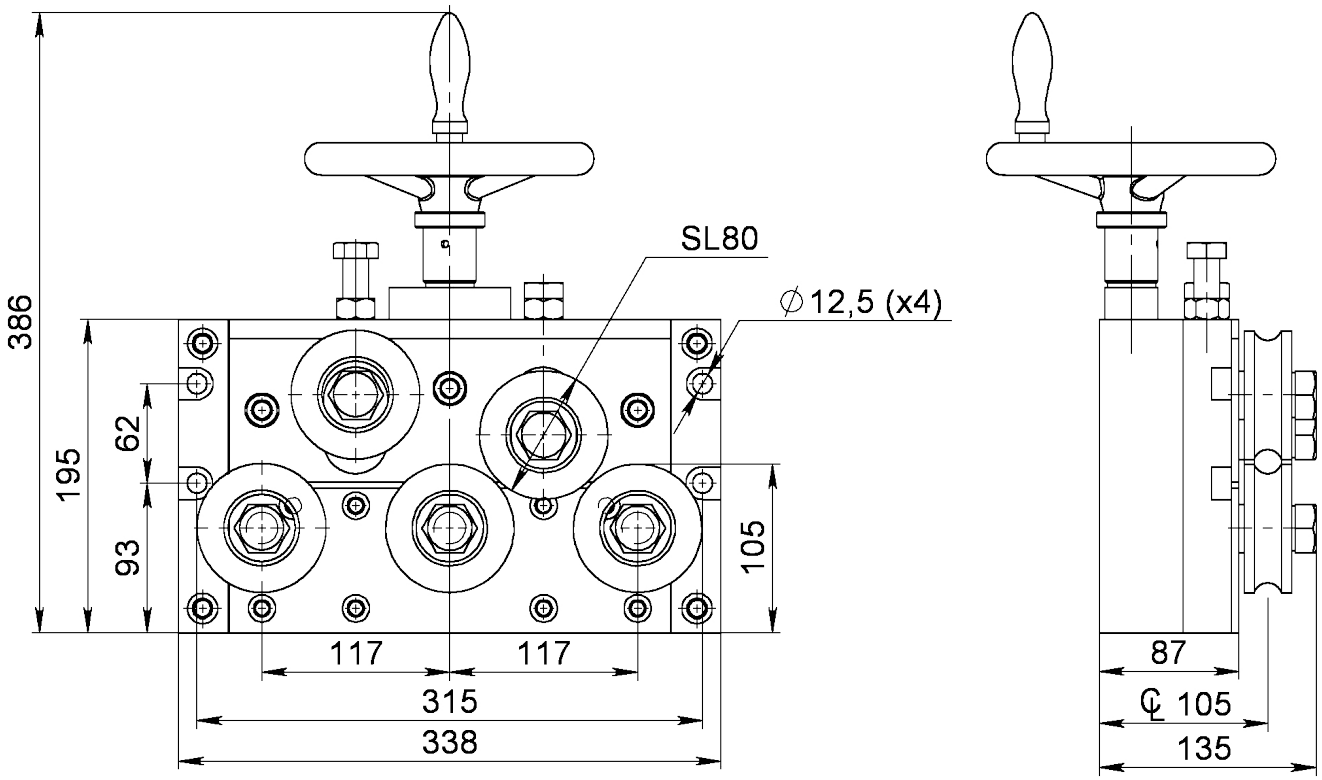

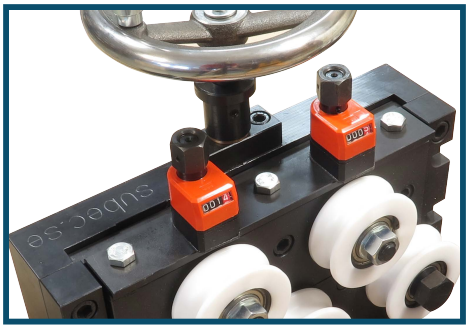

Option: With position indicators
Article: 9360

Article: 9067A*



Drawing No. 3-300444-00

* Stock item

Subec AB **Hesselmans Torg 5** **SE- 131 54 Nacka** **Sweden** **Phone: +46-8-88 46 33** **Email: info@subec.se** **Web: www.subec.se**

Copyright © 2026 Subec

WIRE STRAIGHTENER S80-HW-7

Product range: Ø 7,0-16,0mm

HW = Open/close by handwheel

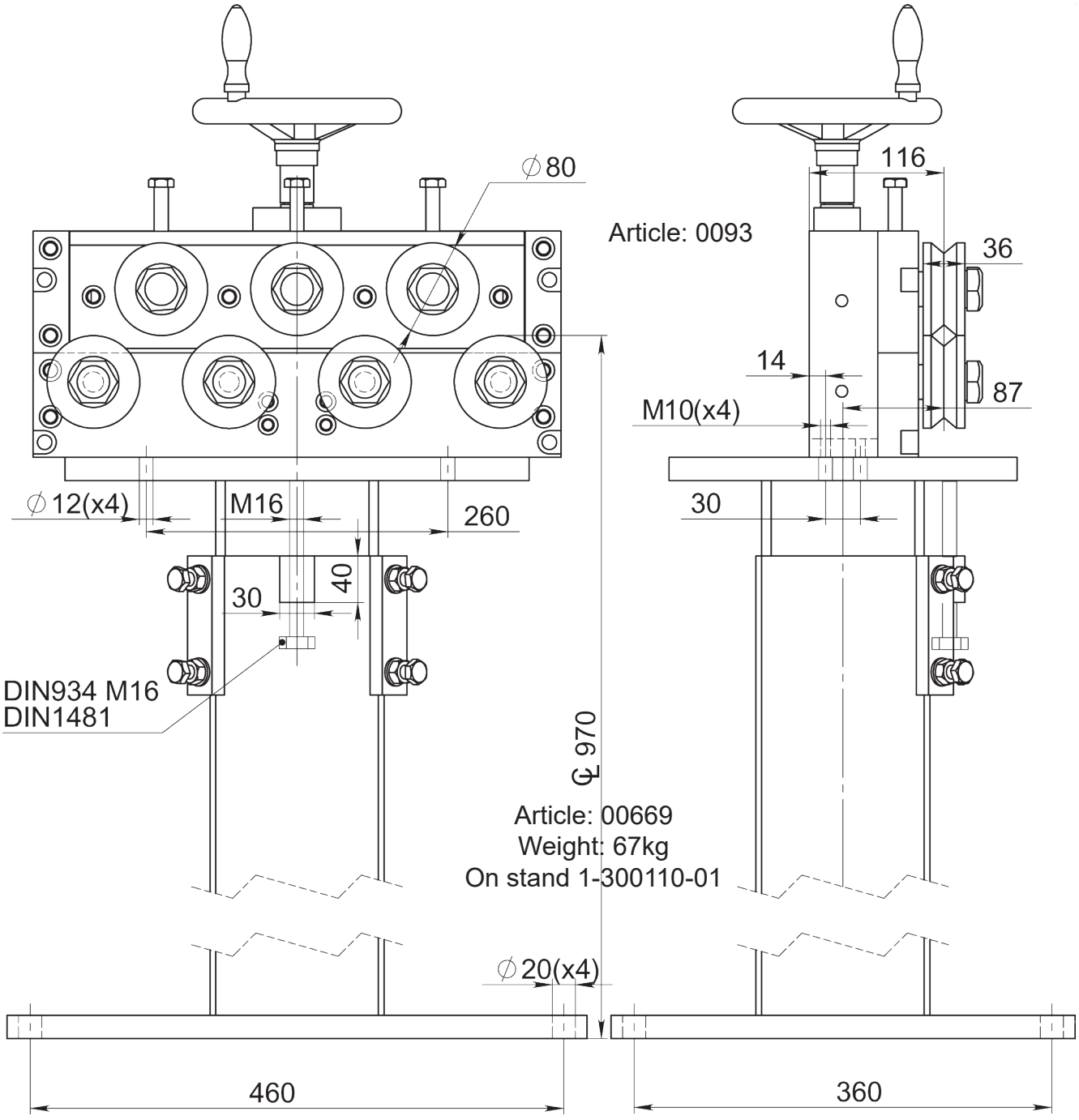

With SL Straightening rollers

Drawing No. 3-300444-00

Subec AB **Hesselmans Torg 5** **SE- 131 54 Nacka** **Sweden** **Phone: +46-8-88 46 33** **Email: info@subec.se** **Web: www.subec.se**

Copyright © 2026 Subec

WIRE STRAIGHTENER S80-TA-5

Product range: Ø 7,0-16,0mm

TA = Top row rollers adjustable

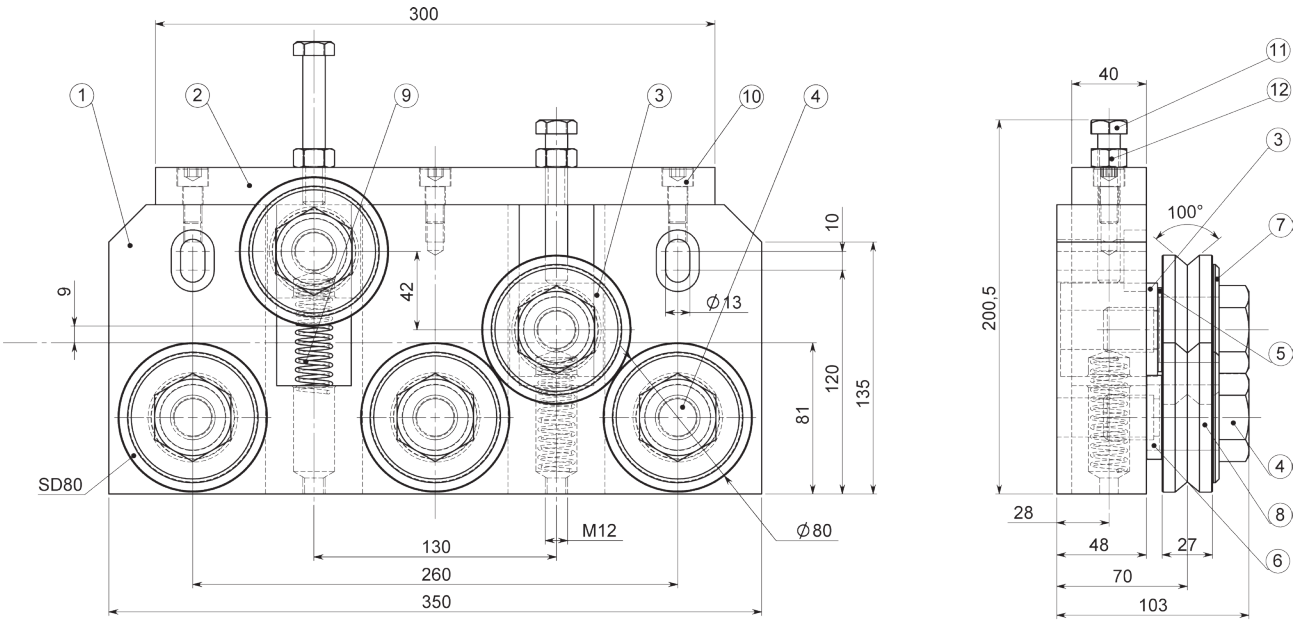

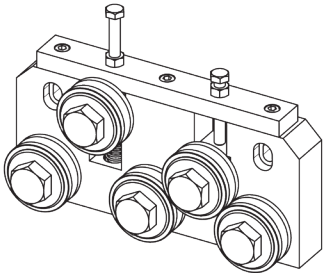

Article: 03218

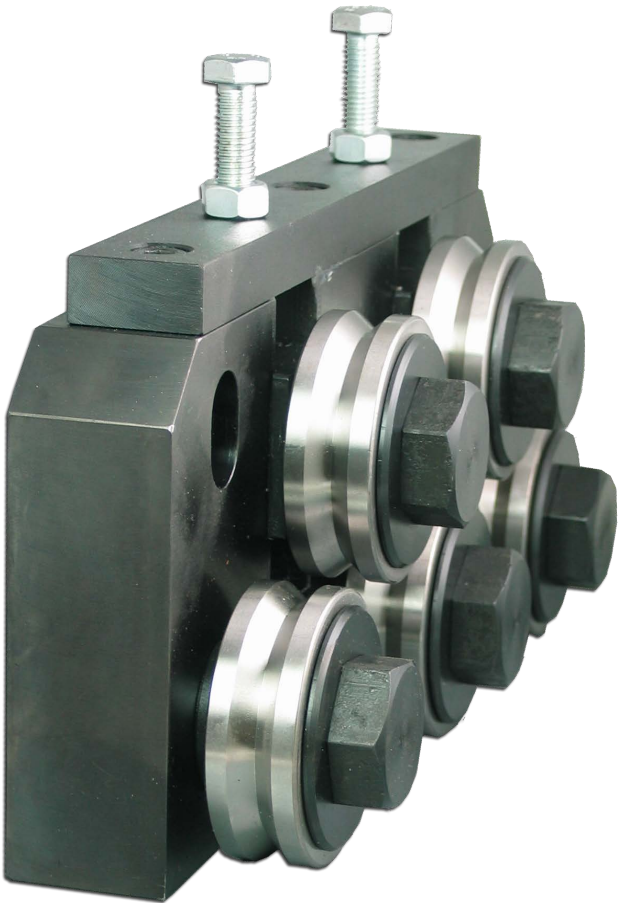

With SL Straightening rollers

Drawing No. 3-400644-00

Subec AB **Hesselmans Torg 5** **SE- 131 54 Nacka** **Sweden** **Phone: +46-8-88 46 33** **Email: info@subec.se** **Web: www.subec.se**

Copyright © 2026 Subec

WIRE STRAIGHTENER S80-VA-5

VA = Variable roller adjustment

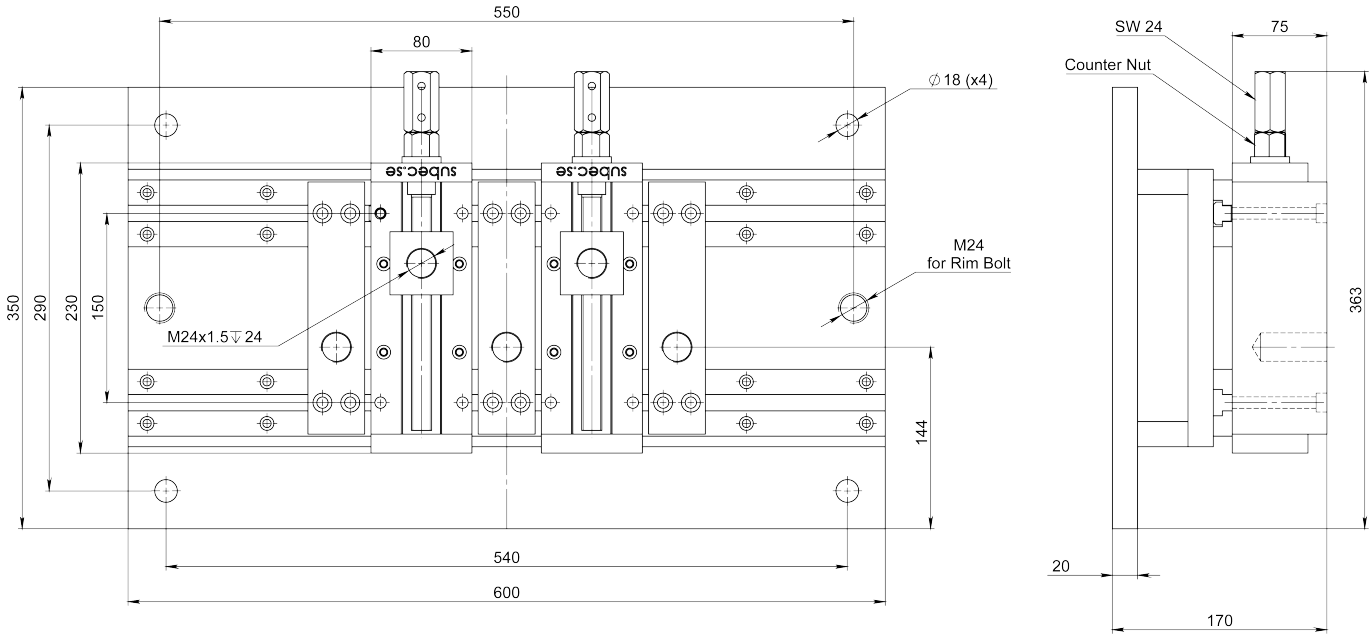

Horizontal
Article: 10844



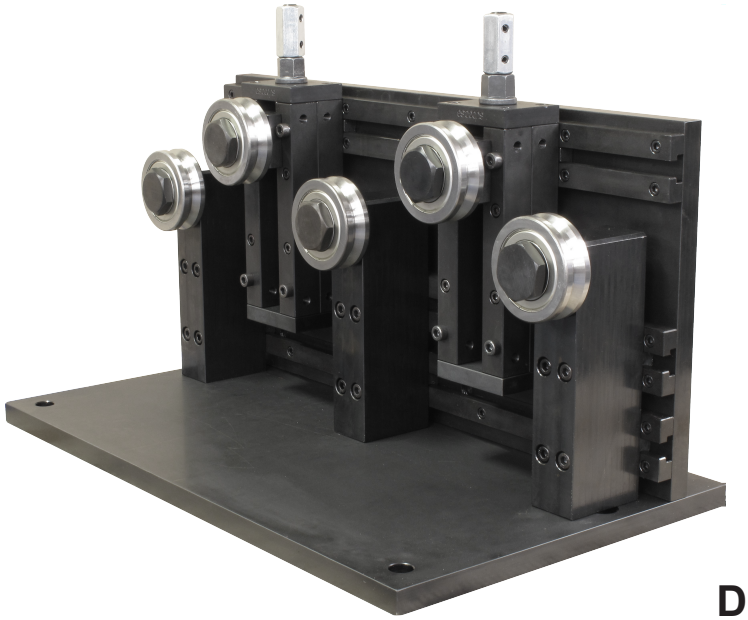

Vertical
Article: 10916

Drawing No. 3-401264-00

Subec AB **Hesselmans Torg 5** **SE- 131 54 Nacka** **Sweden** **Phone: +46-8-88 46 33** **Email: info@subec.se** **Web: www.subec.se**

Copyright © 2026 Subec

WIRE STRAIGHTENER S90-VA-5

VA = Variable roller adjustment

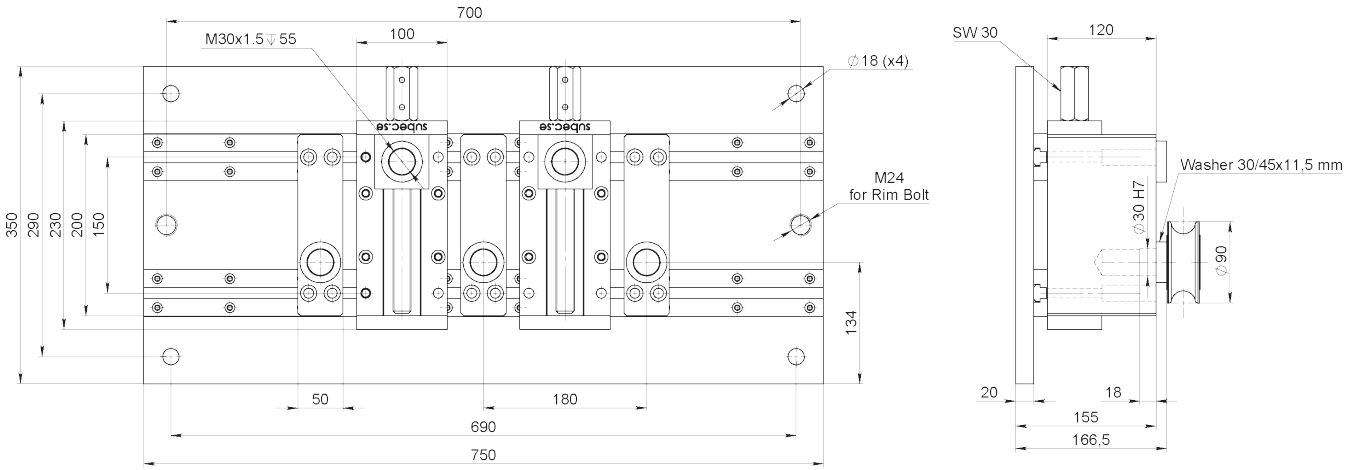

Horizontal
Article: 11249

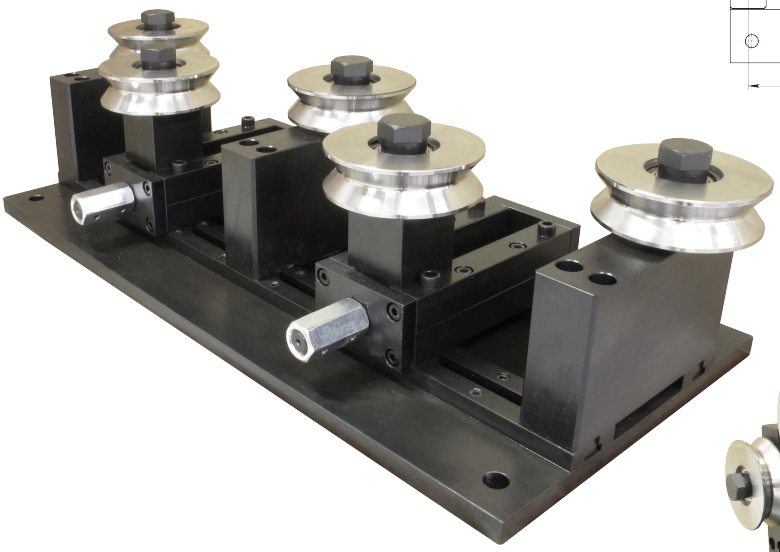

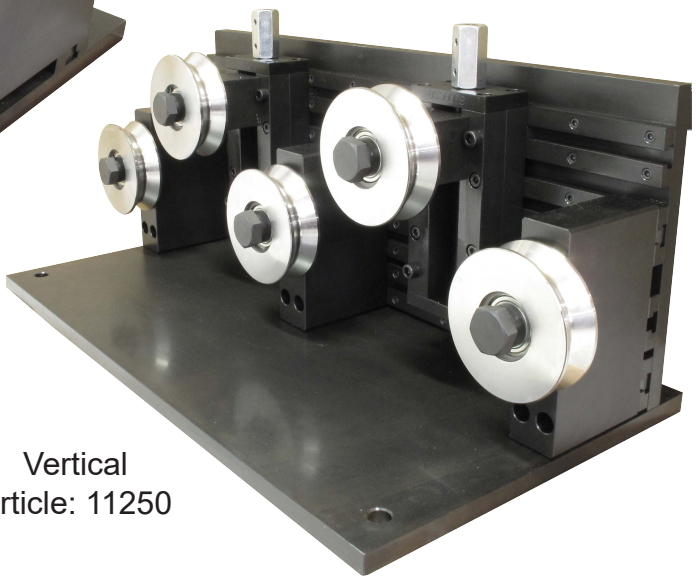

Vertical
Article: 11250

Drawing No. 3-401264-00

Subec AB **Hesselmans Torg 5** **SE- 131 54 Nacka** **Sweden** **Phone: +46-8-88 46 33** **Email: info@subec.se** **Web: www.subec.se**

Copyright © 2026 Subec

WIRE STRAIGHTENER S90-HW-7

HW = Open/close by handwheel

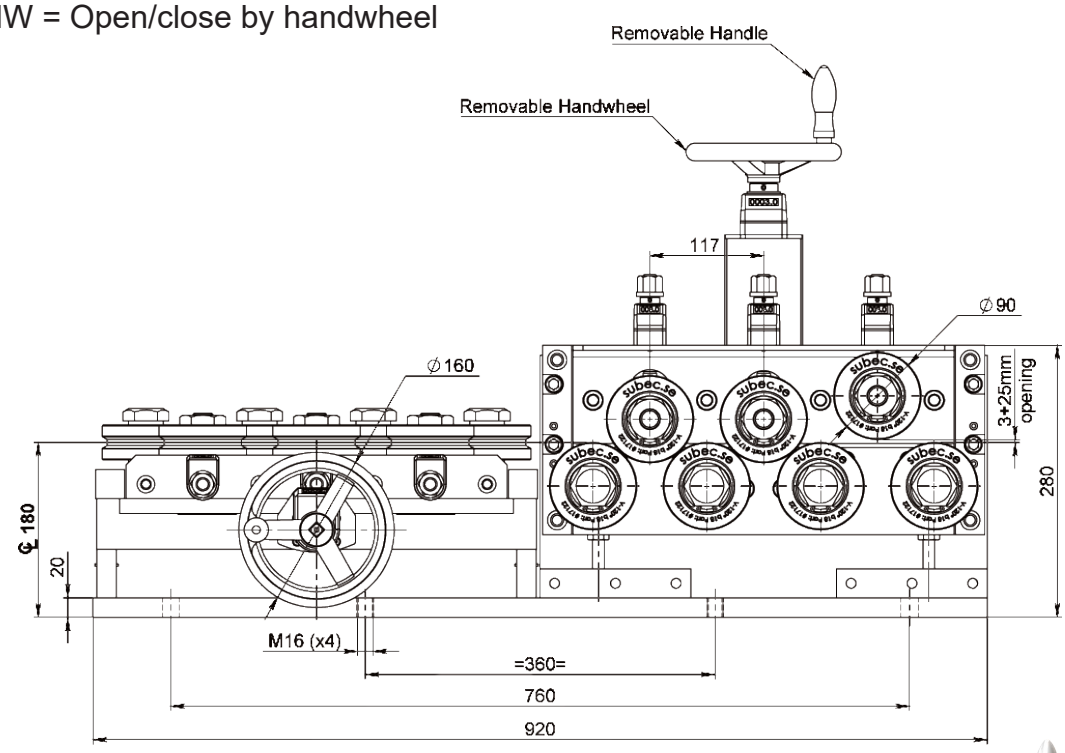

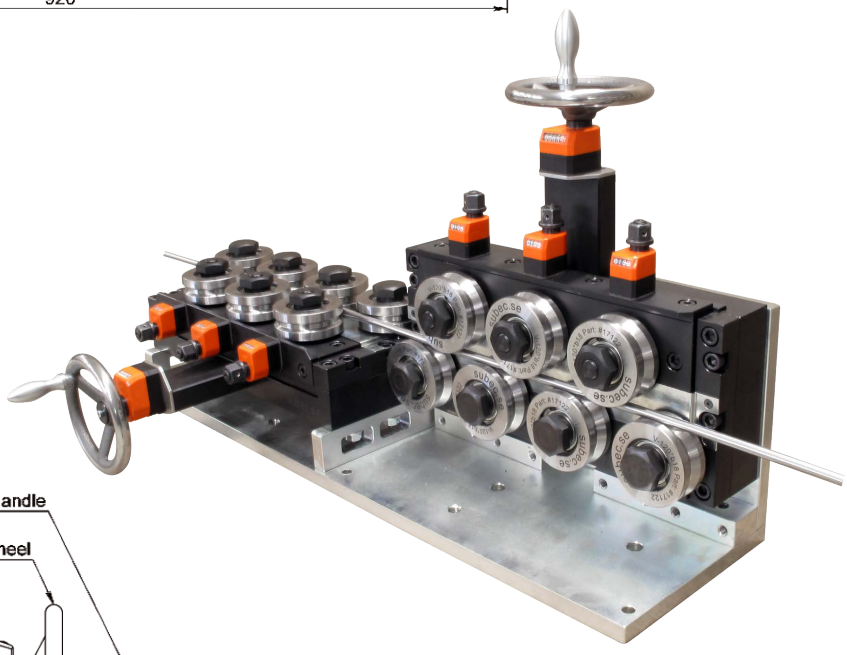

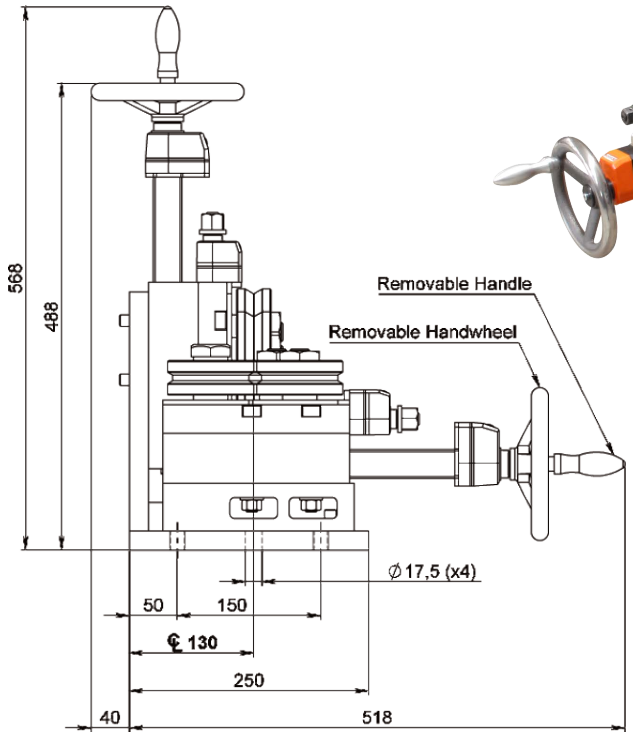

Double systemwith position indicators:
Article: 17030

Single system with position indicators:
Article: 17173

Drawing No. 3-300444-00

Subec AB **Hesselmans Torg 5** **SE- 131 54 Nacka** **Sweden** **Phone: +46-8-88 46 33** **Email: info@subec.se** **Web: www.subec.se**

Copyright © 2026 Subec

HEAVY DUTY WIRE STRAIGHTENER
S100-SY-5

Product range: Ø 15,0-30,0mm

SY = With symmetrical open/close of upper and lower row of rollers to wire centreline.

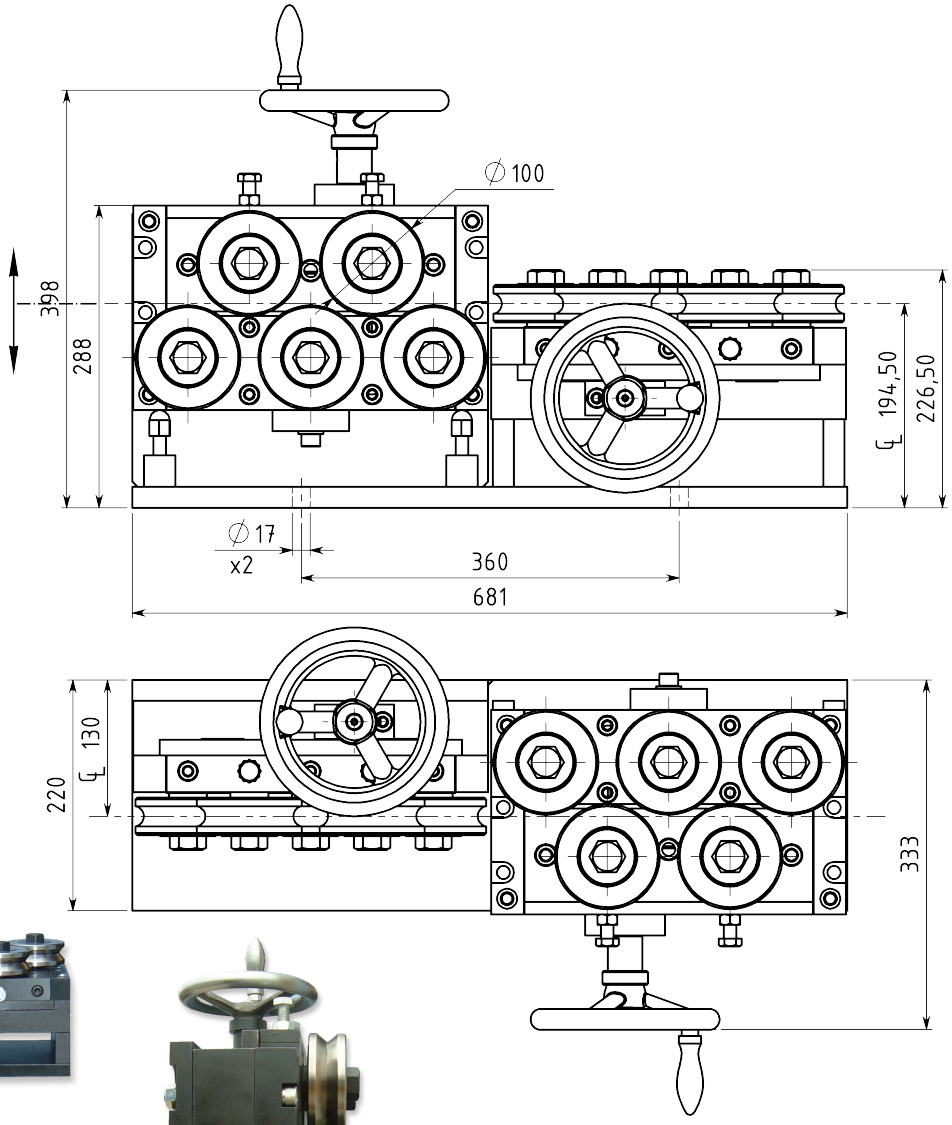

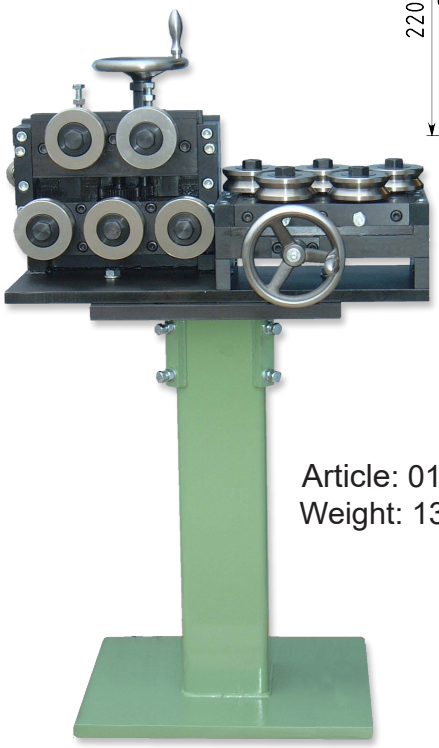

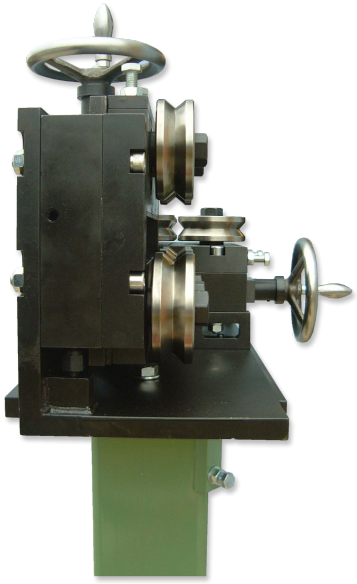

Article: 01887
Weight: 130kg

With SL Straightening rollers

Drawing No. 3-400509-00

Subec AB **Hesselmans Torg 5** **SE- 131 54 Nacka** **Sweden** **Phone: +46-8-88 46 33** **Email: info@subec.se** **Web: www.subec.se**

Copyright © 2026 Subec

HEAVY DUTY WIRE STRAIGHTENER
S100-SY-7

Product range: Ø 15,0-30,0mm

SY = With symmetrical open/close of upper and lower row of rollers to wire centreline.

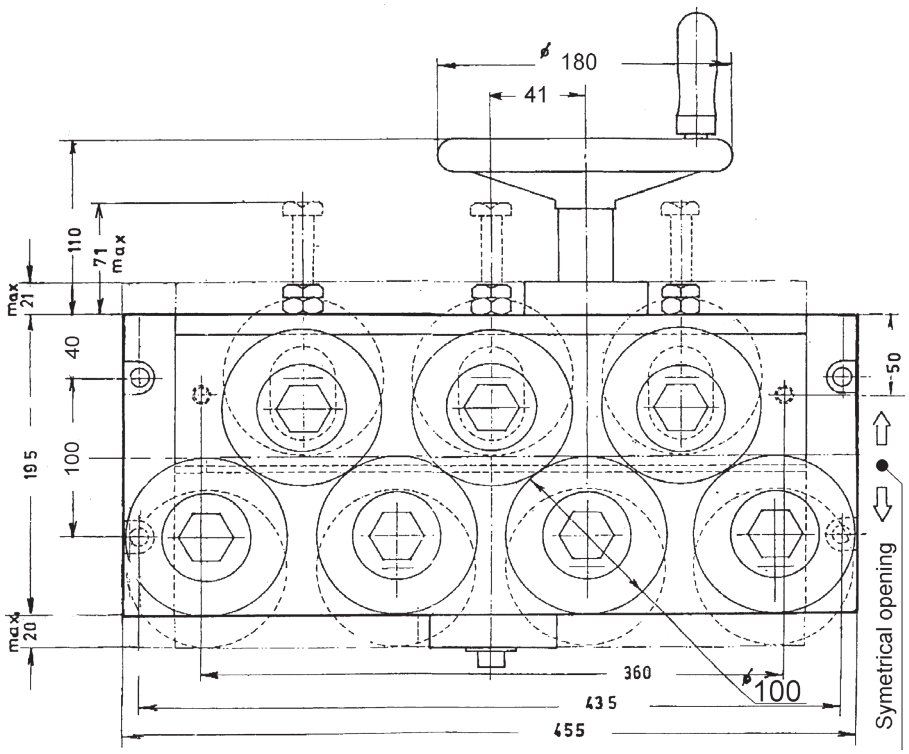

Article: 00778





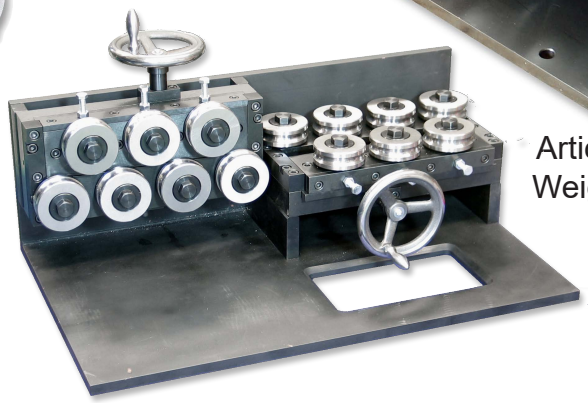

Article: 01669
Weight: 174kg

With SL Straightening rollers

Drawing No. 3-400400-00

Subec AB **Hesselmans Torg 5** **SE- 131 54 Nacka** **Sweden** **Phone: +46-8-88 46 33** **Email: info@subec.se** **Web: www.subec.se**

Copyright © 2026 Subec

HEAVY DUTY WIRE STRAIGHTENER
S100-HW-5

Product range: Ø 15,0-30,0mm

HW = Open/close by handwheel

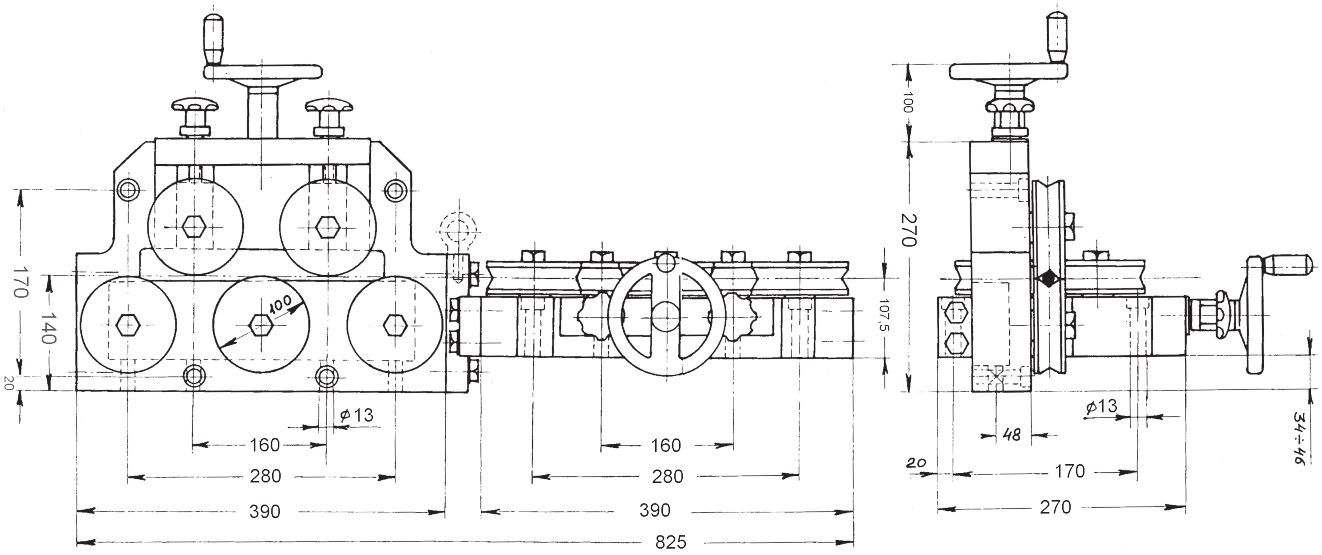

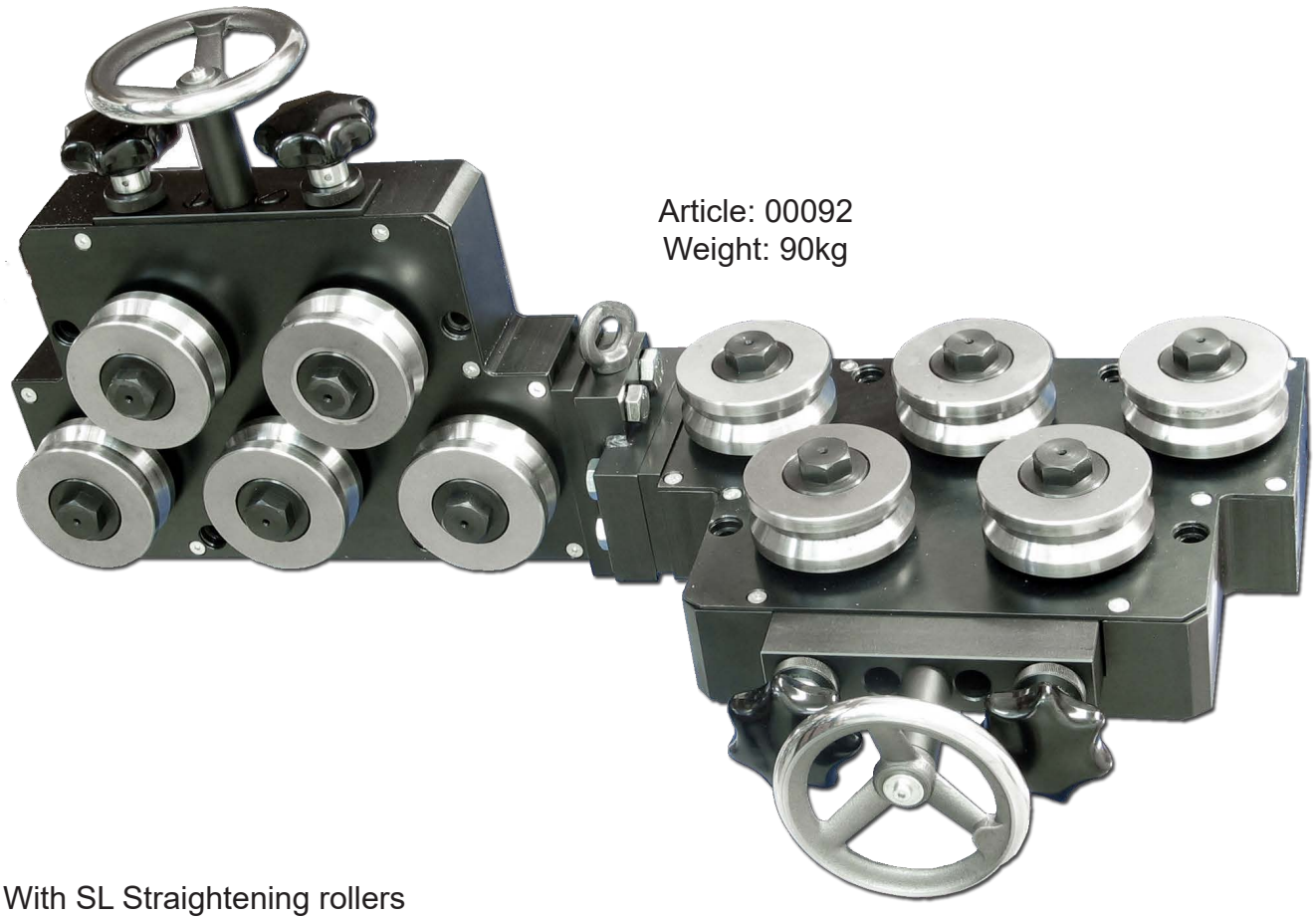

Article: 00092
Weight: 90kg

With SL Straightening rollers

Drawing No. 3-400353-00

Subec AB **Hesselmans Torg 5** **SE- 131 54 Nacka** **Sweden** **Phone: +46-8-88 46 33** **Email: info@subec.se** **Web: www.subec.se**

Copyright © 2026 Subec

HEAVY DUTY WIRE STRAIGHTENER
S100-SY-3

Product range: Ø 15,0-30,0mm

SY = With symmetrical open/close of upper and lower row of rollers to wire centreline.

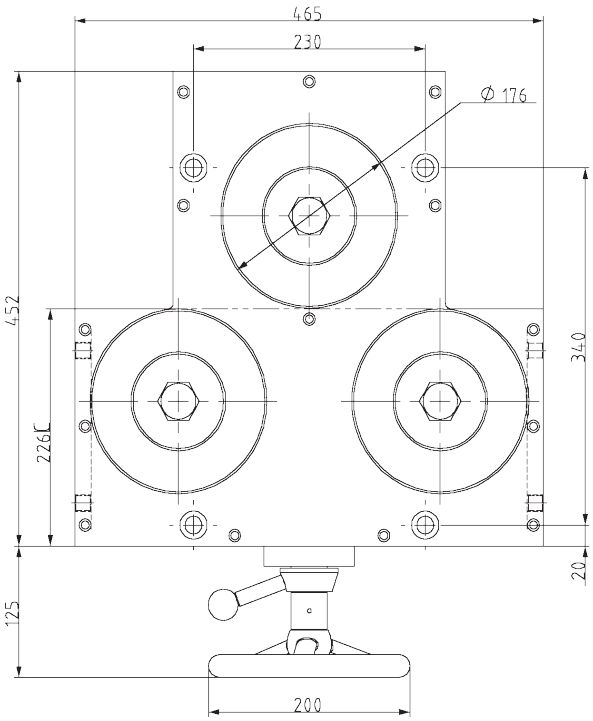

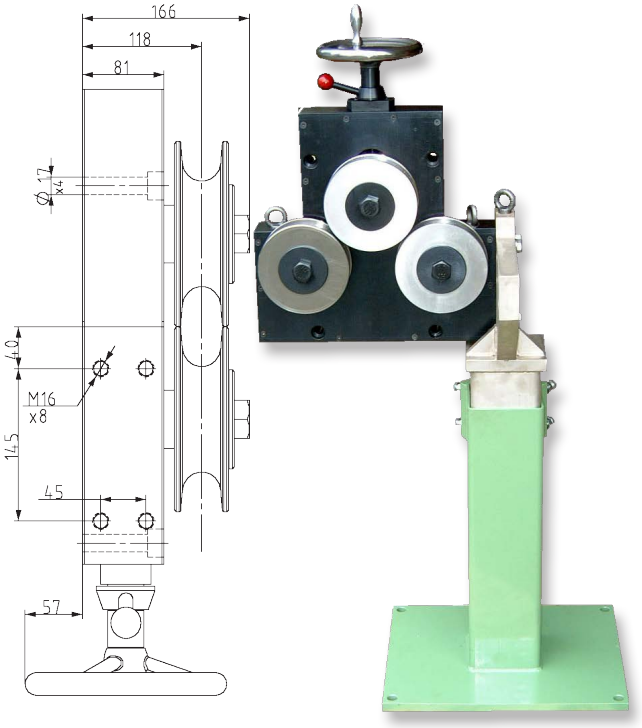

Article: 01227

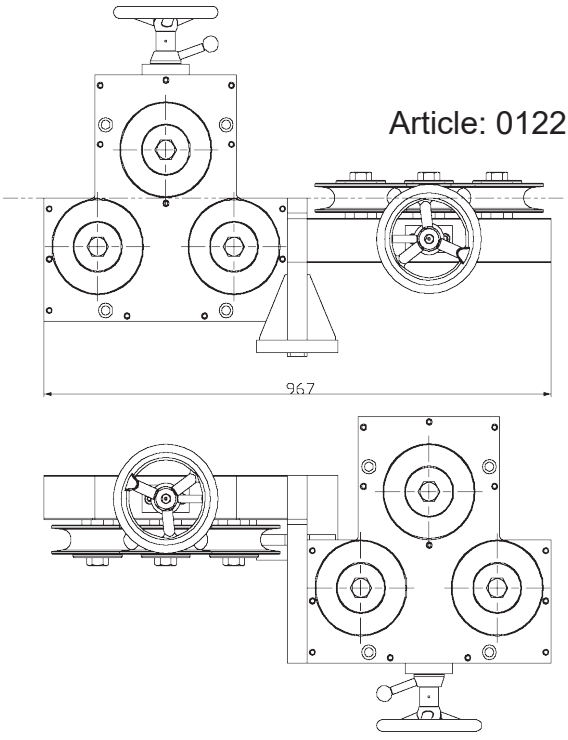

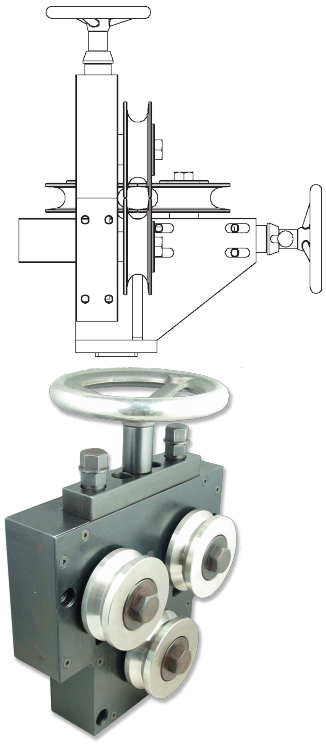

With SL Straightening rollers

Drawing No. 3-400453-00

Subec AB **Hesselmans Torg 5** **SE- 131 54 Nacka** **Sweden** **Phone: +46-8-88 46 33** **Email: info@subec.se** **Web: www.subec.se**

Copyright © 2026 Subec

PRECISION TUBE STRAIGHTENER S100-HW-LT-7

Product range: Ø 15,0-30,0mm

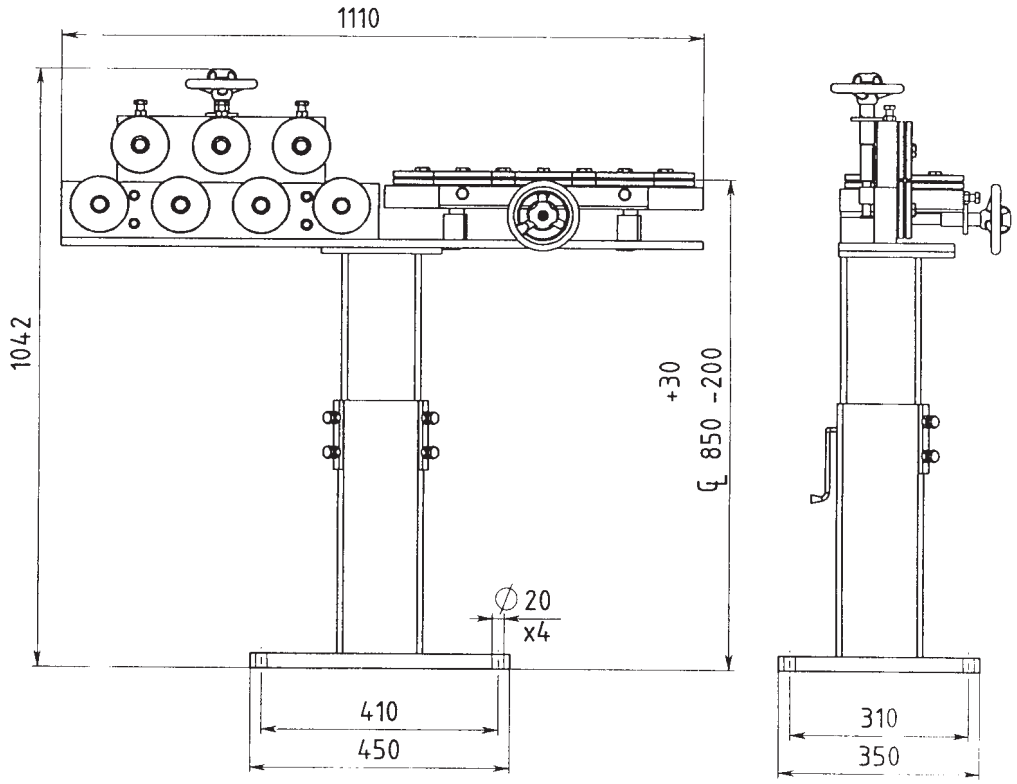

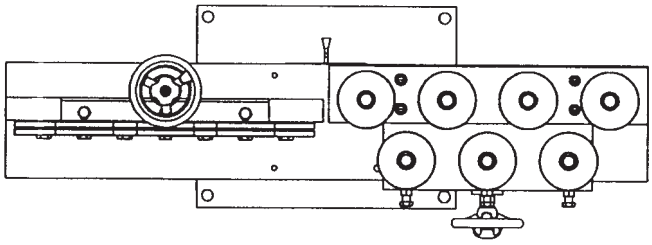



HW-LT = Open/close by handwheel, light execution.

Article: 00842
Weight: 92kg

With SL Straightening rollers

Drawing No. 3-400501-00

Subec AB **Hesselmans Torg 5** **SE- 131 54 Nacka** **Sweden** **Phone: +46-8-88 46 33** **Email: info@subec.se** **Web: www.subec.se**

Copyright © 2026 Subec

WIRE STRAIGHTENER S110-AA-9

Product range: Ø 9,0-23,0mm

AA = All rollers individually adjustable

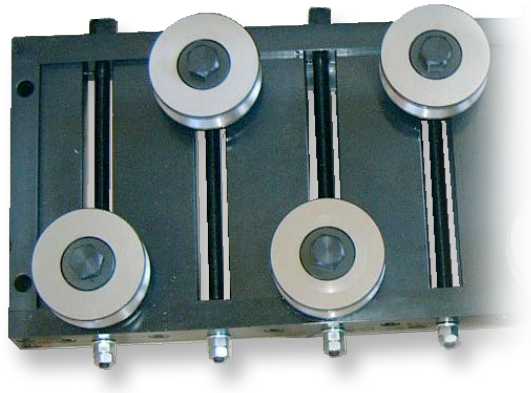

Article: 00996

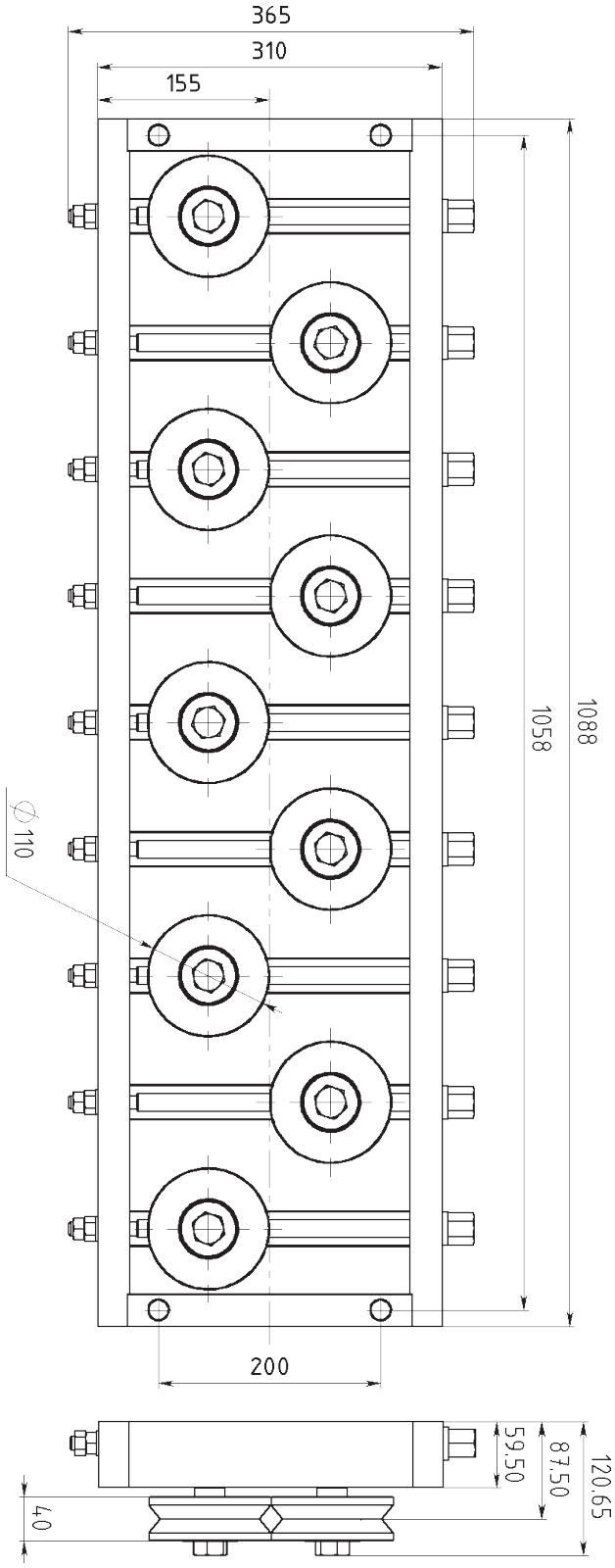

With SL Straightening rollers

Drawing No. 3-400432-00

Subec AB **Hesselmans Torg 5** **SE- 131 54 Nacka** **Sweden** **Phone: +46-8-88 46 33** **Email: info@subec.se** **Web: www.subec.se**

Copyright © 2026 Subec

WIRE STRAIGHTENER S110-TA-5

Product range: Ø 9,0-23,0mm

TA = Top row rollers adjustable

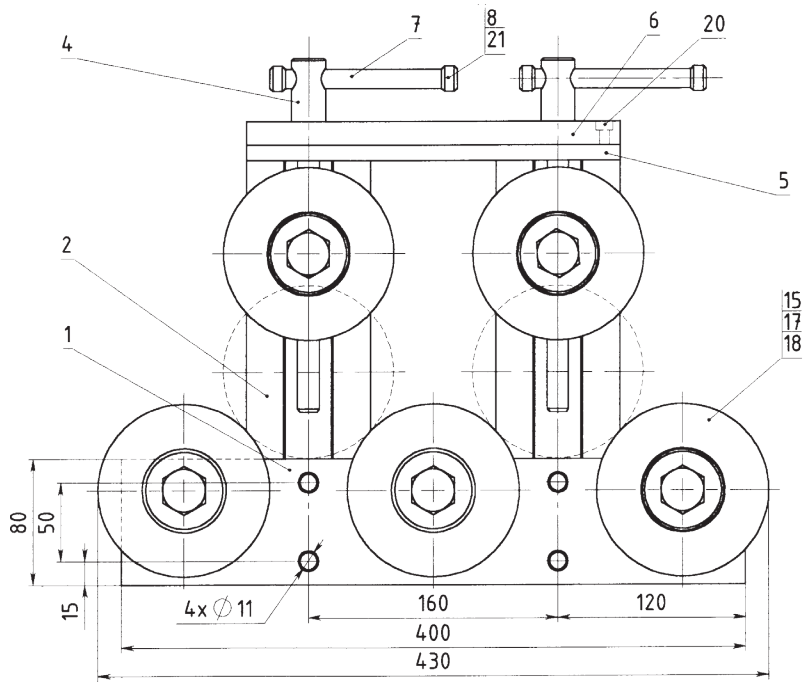

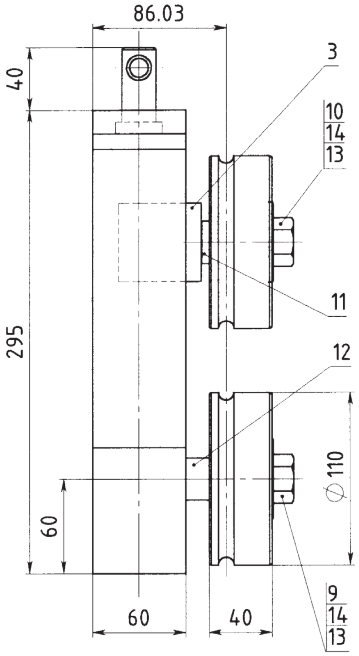

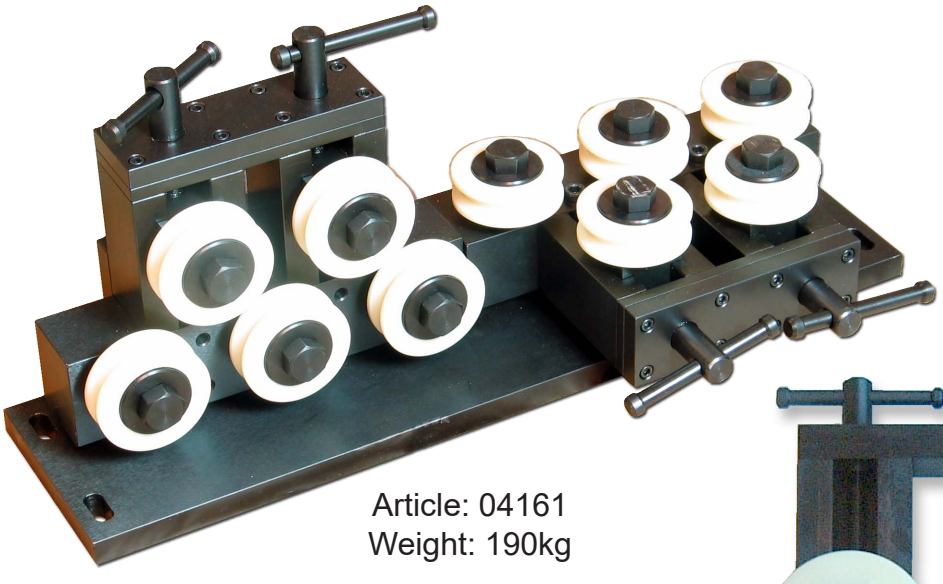

Article: 04161
Weight: 190kg

Article: 00960

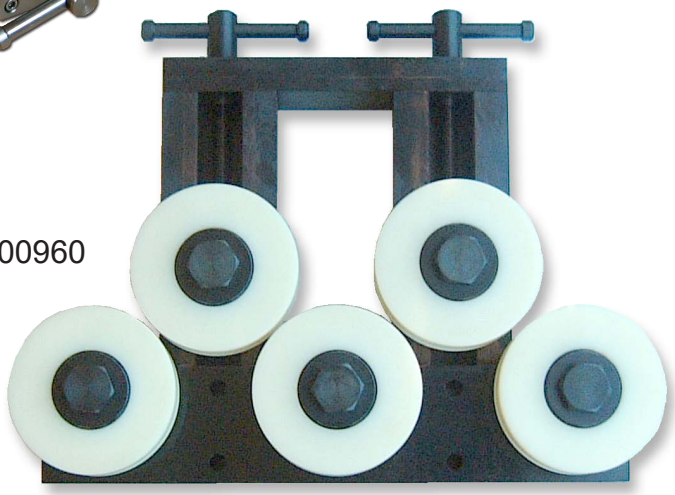

With SL Straightening rollers

Drawing No. 3-300131-00

Subec AB **Hesselmans Torg 5** **SE- 131 54 Nacka** **Sweden** **Phone: +46-8-88 46 33** **Email: info@subec.se** **Web: www.subec.se**

Copyright © 2026 Subec

WIRE STRAIGHTENER S110-HW-5

Product range: Ø 9,00-23,00 mm

HW = Open/close by handwheel

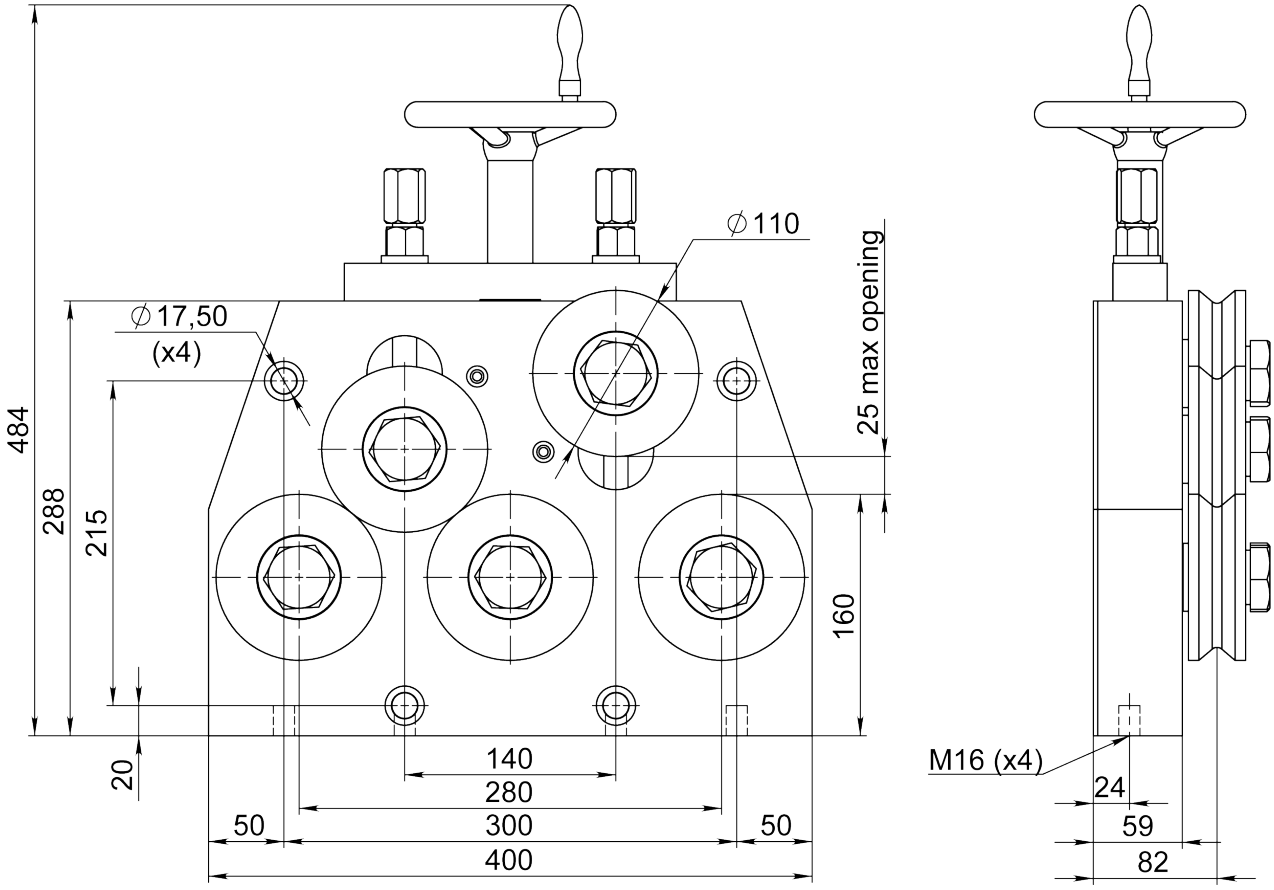

Option: With hydraulic open/close

Article: 8515



With SL Straightening rollers

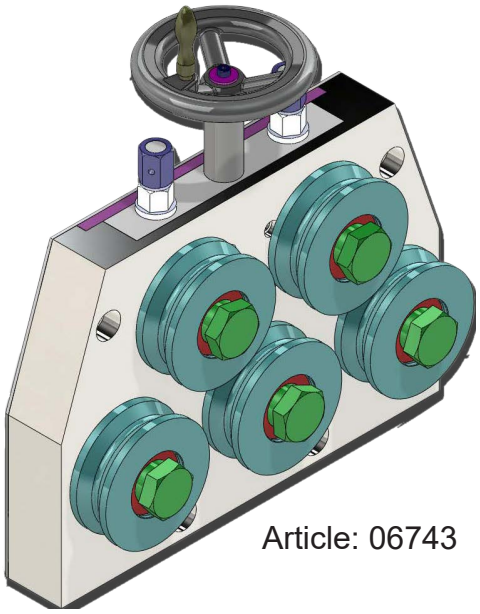

Article: 06743

Drawing No. 3-400867-00

Subec AB
Hesselmans Torg 5
SE- 131 54 Nacka
Sweden
Phone: +46-8-88 46 33
Email: info@subec.se
Web: www.subec.se

Copyright © 2026 Subec

WIRE STRAIGHTENER S115-L-5

Product range: Ø 20,0-31,0mm

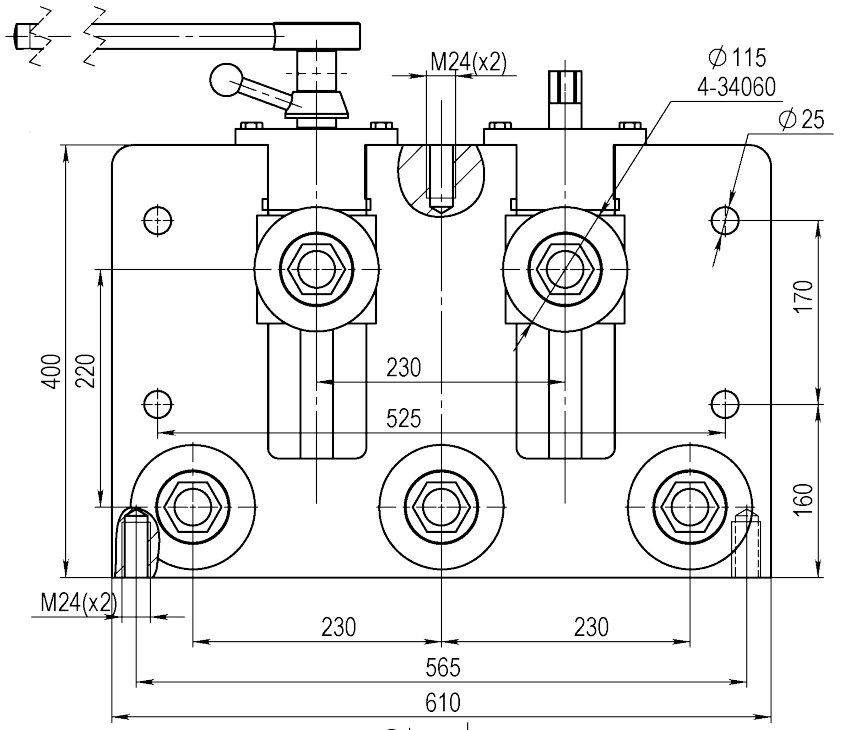

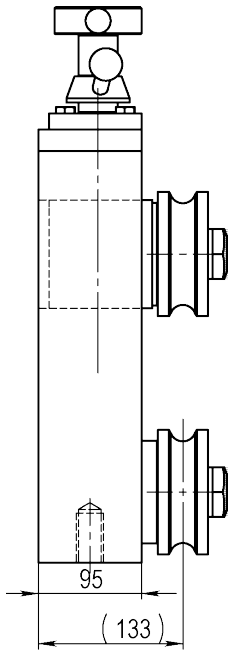

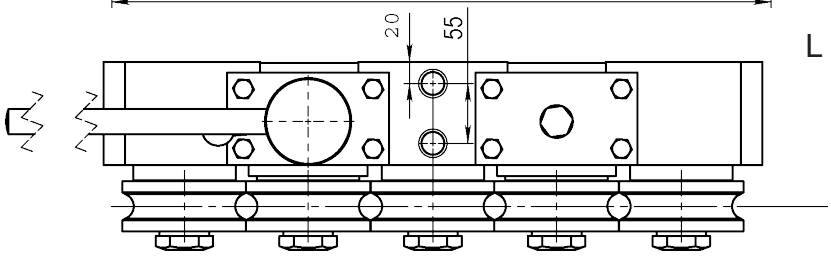

L = Open/close by Lever arm

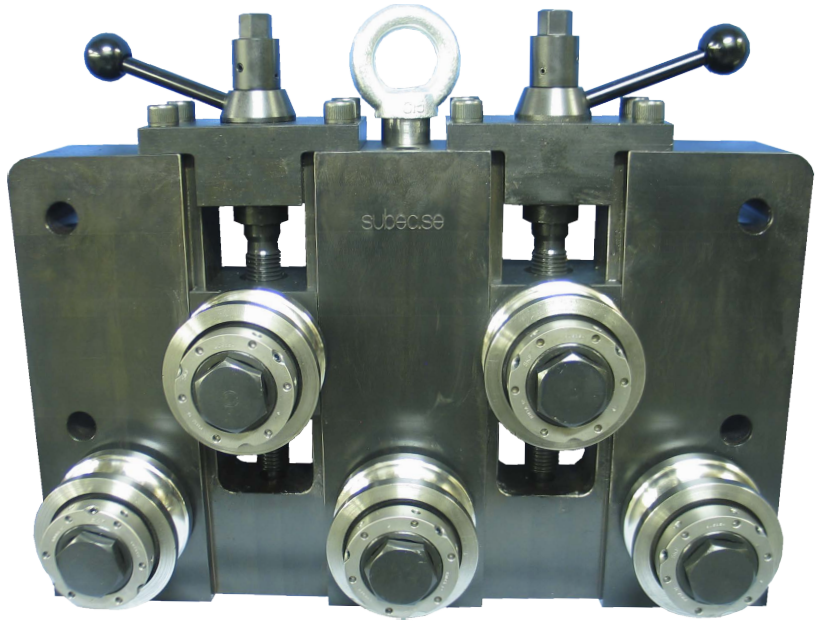

With SL Straightening rollers

Article: 05658

Drawing No. 3-400806-00

Subec AB **Hesselmans Torg 5** **SE- 131 54 Nacka** **Sweden** **Phone: +46-8-88 46 33** **Email: info@subec.se** **Web: www.subec.se**

Copyright © 2026 Subec

WIRE STRAIGHTENER S125-AA-5

Product range: Ø 15,0-28,0mm

AA = All rollers individually adjustable

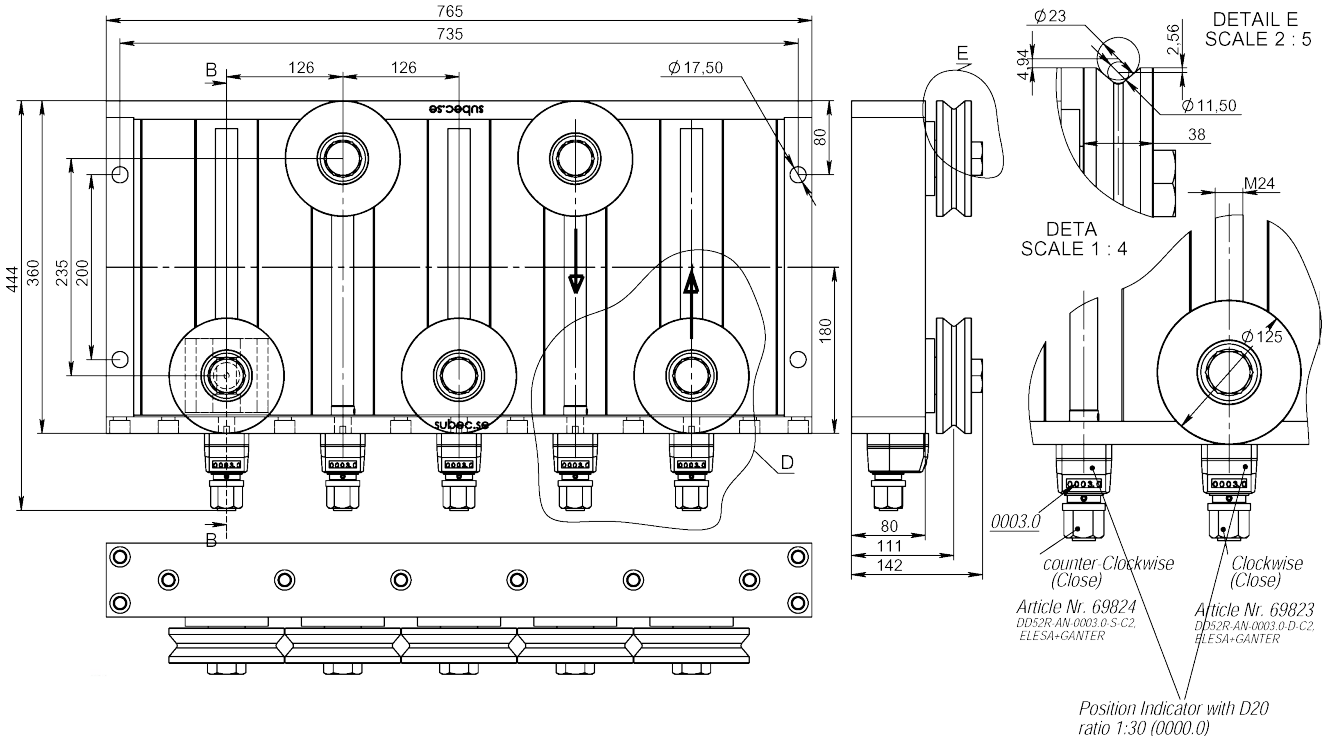

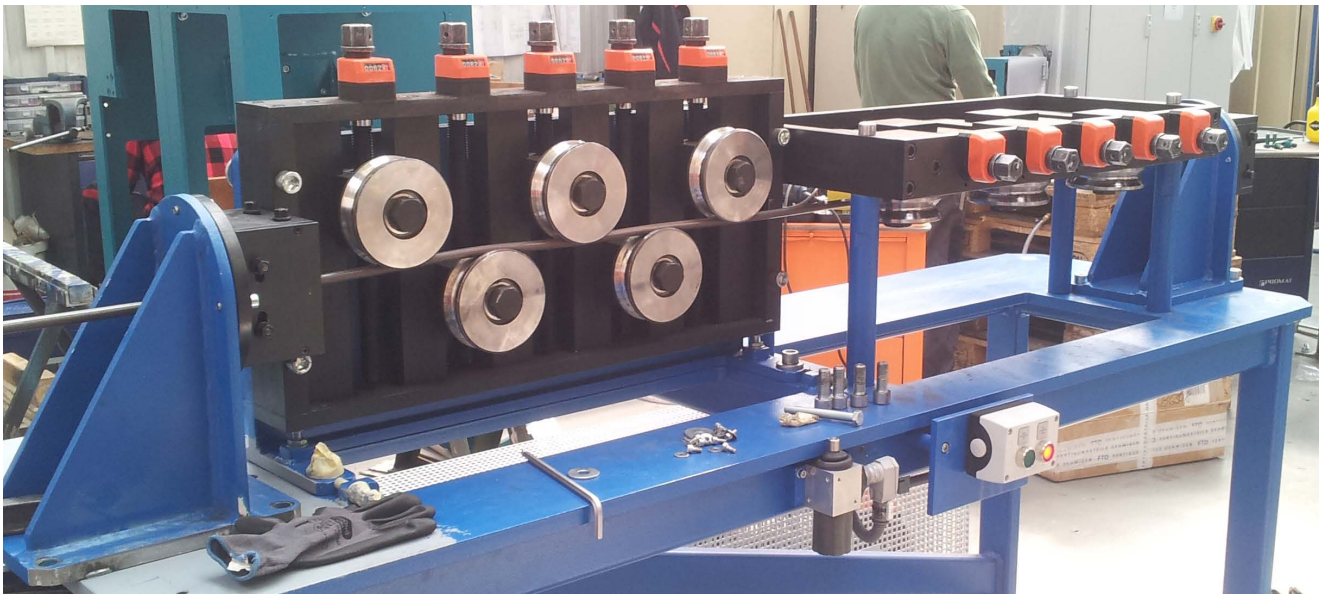

Article: 08659

Drawing No. 3-401110-00

Subec AB **Hesselmans Torg 5** **SE- 131 54 Nacka** **Sweden** **Phone: +46-8-88 46 33** **Email: info@subec.se** **Web: www.subec.se**

Copyright © 2026 Subec

WIRE STRAIGHTENER S125-HW-3

Product range: Ø 15,0-28,0mm

HW = Open/close by handwheel

With SL Straightening rollers

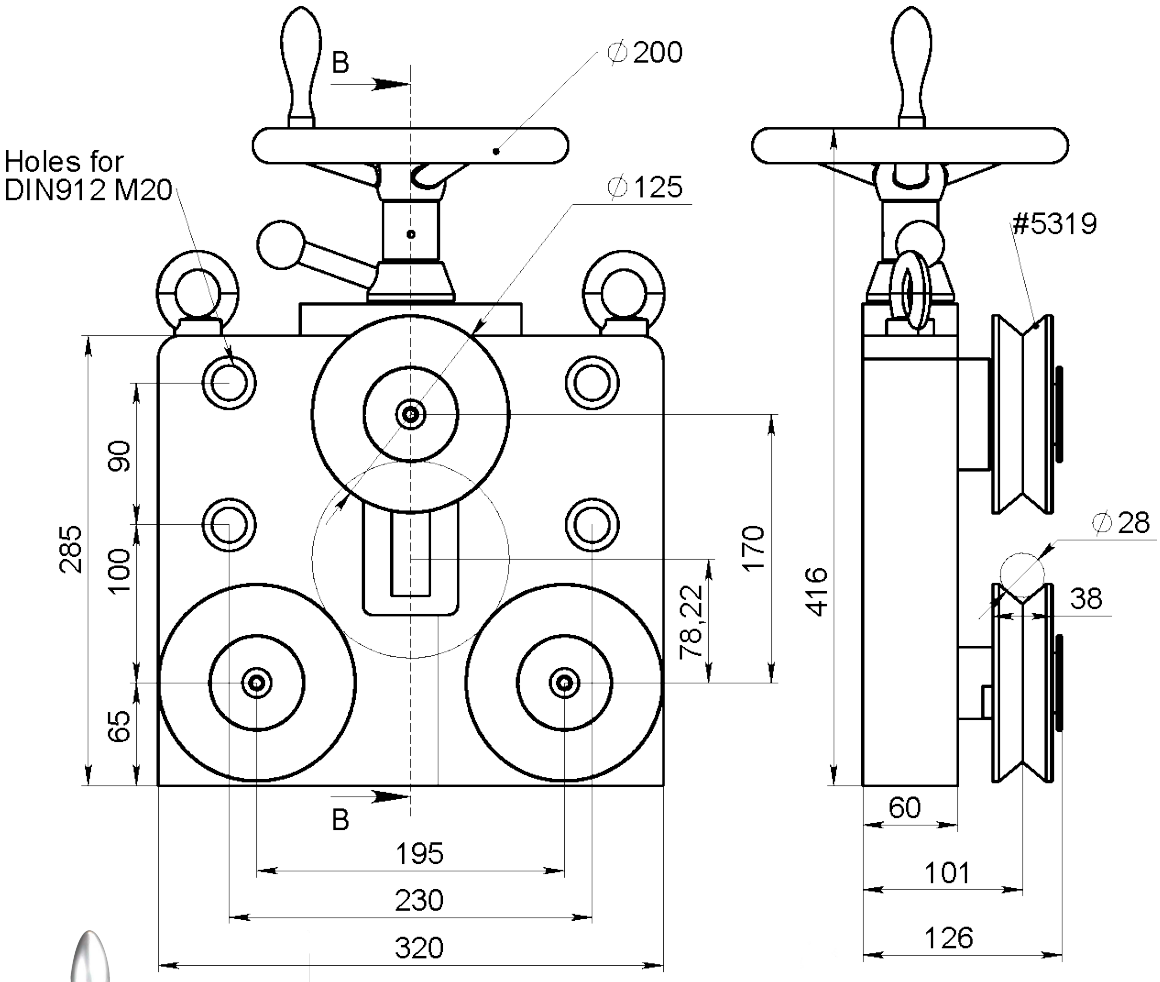



Article: 13594
Weight: 58kg

Drawing No. 3-400769-00

Subec AB **Hesselmans Torg 5** **SE- 131 54 Nacka** **Sweden** **Phone: +46-8-88 46 33** **Email: info@subec.se** **Web: www.subec.se**

Copyright © 2026 Subec

WIRE STRAIGHTENER S130-SY-5

Product range: Ø 15,0-33,0mm

SY = With symmetrical open/close of upper and lower row of rollers to wire centreline.

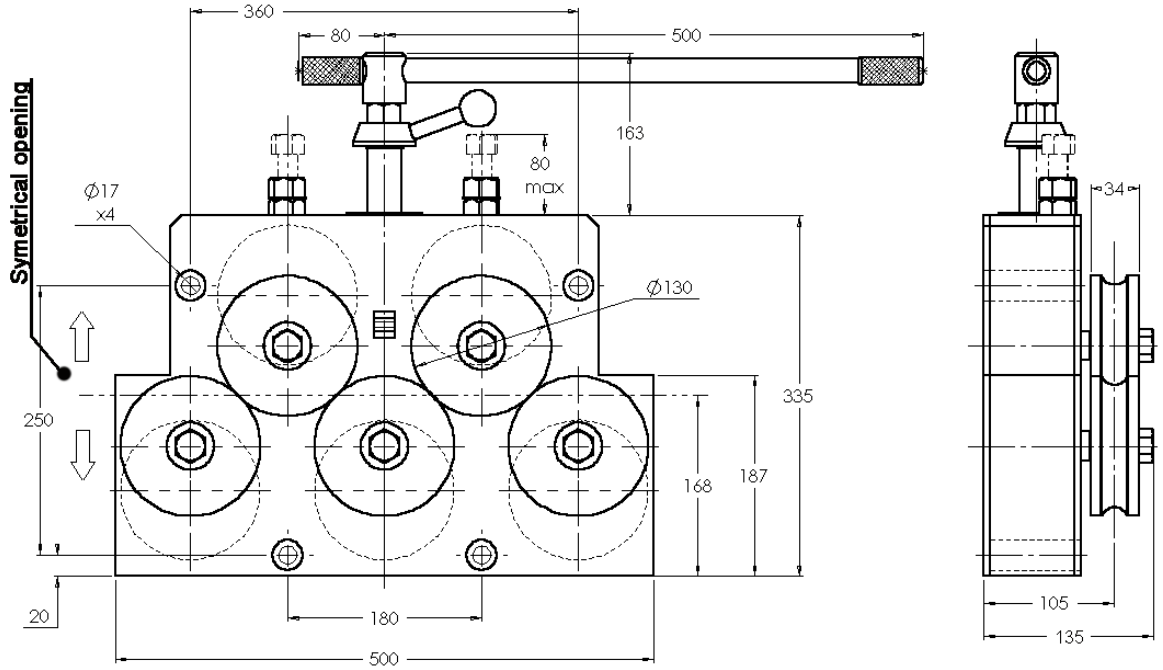



With courtesy of Flymca
Article: 00835
Weight: 160kg

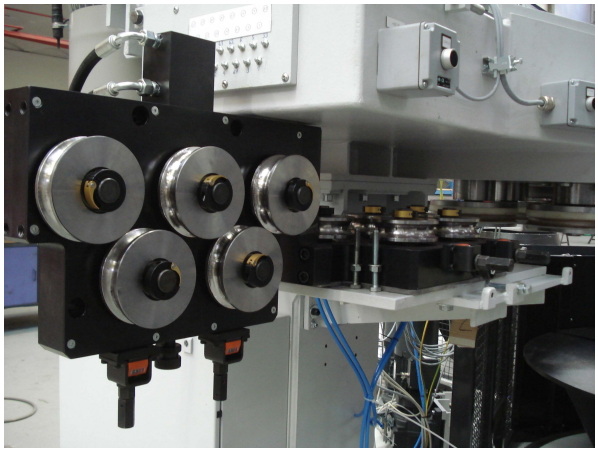

Option: With heavy duty hydraulic open/close
Article: 07697
Weight: 150kg

Scale 

With SL Straightening rollers

Drawing No. 3-400346-00

Subec AB **Hesselmans Torg 5** **SE- 131 54 Nacka** **Sweden** **Phone: +46-8-88 46 33** **Email: info@subec.se** **Web: www.subec.se**

Copyright © 2026 Subec

DRIVEN WIRE STRAIGHTENER
S130-SY-5

Product range: Ø 15,0-33,0mm

SY = With symmetrical open/close of upper and lower row of rollers to wire centreline.

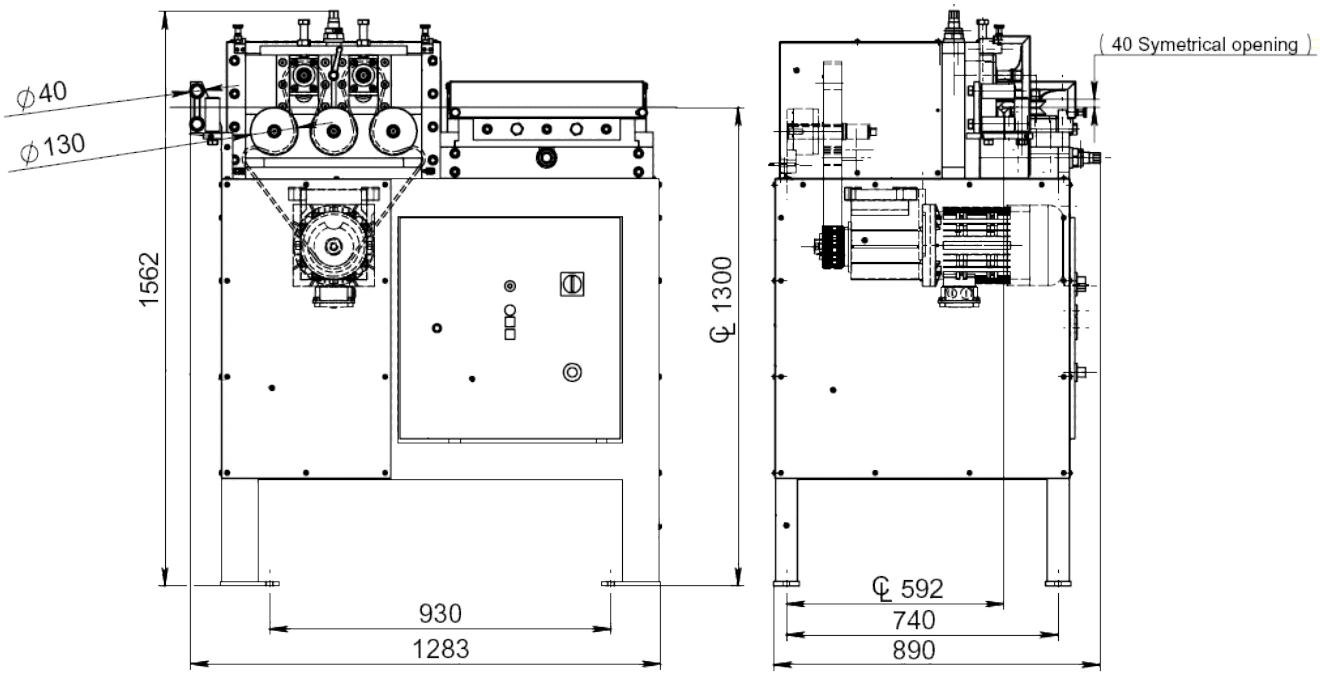

Article: 03283



With SL Straightening rollers

Drawing No. 3-400647-03

Subec AB **Hesselmans Torg 5** **SE- 131 54 Nacka** **Sweden** **Phone: +46-8-88 46 33** **Email: info@subec.se** **Web: www.subec.se**

Copyright © 2026 Subec

WIRE STRAIGHTENER S130-HW-5

Product range: Ø 15,0-33,0mm

HW = Open/close by handwheel

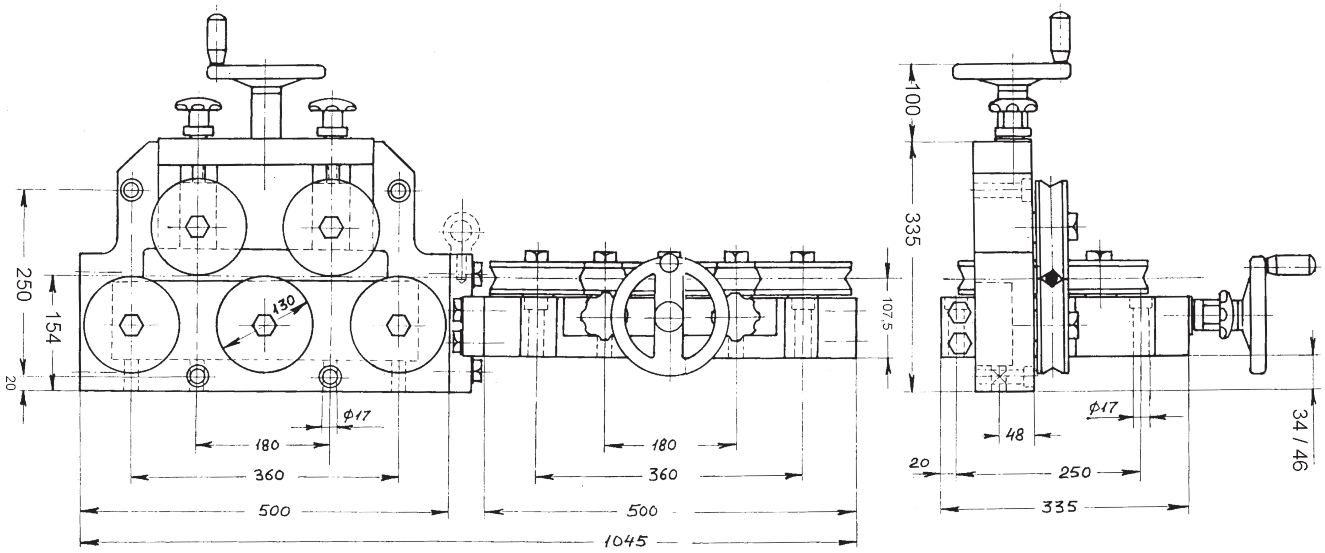

Article: 00610
Weight: 141kg

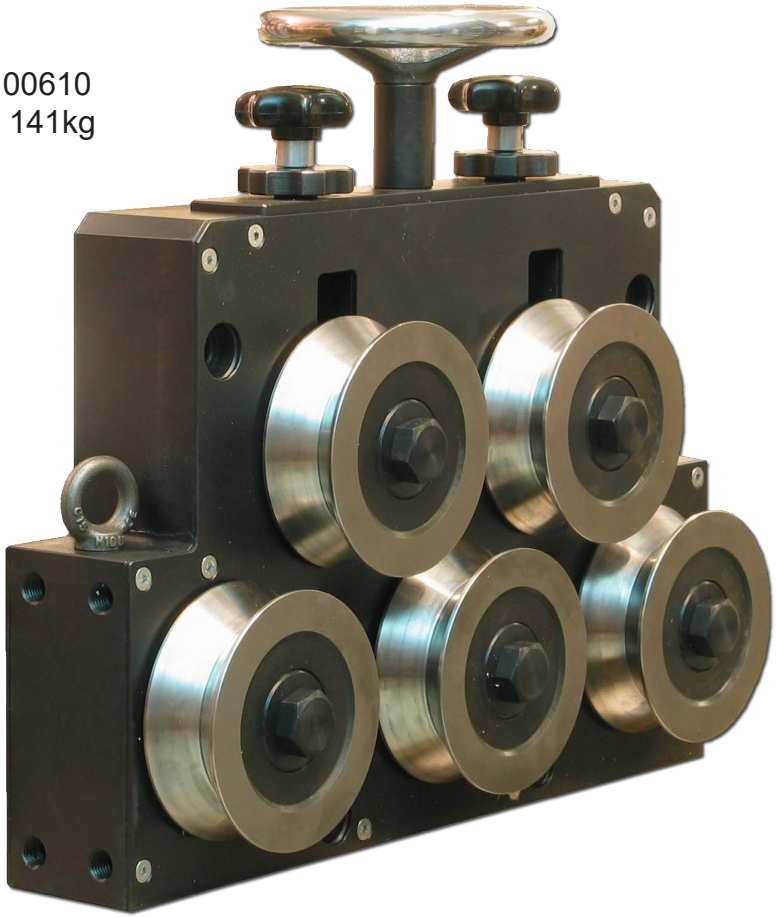

With SL Straightening rollers

Drawing No. 3-400346-00

Subec AB **Hesselmans Torg 5** **SE- 131 54 Nacka** **Sweden** **Phone: +46-8-88 46 33** **Email: info@subec.se** **Web: www.subec.se**

Copyright © 2026 Subec

WIRE STRAIGHTENER S130-HW-7

Product range: Ø 15,0-33,0mm

HW = Open/close by handwheel

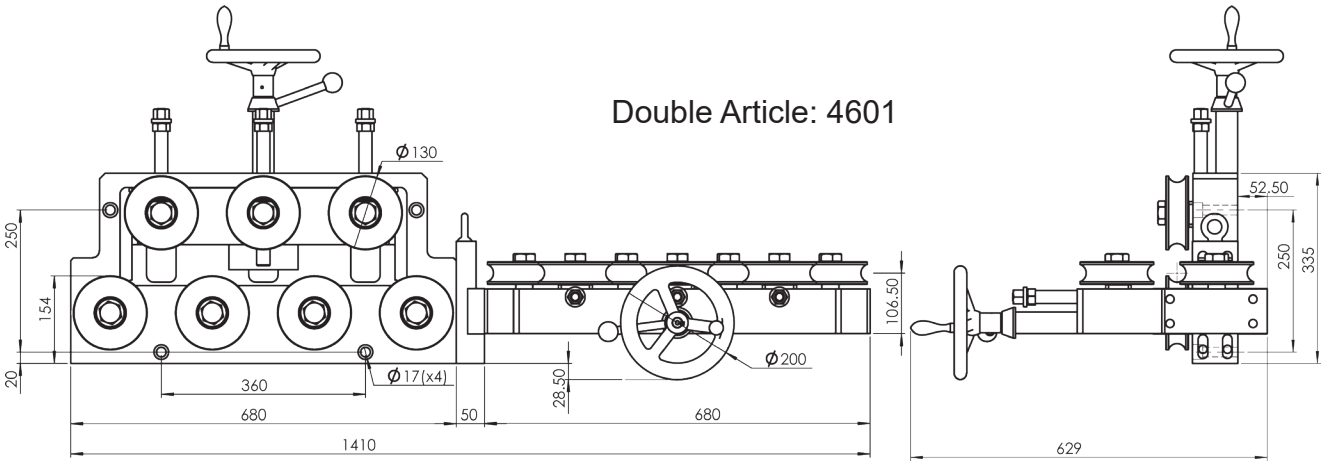

Double Article: 4601

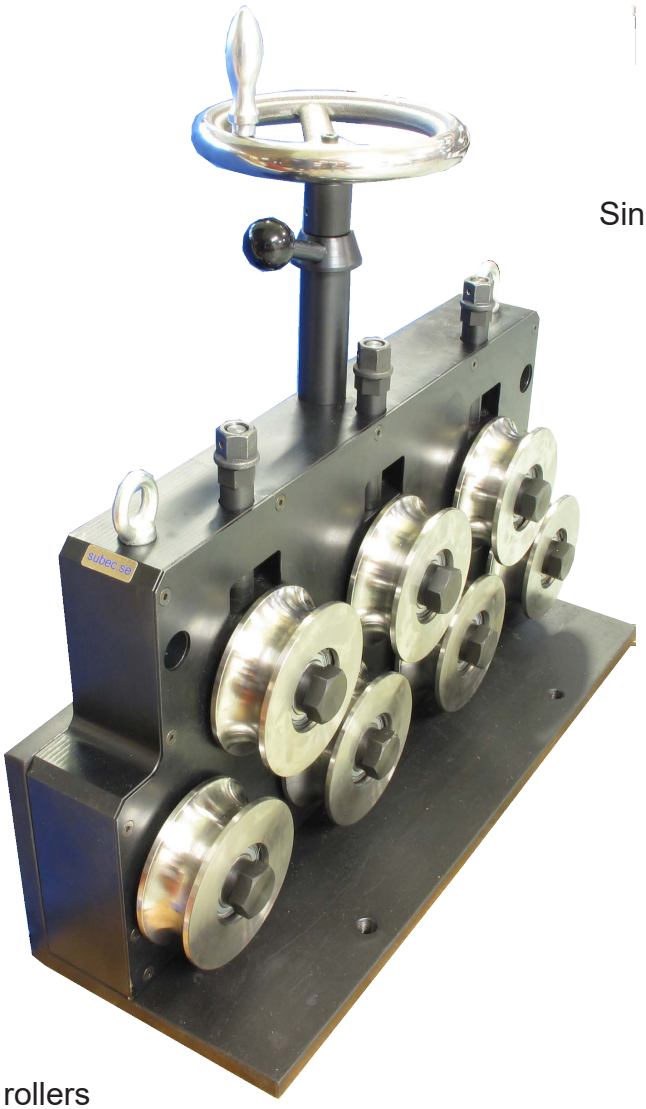

Single Article: 04626

With SL Straightening rollers

Drawing No. 3-400346-00

Subec AB **Hesselmans Torg 5** **SE- 131 54 Nacka** **Sweden** **Phone: +46-8-88 46 33** **Email: info@subec.se** **Web: www.subec.se**

Copyright © 2026 Subec

WIRE STRAIGHTENER S130-HW-5

Product range: Ø 20,0-65,0mm

HW = Open/close by handwheel

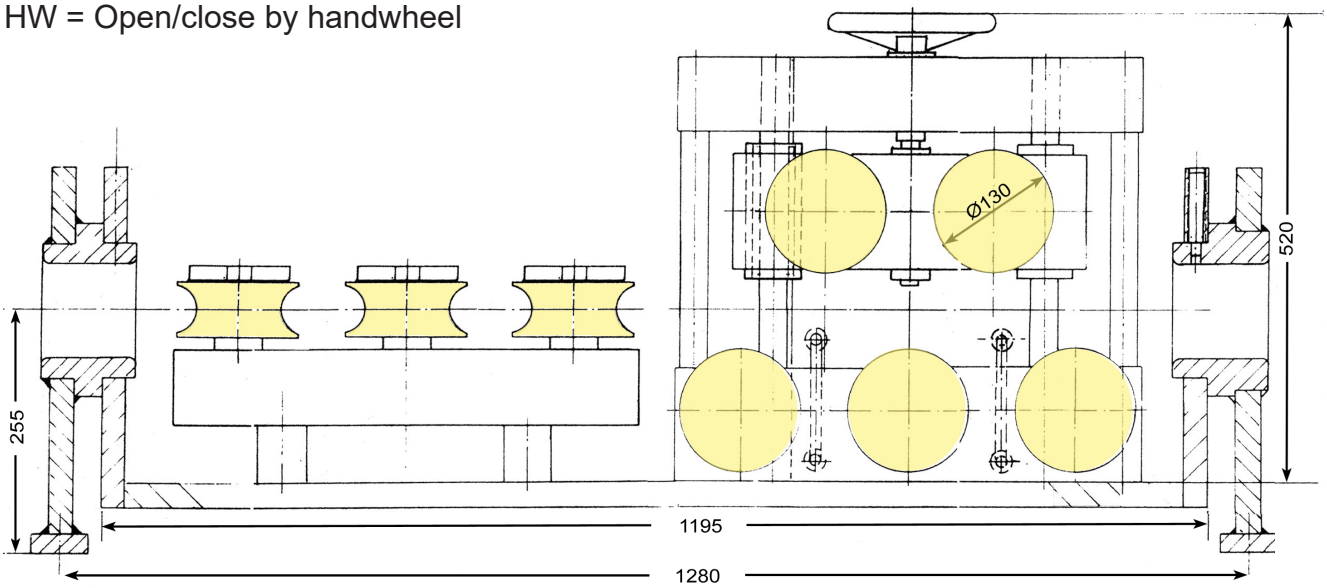

Option: Rotating

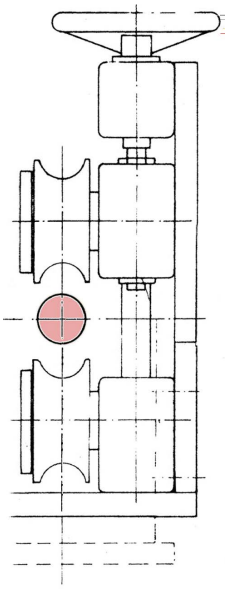

Article: 03987

With SL Straightening rollers

Drawing No. 3-100030-00

Subec AB **Hesselmans Torg 5** **SE- 131 54 Nacka** **Sweden** **Phone: +46-8-88 46 33** **Email: info@subec.se** **Web: www.subec.se**

Copyright © 2026 Subec

WIRE STRAIGHTENER S130-HW-SY-5

Product range: Ø 20,0-65,0mm

HW-SY = Open/close symmetric to centreline by handwheel

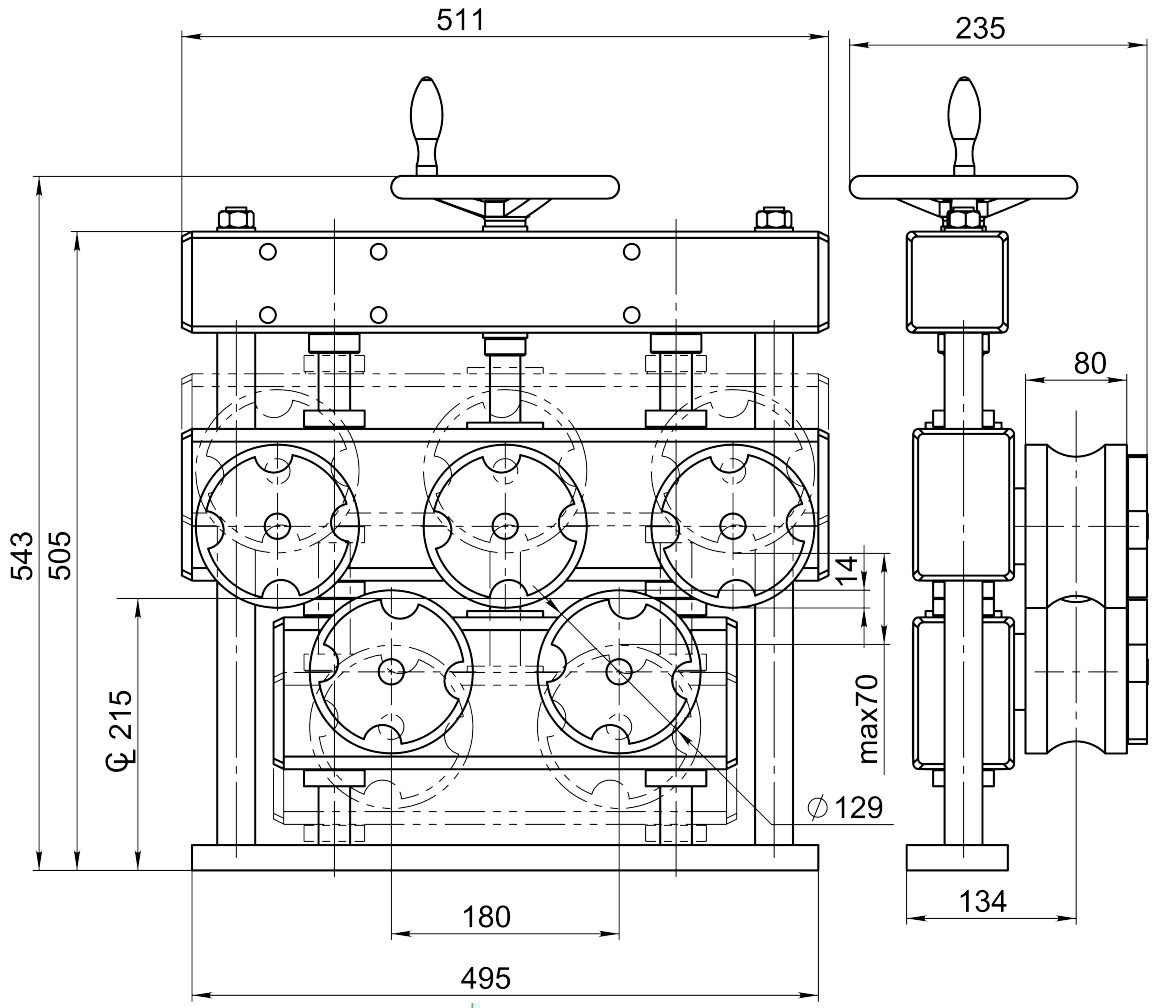

Article: 05342

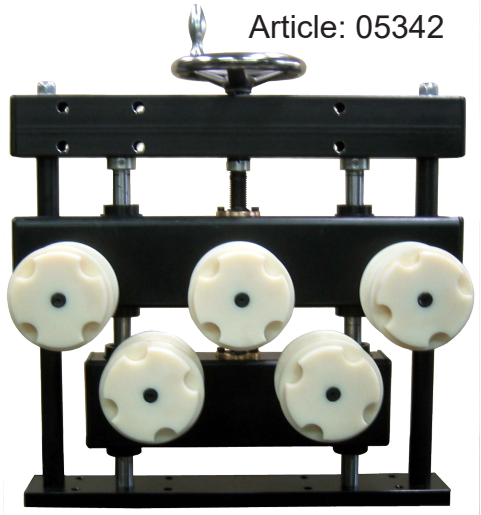

With SL Straightening rollers

Option:
Double unit with Stand
Article: 7467



Drawing No. 3-400781-00

Subec AB **Hesselmans Torg 5** **SE- 131 54 Nacka** **Sweden** **Phone: +46-8-88 46 33** **Email: info@subec.se** **Web: www.subec.se**

Copyright © 2026 Subec

SMOOTHENING STRAIGHTENER S130-HW-SY-5

Product range: Ø 20,0-65,0mm

HW-SY = Open/close symmetric to centreline by handwheel
Tilting adjustment

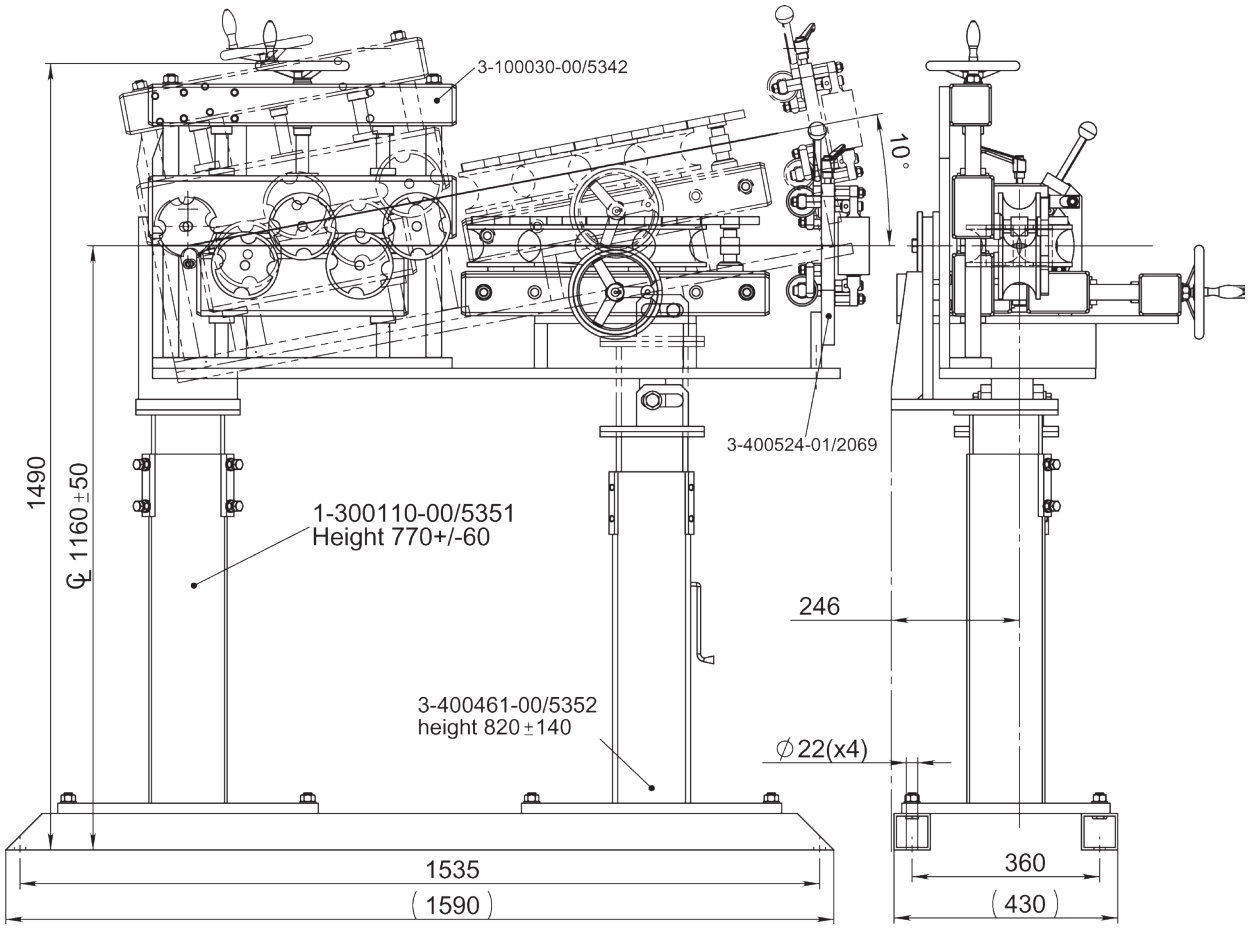



Article: 05299

With SL Straightening rollers

Drawing No. 3-400779-00

Subec AB **Hesselmans Torg 5** **SE- 131 54 Nacka** **Sweden** **Phone: +46-8-88 46 33** **Email: info@subec.se** **Web: www.subec.se**

Copyright © 2026 Subec

HEAVY DUTY WIRE STRAIGHTENER
S150-SY-5

Product range: Ø 15,0-45,0mm

SY = With symmetrical open/close of upper and lower row of rollers to wire centreline.

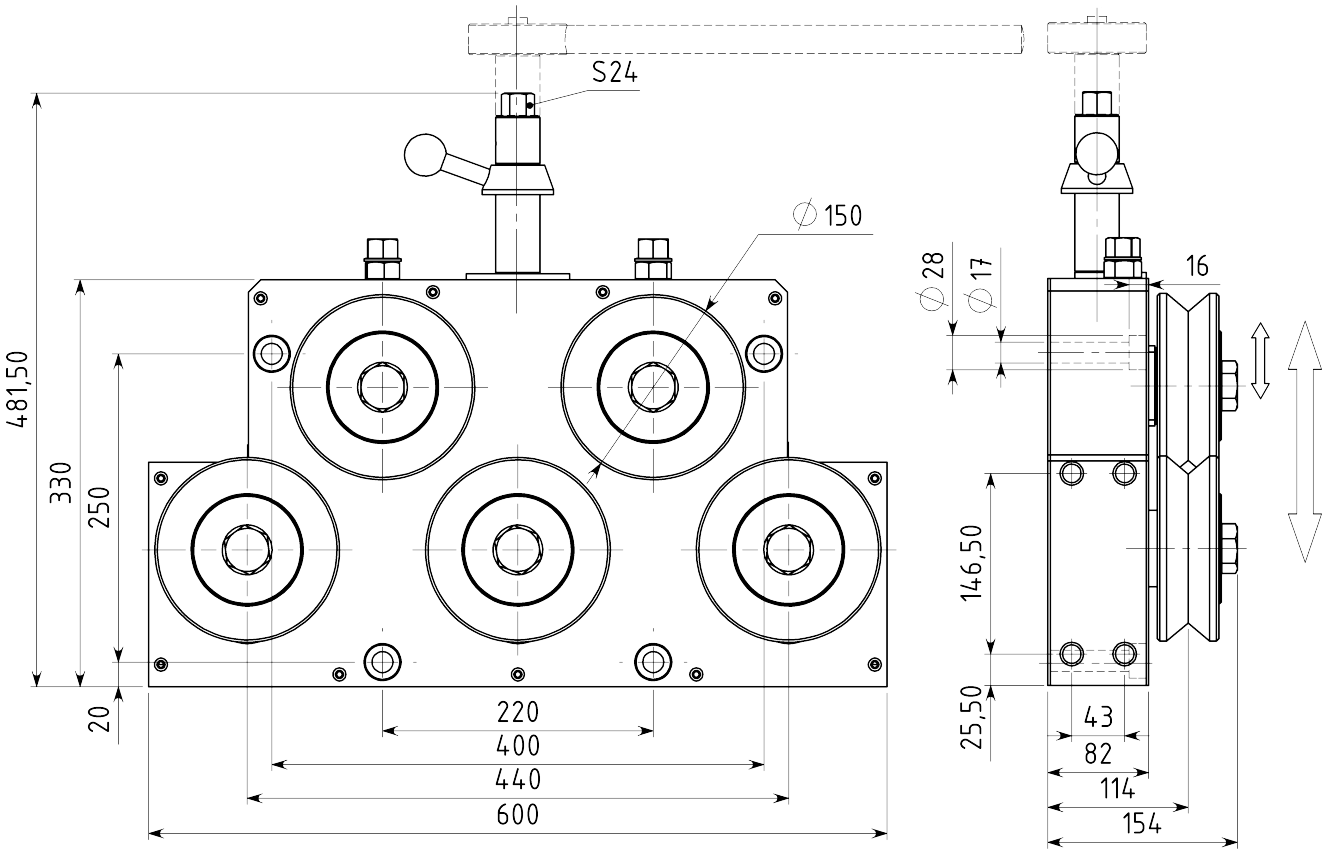

Single System
Article: 02221
Weight: 93kg

Option: With Gearbox and Position Indicator
Article: 04968
Weight: 262kg

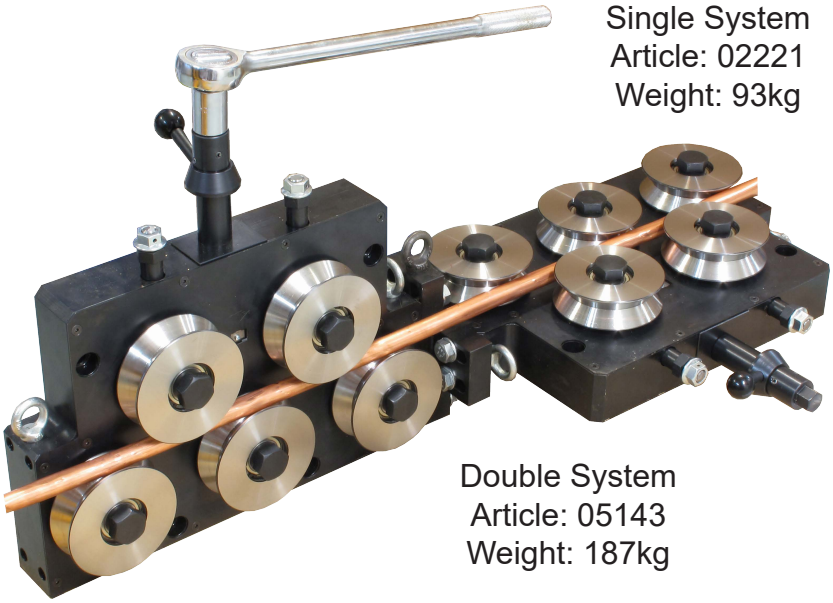

With SL Straightening rollers

Double System
Article: 05143
Weight: 187kg



Drawing No. 3-400548-00

Subec AB **Hesselmans Torg 5** **SE- 131 54 Nacka** **Sweden** **Phone: +46-8-88 46 33** **Email: info@subec.se** **Web: www.subec.se**

Copyright © 2026 Subec

WIRE STRAIGHTENER S150-TA-5

Product range: Ø -80,0mm

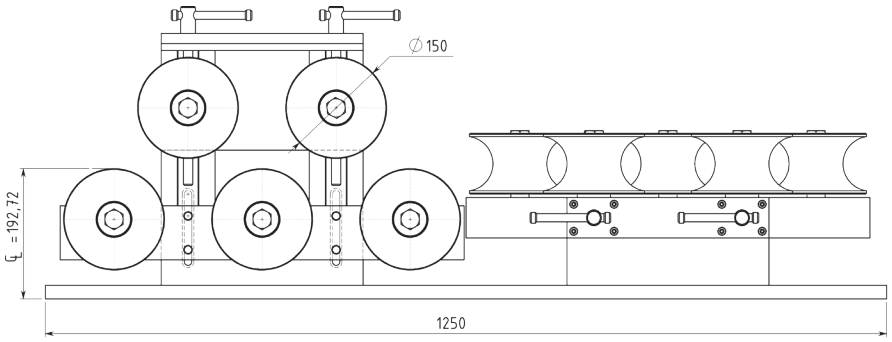

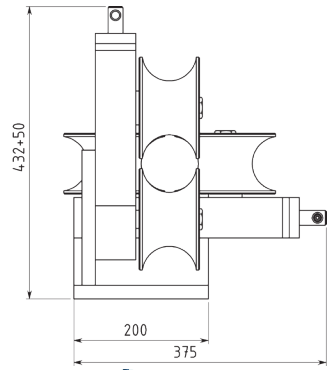

TA = Top row rollers adjustable

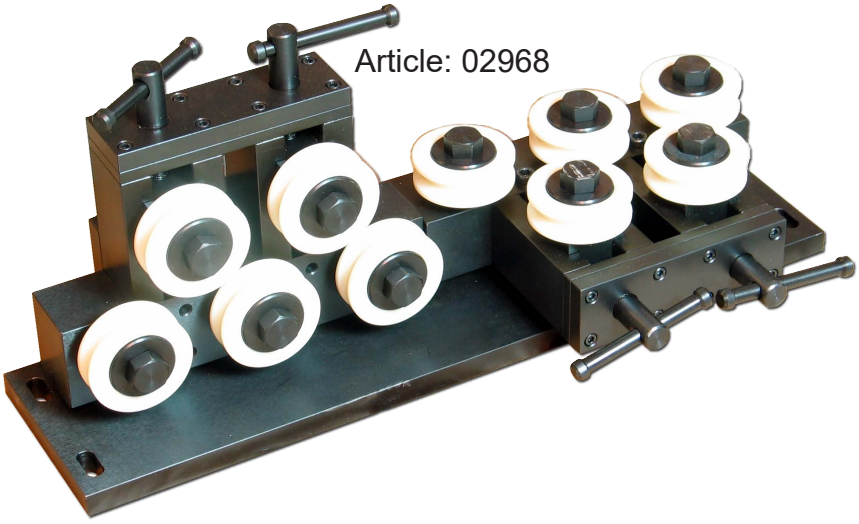

Article: 02968

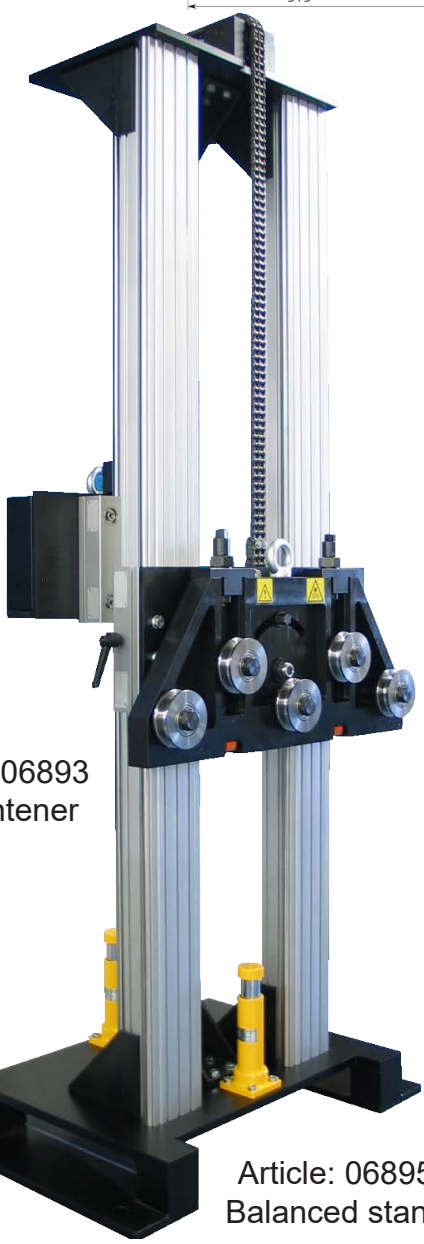

Article: 06893
Straightener

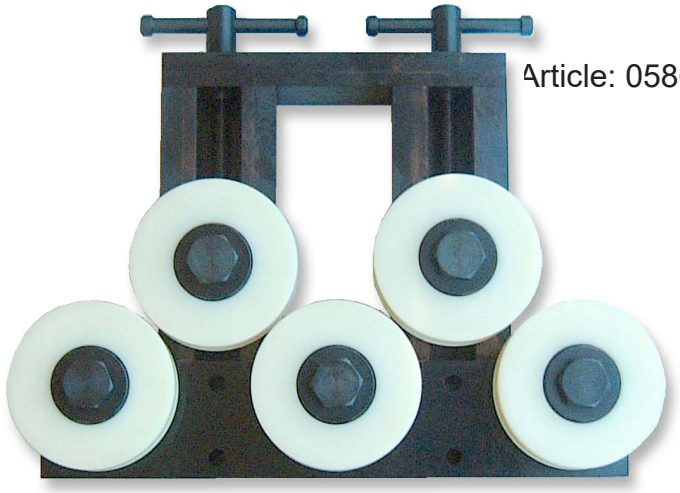

Article: 05863

Article: 06895
Balanced stand

With SL Straightening rollers

Drawing No. 3-300131-00

Subec AB **Hesselmans Torg 5** **SE- 131 54 Nacka** **Sweden** **Phone: +46-8-88 46 33** **Email: info@subec.se** **Web: www.subec.se**

Copyright © 2026 Subec

FORMING STATION S300-SY-5

Product range: Ø 60,0-180,0mm

SY = With symmetrical open/close of upper and lower row of rollers to wire centreline.

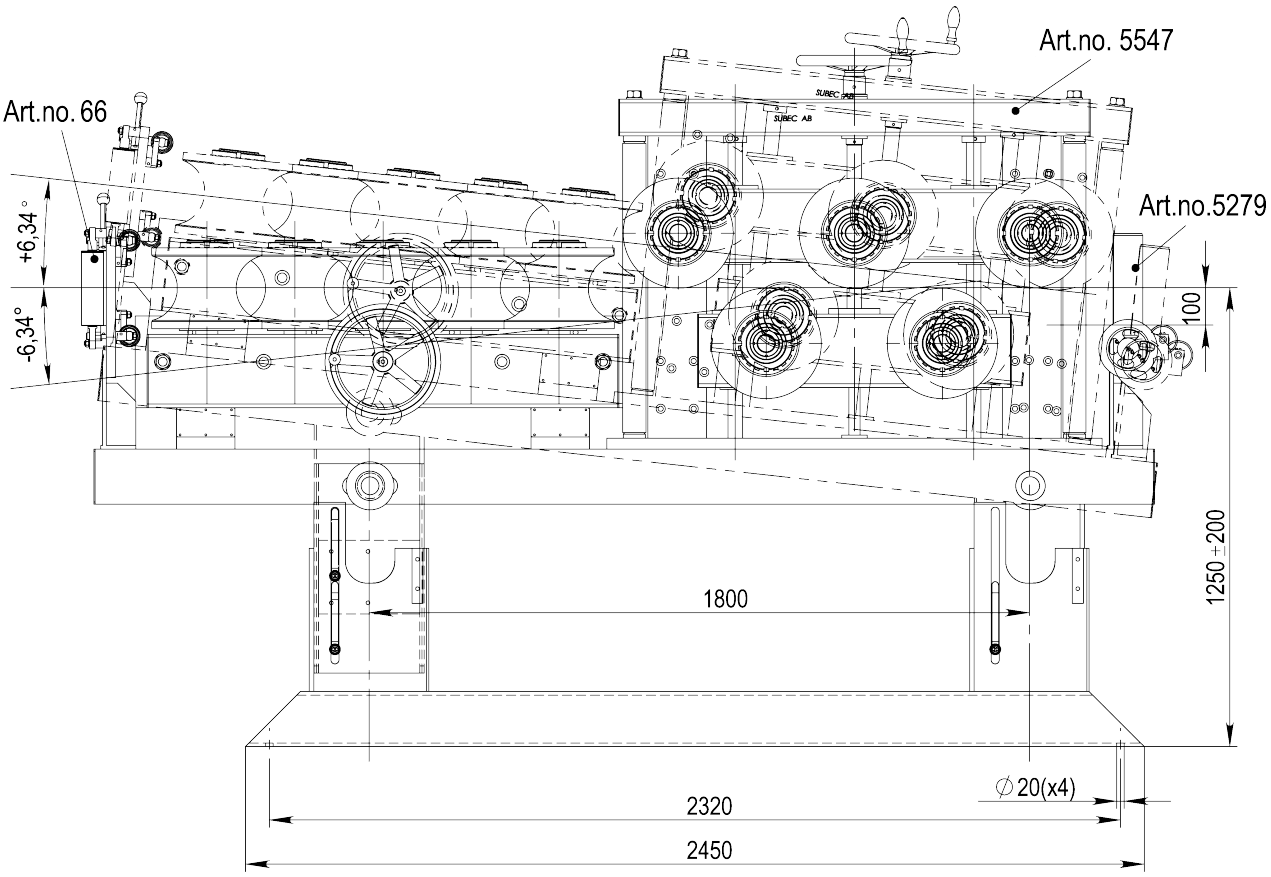

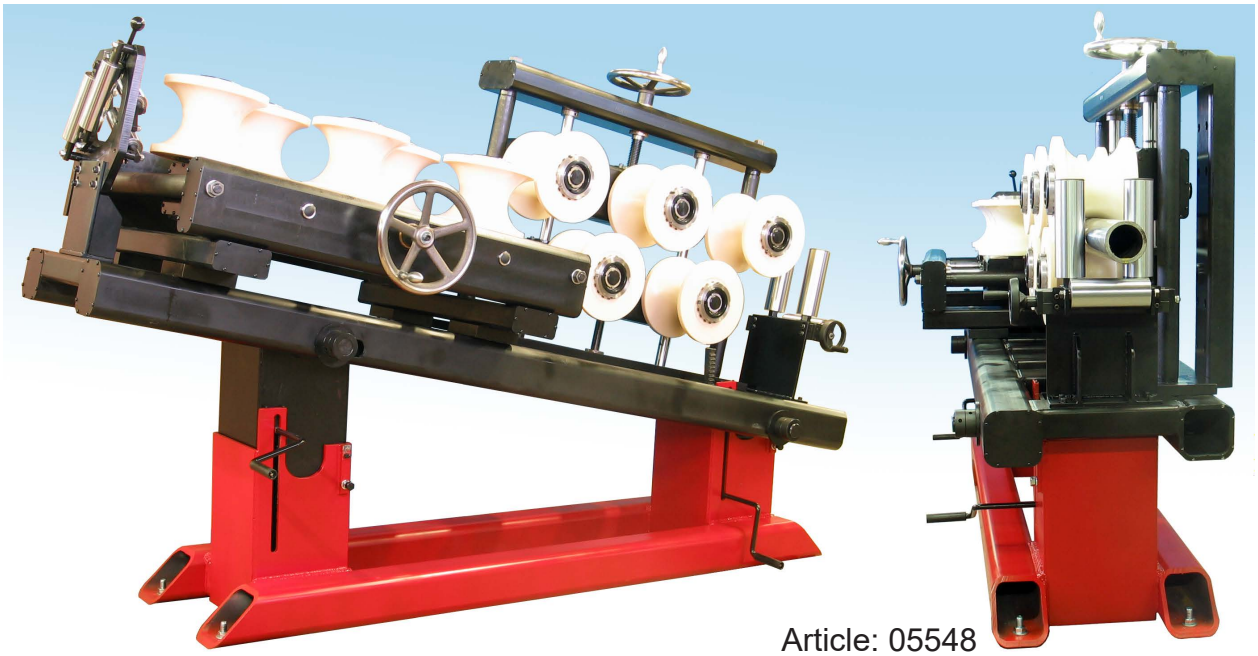

Article: 05548

With SL Straightening rollers

Drawing No. 3-400795-00

Subec AB **Hesselmans Torg 5** **SE- 131 54 Nacka** **Sweden** **Phone: +46-8-88 46 33** **Email: info@subec.se** **Web: www.subec.se**

Copyright © 2026 Subec

COIL BENDING MACHINE, DRIVEN CB20

Product range: Ø -20,0mm

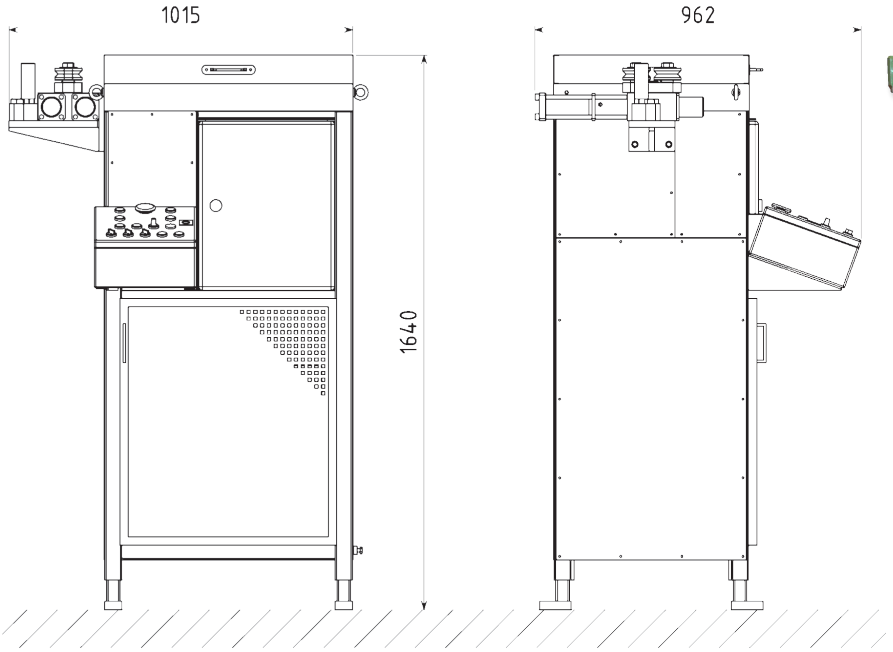



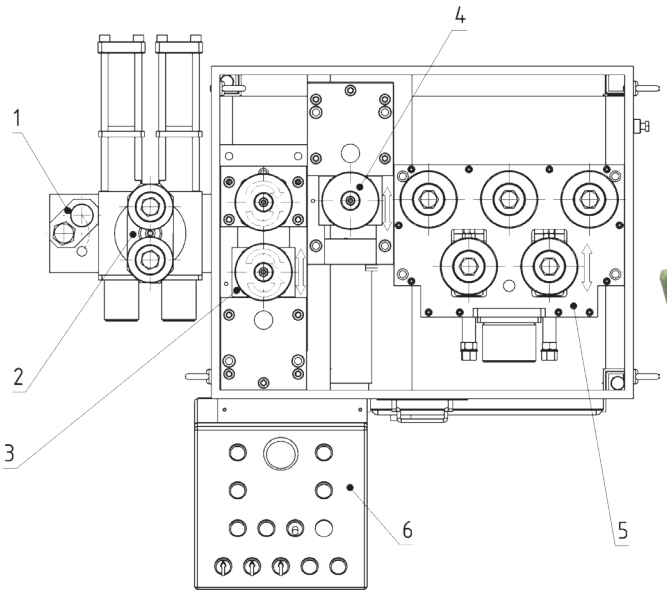



Article: 02397

With SL Straightening rollers

Drawing No. 3-400527-00

Subec AB **Hesselmans Torg 5** **SE- 131 54 Nacka** **Sweden** **Phone: +46-8-88 46 33** **Email: info@subec.se** **Web: www.subec.se**

Copyright © 2026 Subec

TAPE GUIDE

Max Product width: 25mm

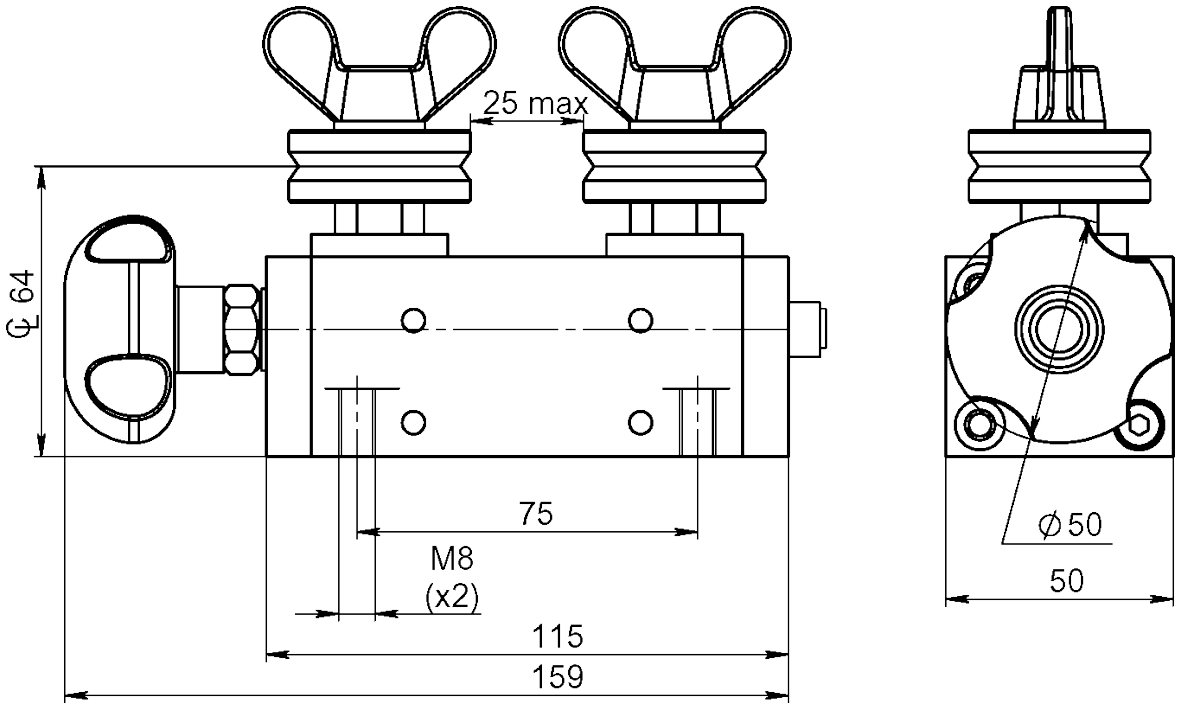

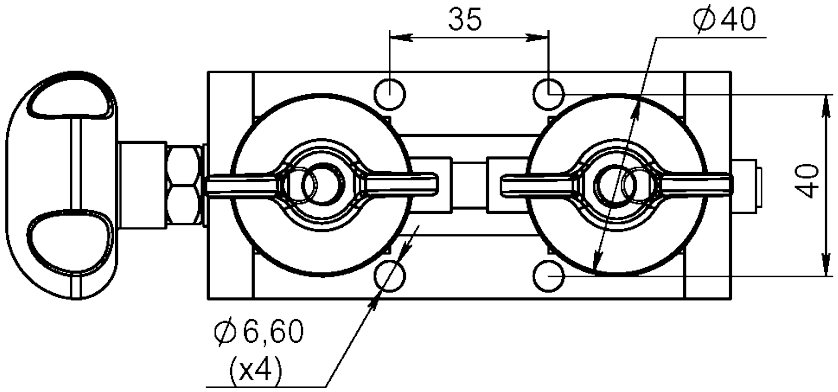

Option: Various Roller types, spring loaded.

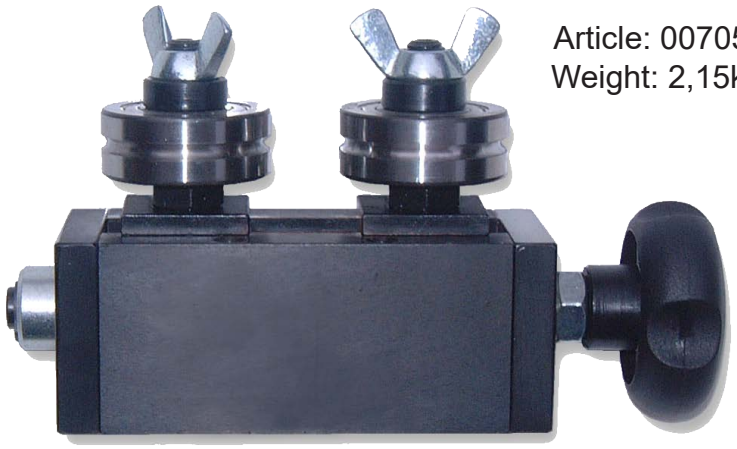

Article: 00705*
Weight: 2,15kg

Drawing No. 3-300106-00

* Stock item

Subec AB **Hesselmans Torg 5** **SE- 131 54 Nacka** **Sweden** **Phone: +46-8-88 46 33** **Email: info@subec.se** **Web: www.subec.se**

Copyright © 2026 Subec

TAPE GUIDE

Max Product width: 50mm

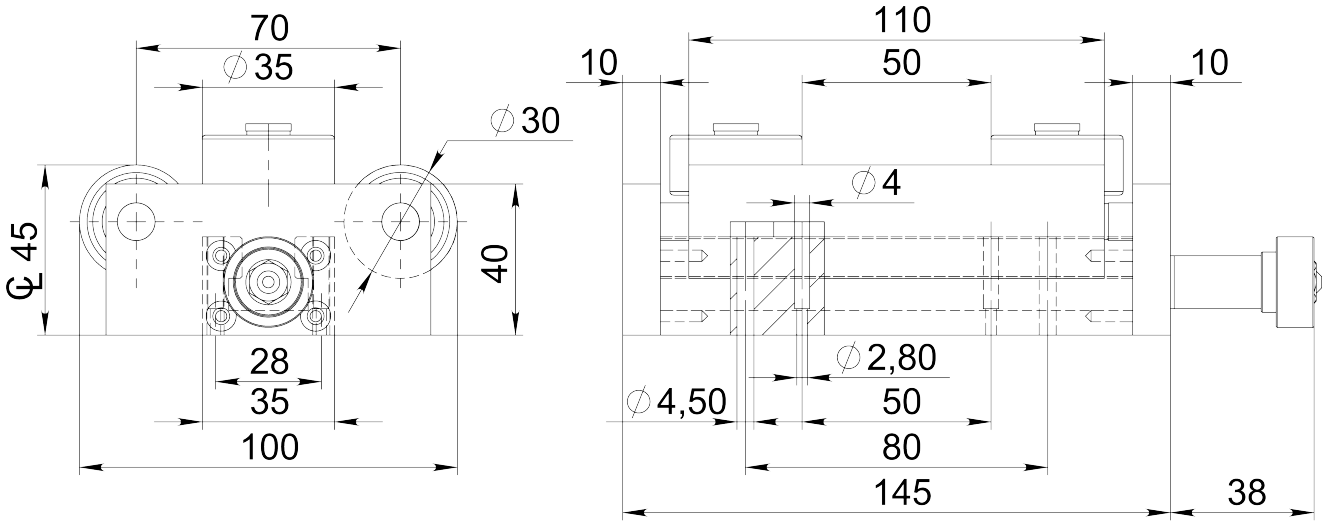

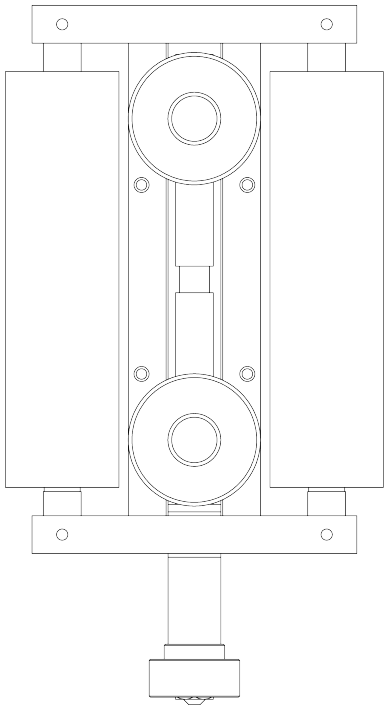



Article: 03305*
Weight: 2kg

Drawing No. 3-300117-00

* Stock item

Subec AB **Hesselmans Torg 5** **SE- 131 54 Nacka** **Sweden** **Phone: +46-8-88 46 33** **Email: info@subec.se** **Web: www.subec.se**

Copyright © 2026 Subec

TAPE GUIDE

Max Product width: 80-120mm

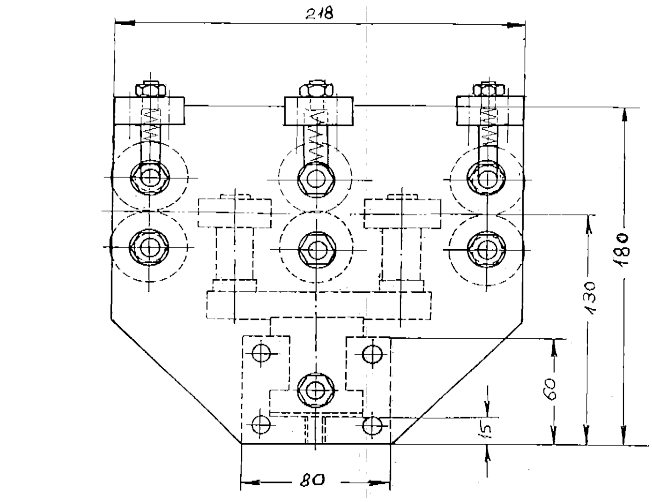

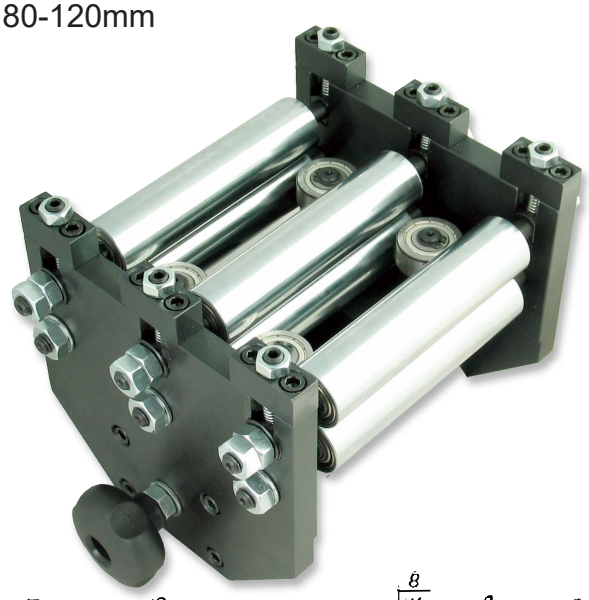

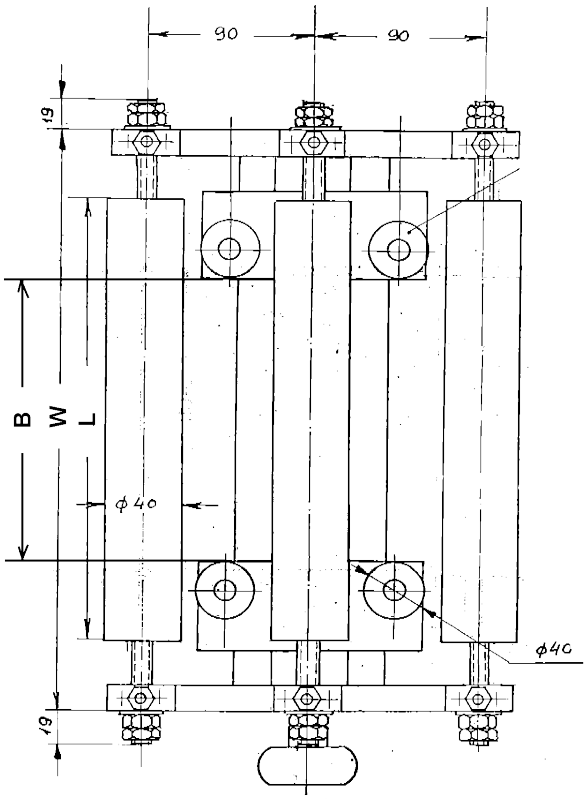

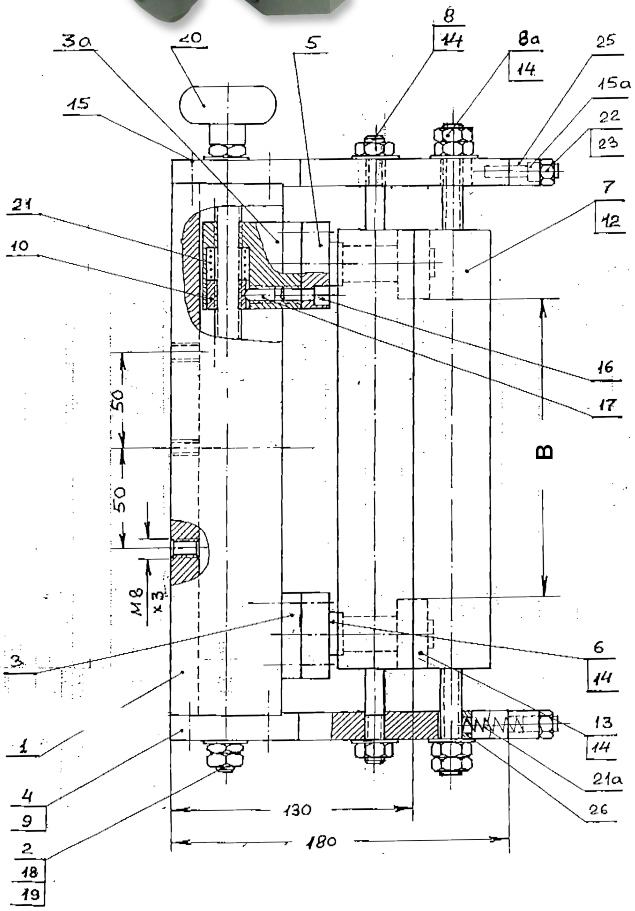

Article	Drawing No.	B	L	W	Weight
02606	**3-400589-00**	80	125	205	14kg
02534	**3-400582-00**	120	175	255	

Subec AB **Hesselmans Torg 5** **SE- 131 54 Nacka** **Sweden** **Phone: +46-8-88 46 33** **Email: info@subec.se** **Web: www.subec.se**

Copyright © 2026 Subec

TAPE GUIDE

Max Product width: 90mm

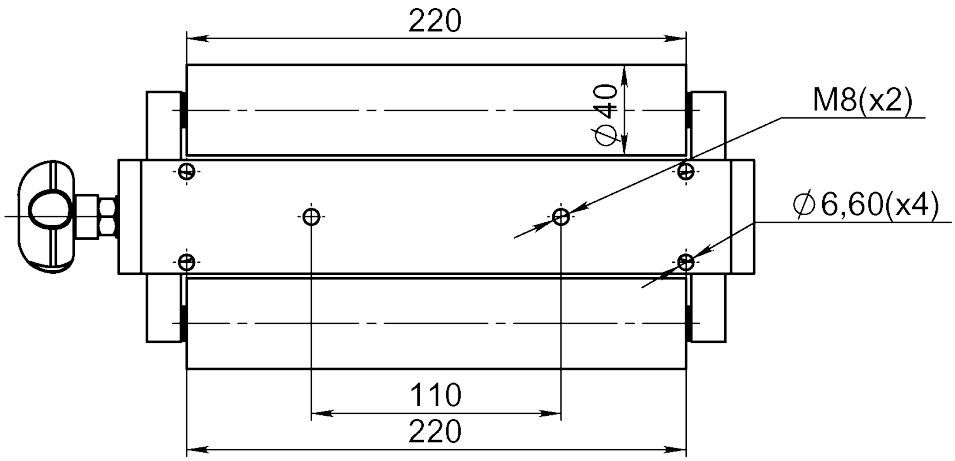

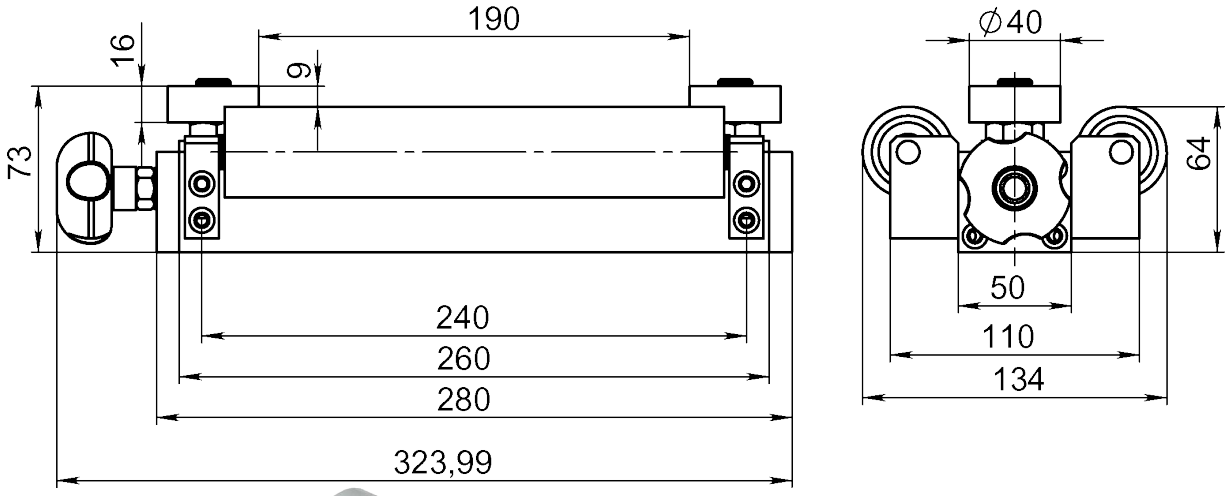



Article: 03085

Drawing No. 3-200017-00

Subec AB **Hesselmans Torg 5** **SE- 131 54 Nacka** **Sweden** **Phone: +46-8-88 46 33** **Email: info@subec.se** **Web: www.subec.se**

Copyright © 2026 Subec

TAPE GUIDE

Max Product width: 97mm

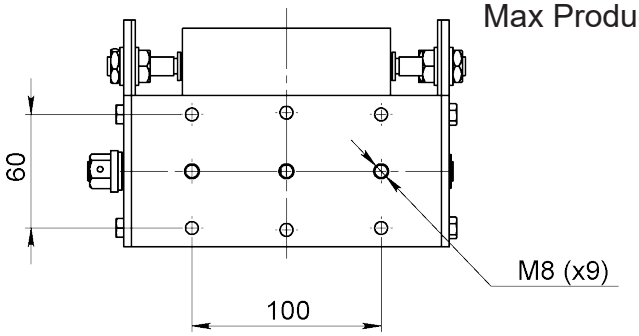

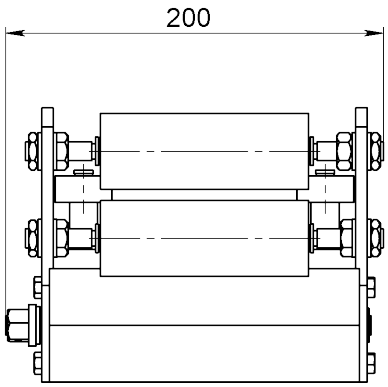

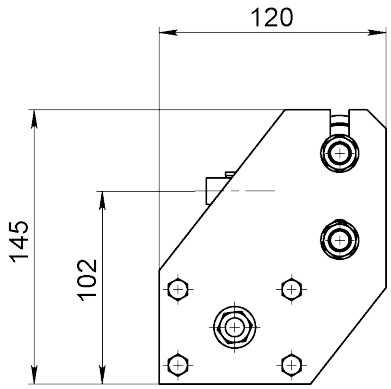

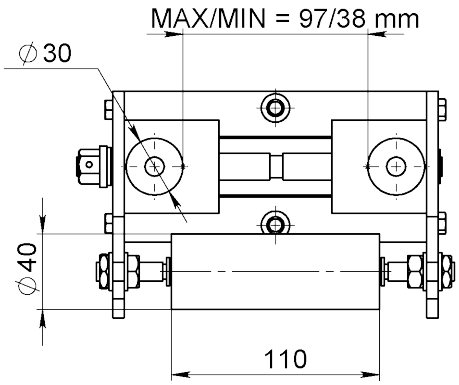

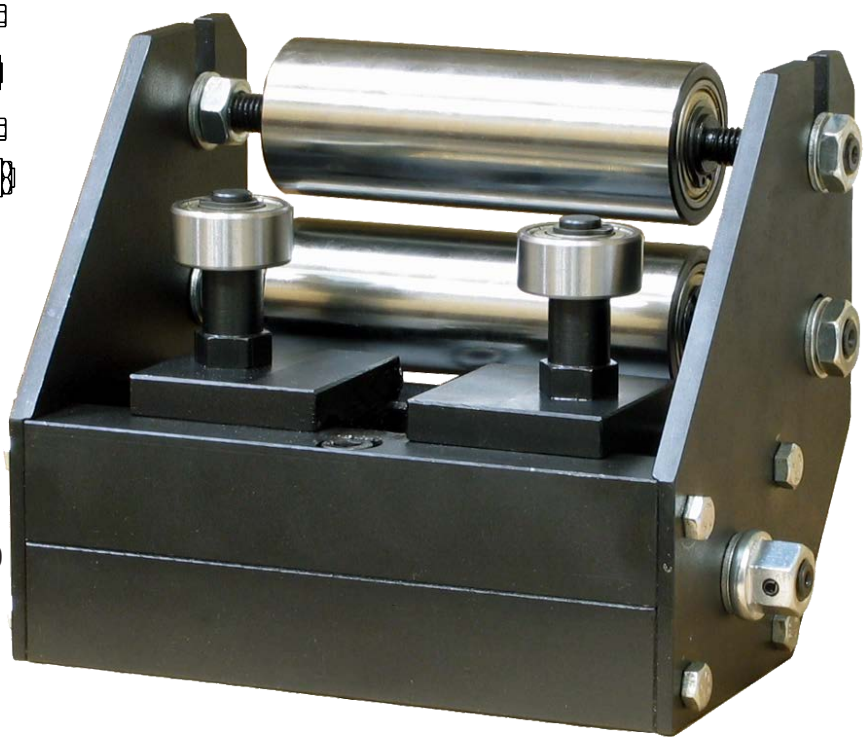

Article: 05020

Drawing No. 3-400798-00

Subec AB **Hesselmans Torg 5** **SE- 131 54 Nacka** **Sweden** **Phone: +46-8-88 46 33** **Email: info@subec.se** **Web: www.subec.se**

Copyright © 2026 Subec

TAPE GUIDE

Max Product width: 130-170mm

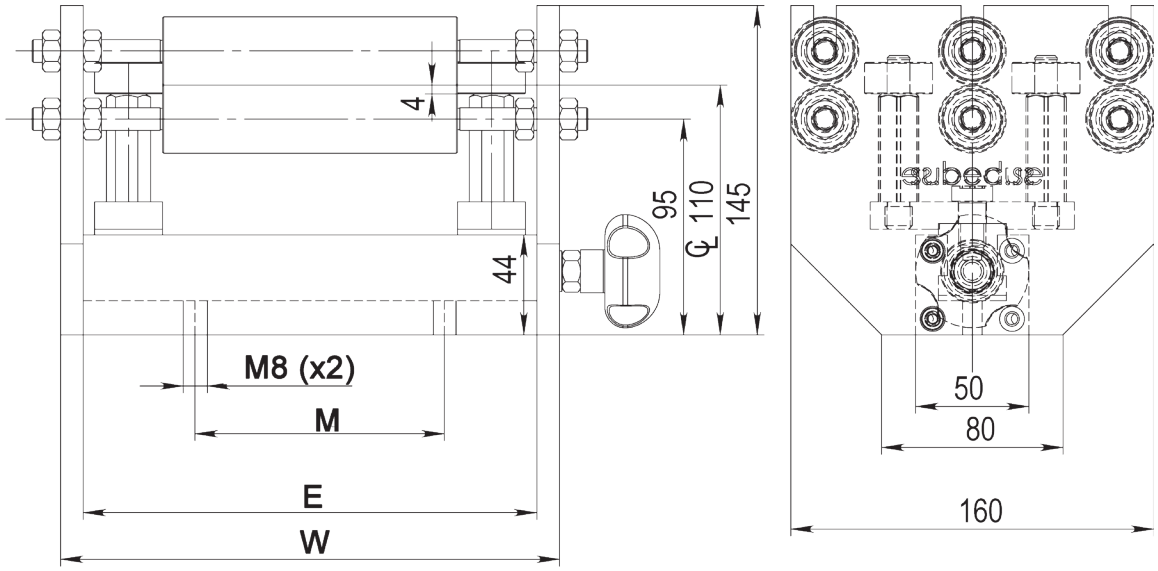

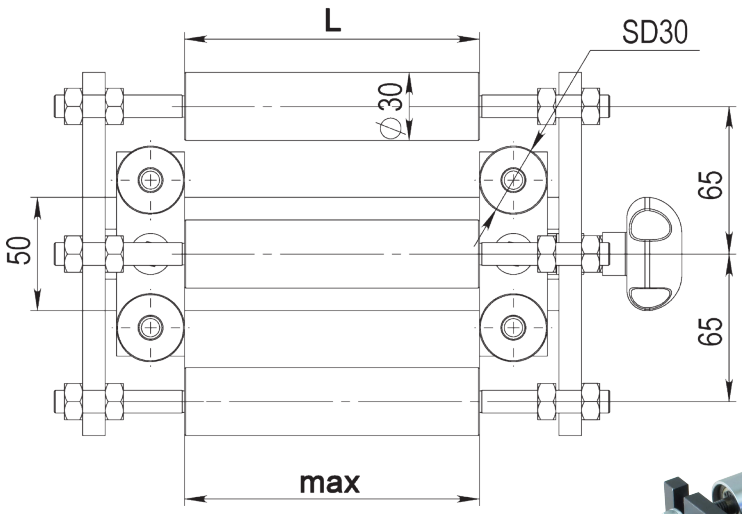



Article	L	M	E	W	max	Weight
00138	130	110	200	220	130	14kg
07088	180	110	240	260	170	

Drawing No. 3-400908-00

Subec AB **Hesselmans Torg 5** **SE- 131 54 Nacka** **Sweden** **Phone: +46-8-88 46 33** **Email: info@subec.se** **Web: www.subec.se**

Copyright © 2026 Subec

TAPE GUIDE

Max Product width: 150mm

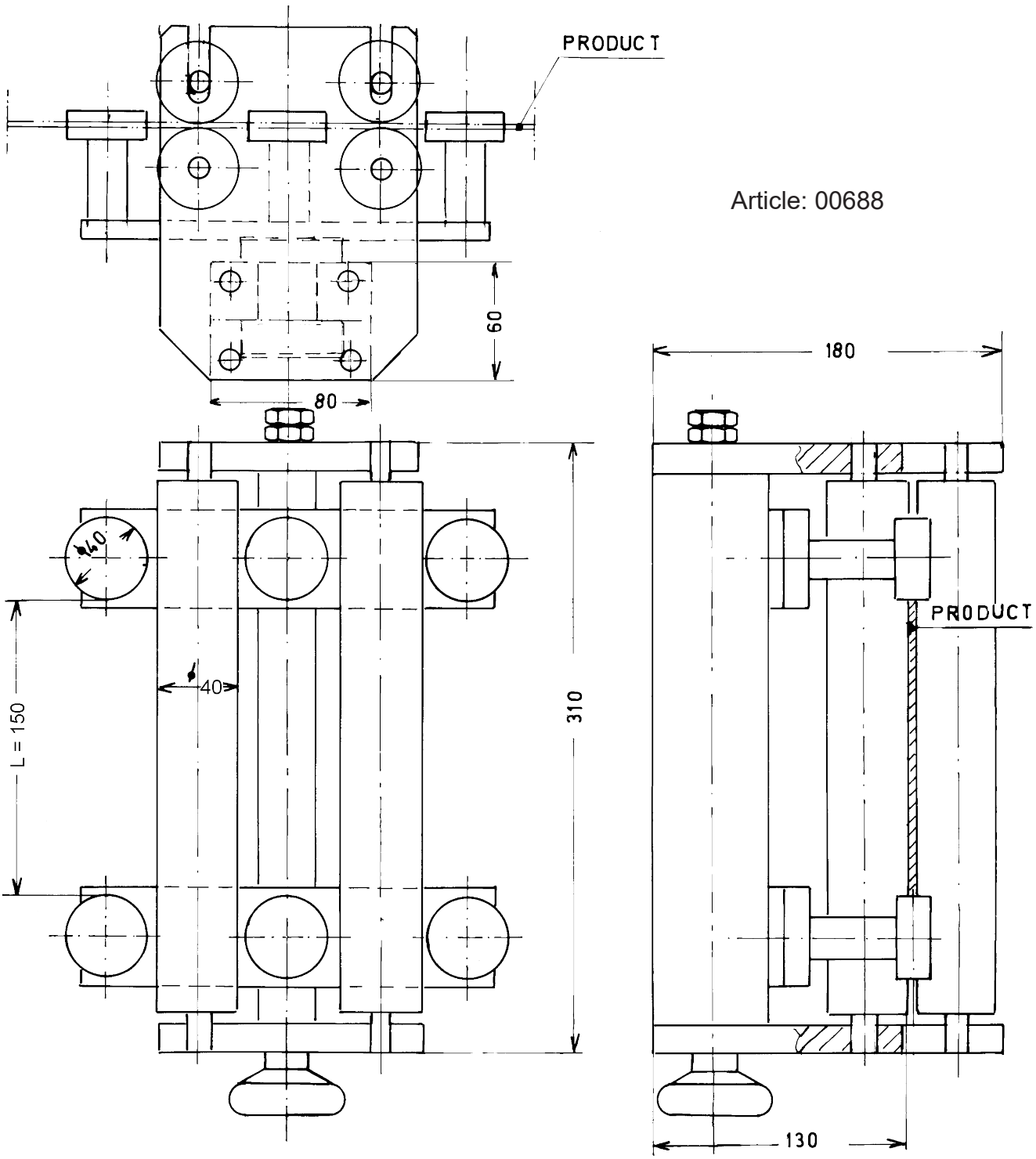

Article: 00688

Drawing No. 3-300112-00

Subec AB **Hesselmans Torg 5** **SE- 131 54 Nacka** **Sweden** **Phone: +46-8-88 46 33** **Email: info@subec.se** **Web: www.subec.se**

Copyright © 2026 Subec

TAPE GUIDE

Max Product width: 170mm

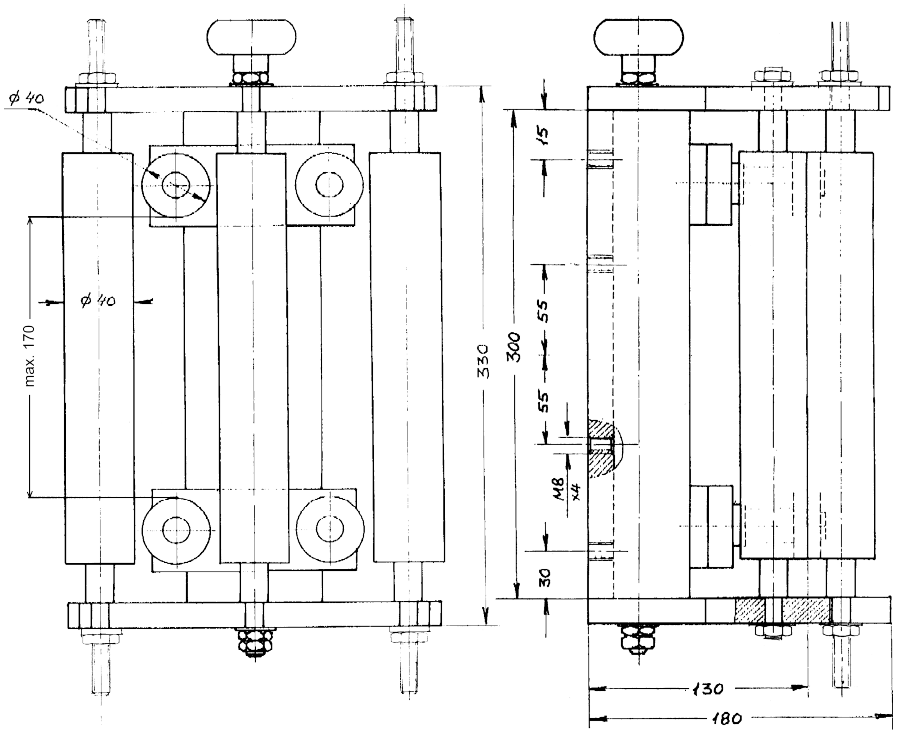

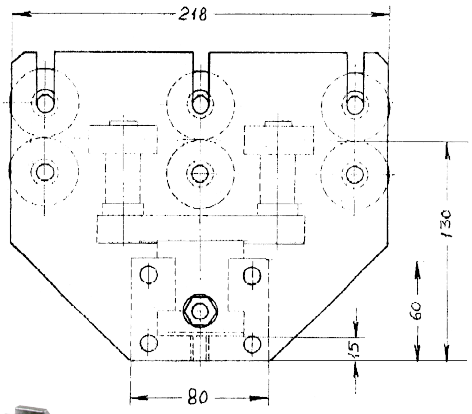

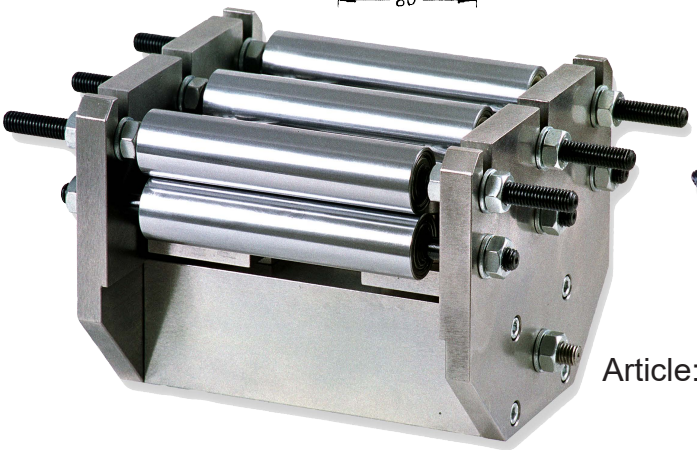

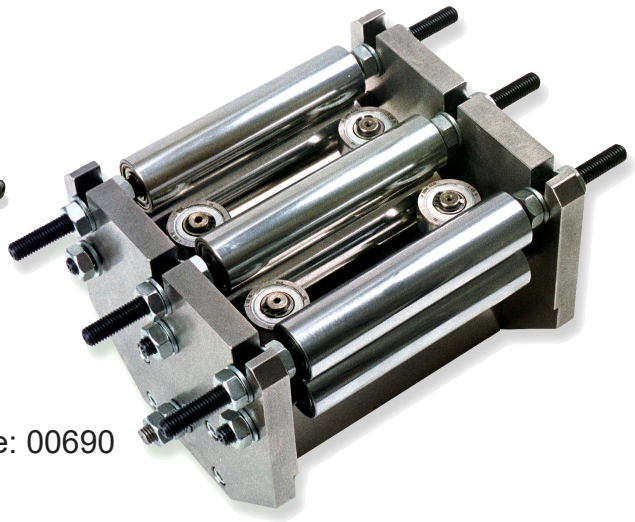

Article: 00690

Drawing No. 3-400379-00

Subec AB **Hesselmans Torg 5** **SE- 131 54 Nacka** **Sweden** **Phone: +46-8-88 46 33** **Email: info@subec.se** **Web: www.subec.se**

Copyright © 2026 Subec

TAPE GUIDE

Max Product width: 260mm

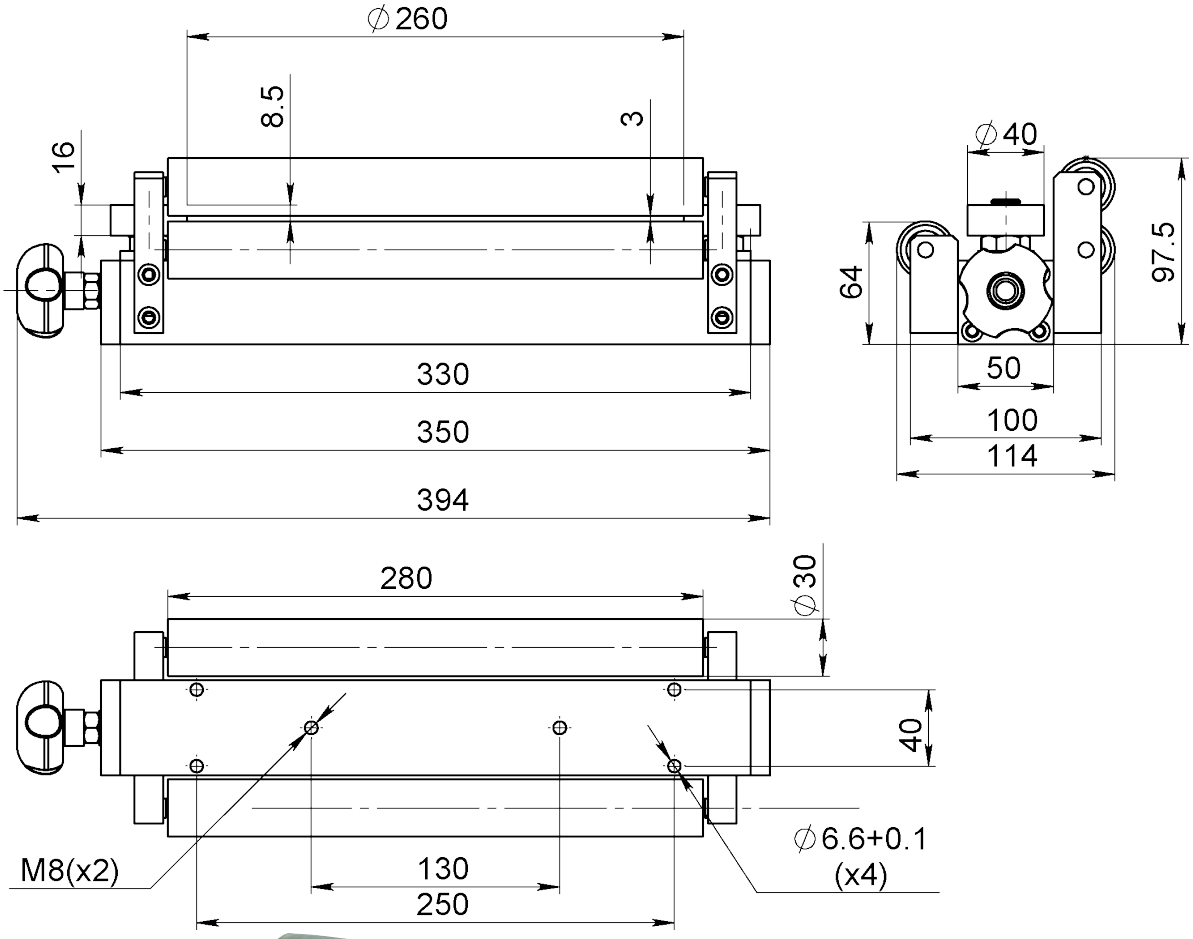

Article: 05518

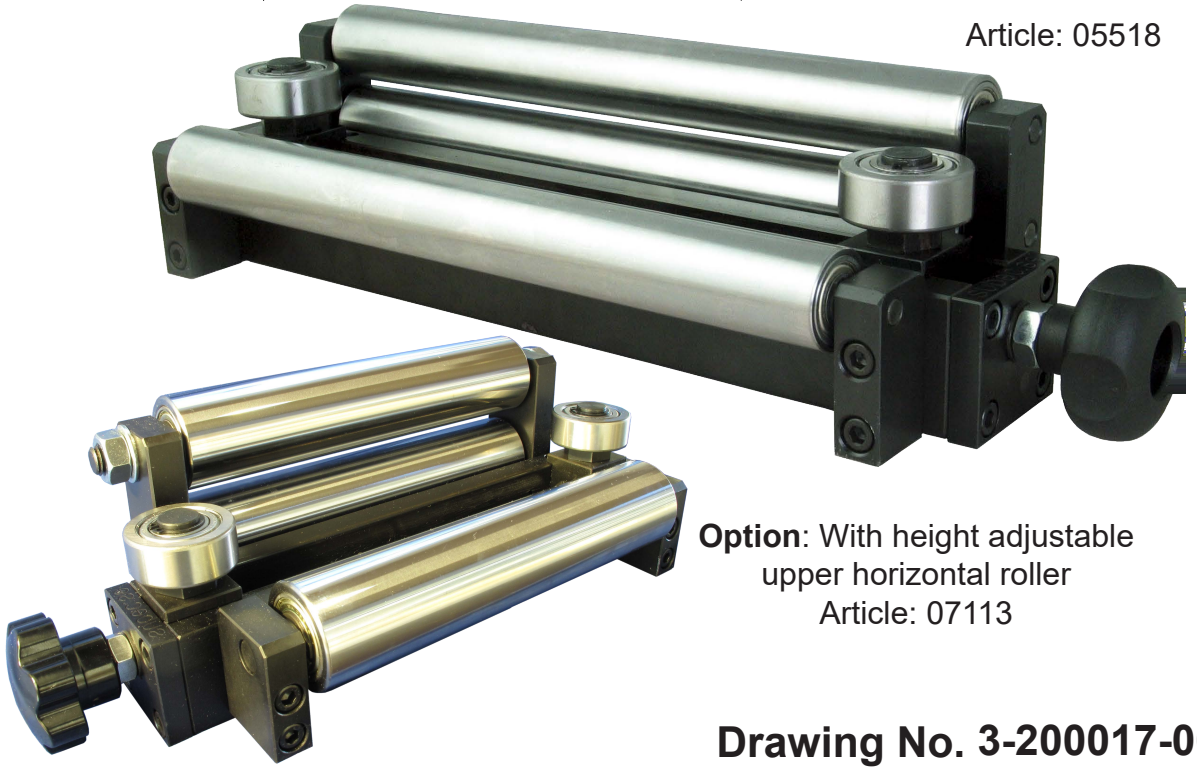

Option: With height adjustable upper horizontal roller
Article: 07113

Drawing No. 3-200017-00

Subec AB **Hesselmans Torg 5** **SE- 131 54 Nacka** **Sweden** **Phone: +46-8-88 46 33** **Email: info@subec.se** **Web: www.subec.se**

Copyright © 2026 Subec

TAPE GUIDE

Max Product width: 350mm

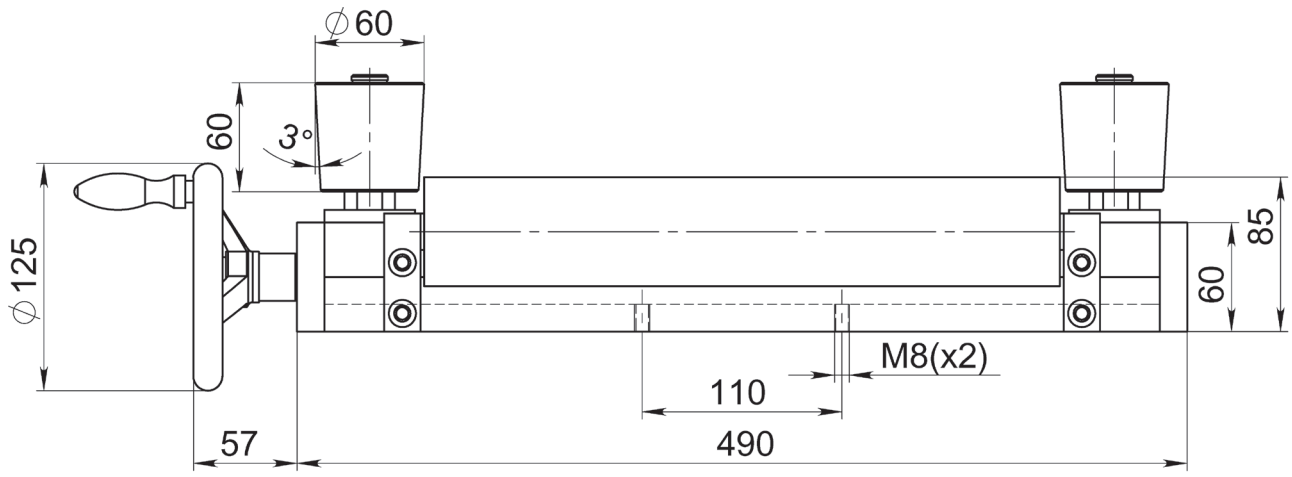

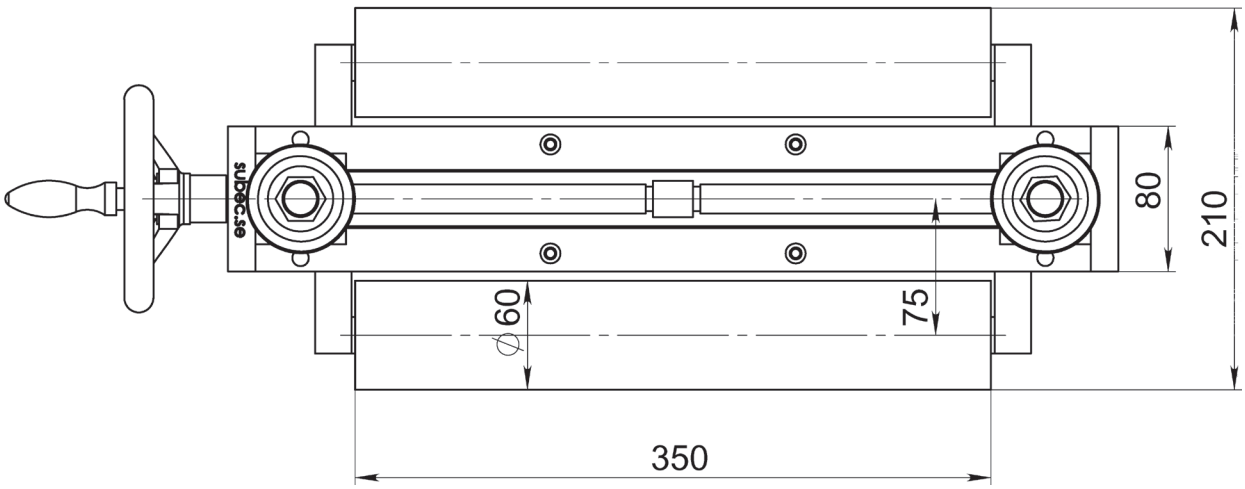

Heavy duty system with conical vertical rollers
Article: 06677

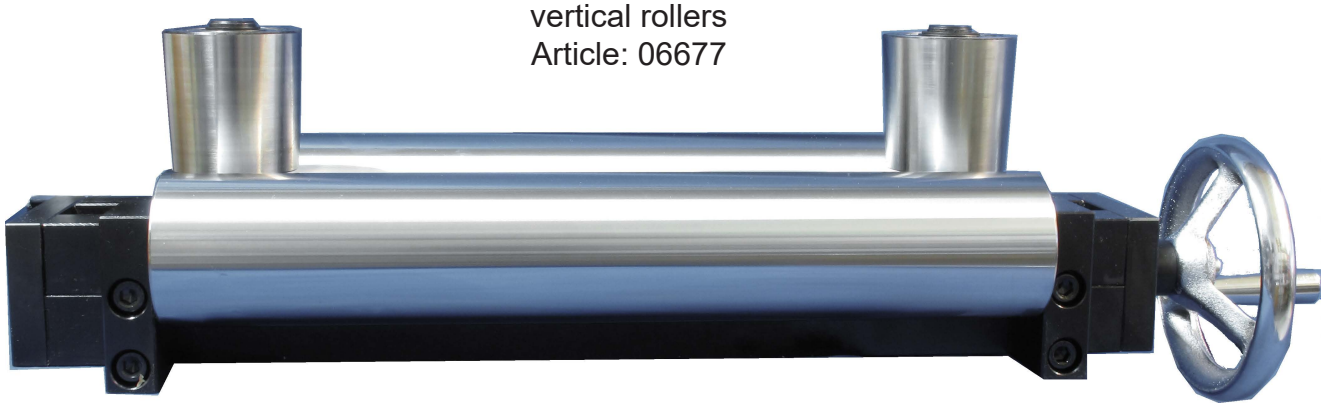

Drawing No. 3-300438-00

Subec AB **Hesselmans Torg 5** **SE- 131 54 Nacka** **Sweden** **Phone: +46-8-88 46 33** **Email: info@subec.se** **Web: www.subec.se**

Copyright © 2026 Subec

TAPE STRAIGHTENER S35-Q-7

Q = Quick closing by excenter

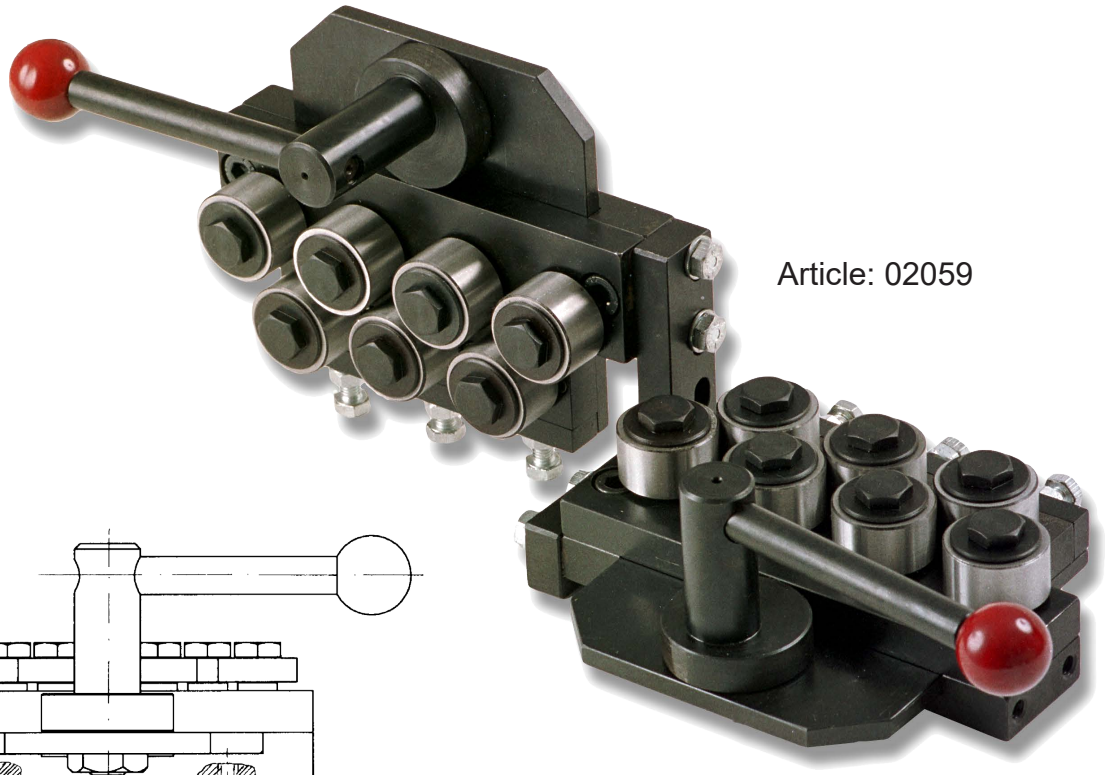

Article: 02059

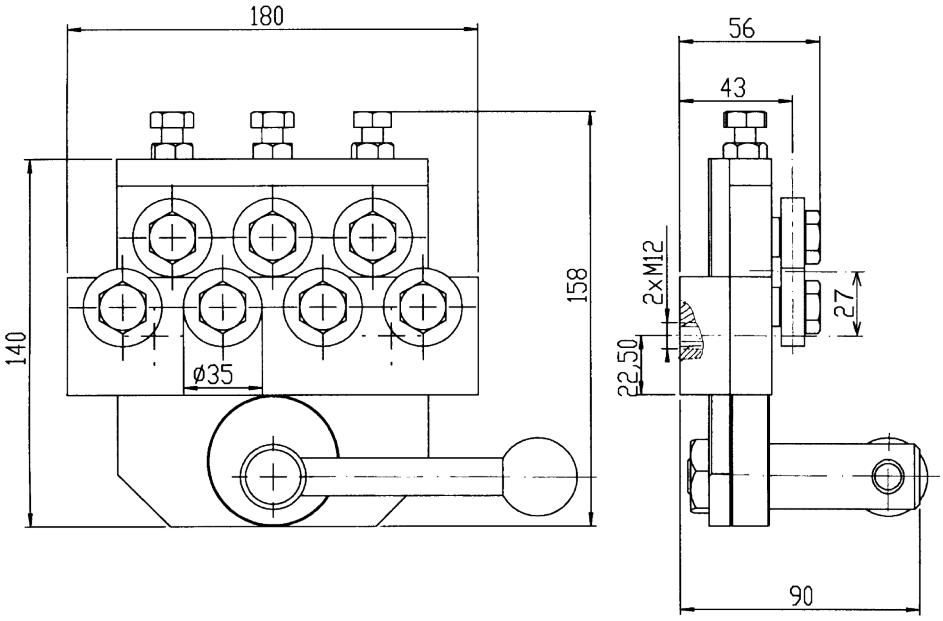

Drawing No. 3-400519-00

Subec AB **Hesselmans Torg 5** **SE- 131 54 Nacka** **Sweden** **Phone: +46-8-88 46 33** **Email: info@subec.se** **Web: www.subec.se**

Copyright © 2026 Subec

TAPE STRAIGHTENER S40-TA-5

Max Product width: 250mm

TA = Top row rollers adjustable

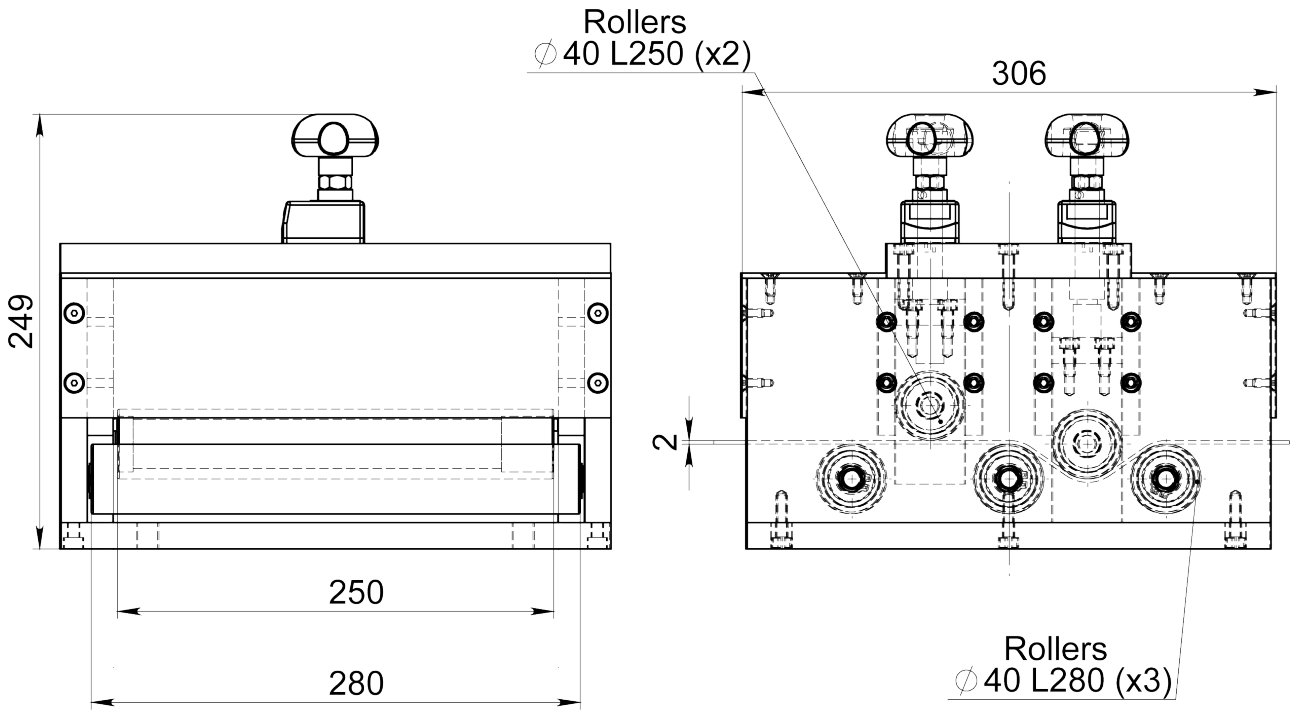

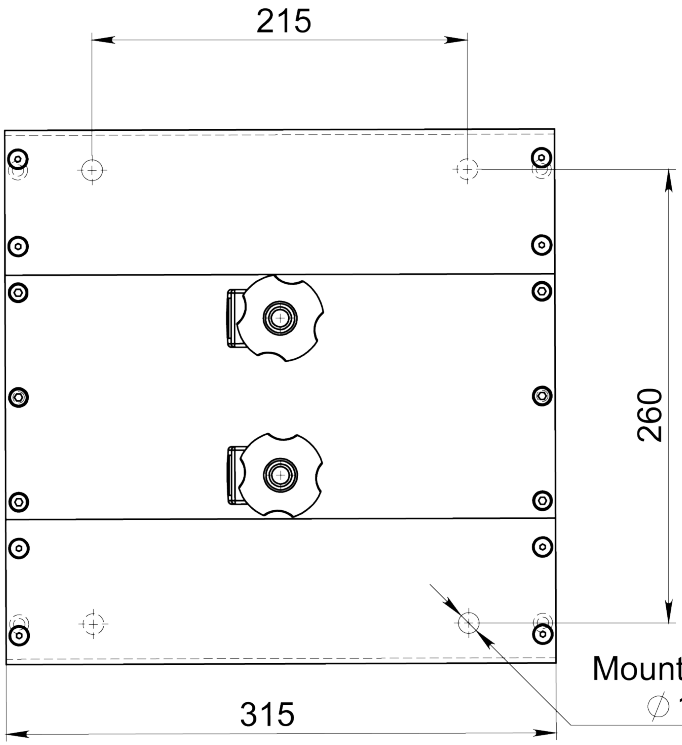



Article: 08238

Drawing No. 3-400496-00

Subec AB **Hesselmans Torg 5** **SE- 131 54 Nacka** **Sweden** **Phone: +46-8-88 46 33** **Email: info@subec.se** **Web: www.subec.se**

Copyright © 2026 Subec

TAPE STRAIGHTENER S40-Q-5

Q = Quick closing by excenter

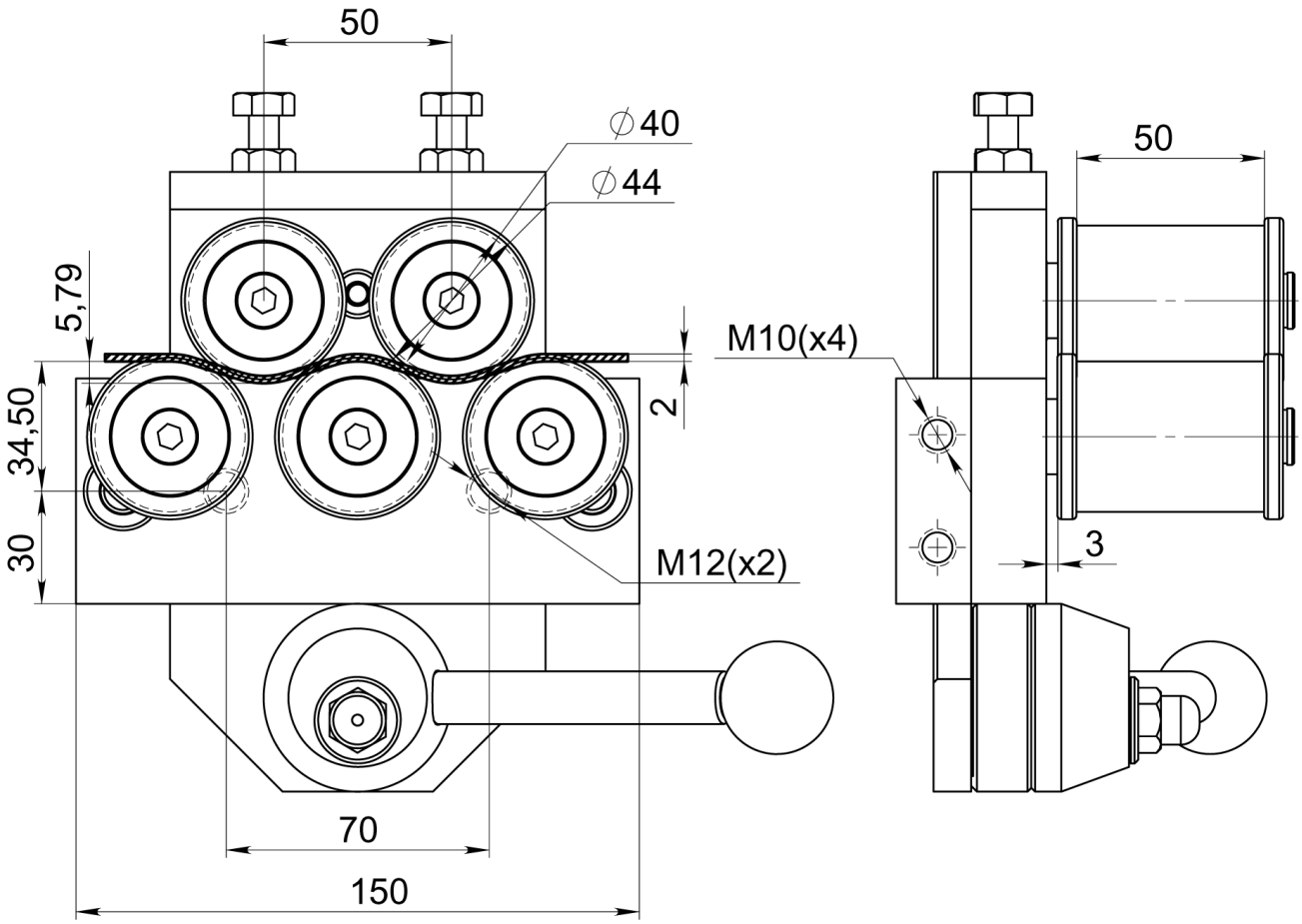



Article: 06781

Equipped with custom made rollers
Article: 06747

Drawing No. 3-400542-00

Subec AB **Hesselmans Torg 5** **SE- 131 54 Nacka** **Sweden** **Phone: +46-8-88 46 33** **Email: info@subec.se** **Web: www.subec.se**

Copyright © 2026 Subec

TAPE STRAIGHTENER S40-Q-7

Q = Quick closing by excenter

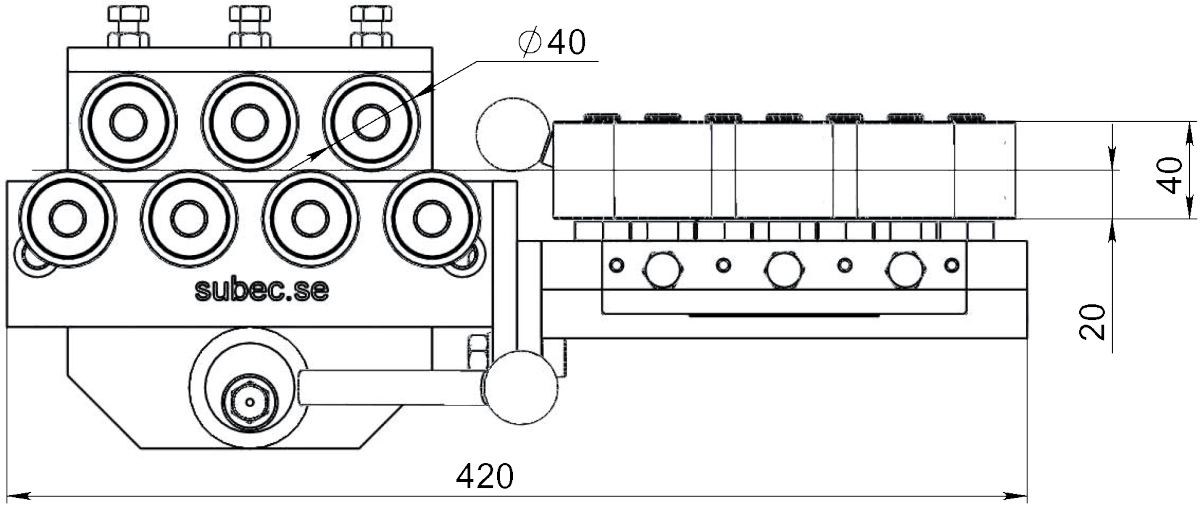

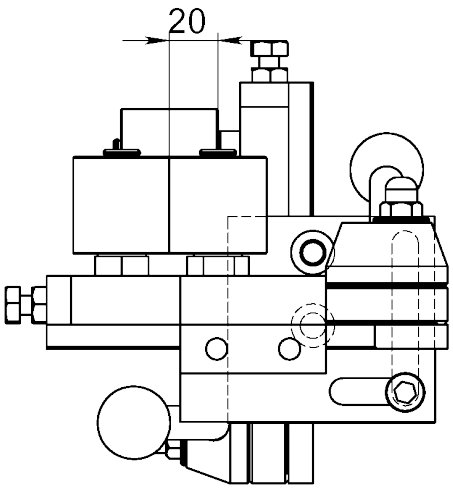

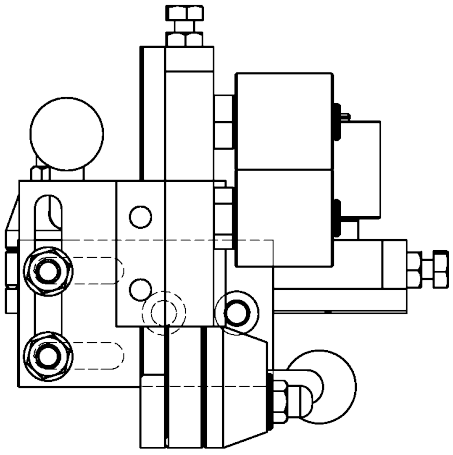

Single Unit

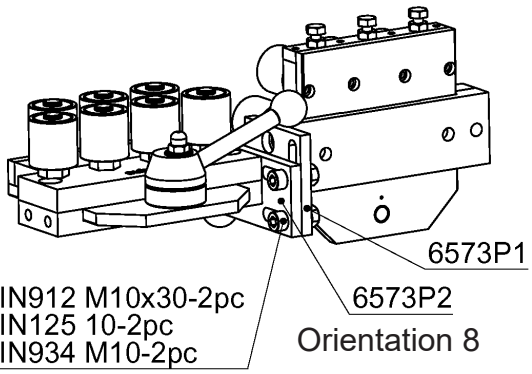



Article: 06575

Drawing No. 3-400542-01

Subec AB **Hesselmans Torg 5** **SE- 131 54 Nacka** **Sweden** **Phone: +46-8-88 46 33** **Email: info@subec.se** **Web: www.subec.se**

Copyright © 2026 Subec

TAPE STRAIGHTENER S40-Q-7

Q = Quick closing by excenter

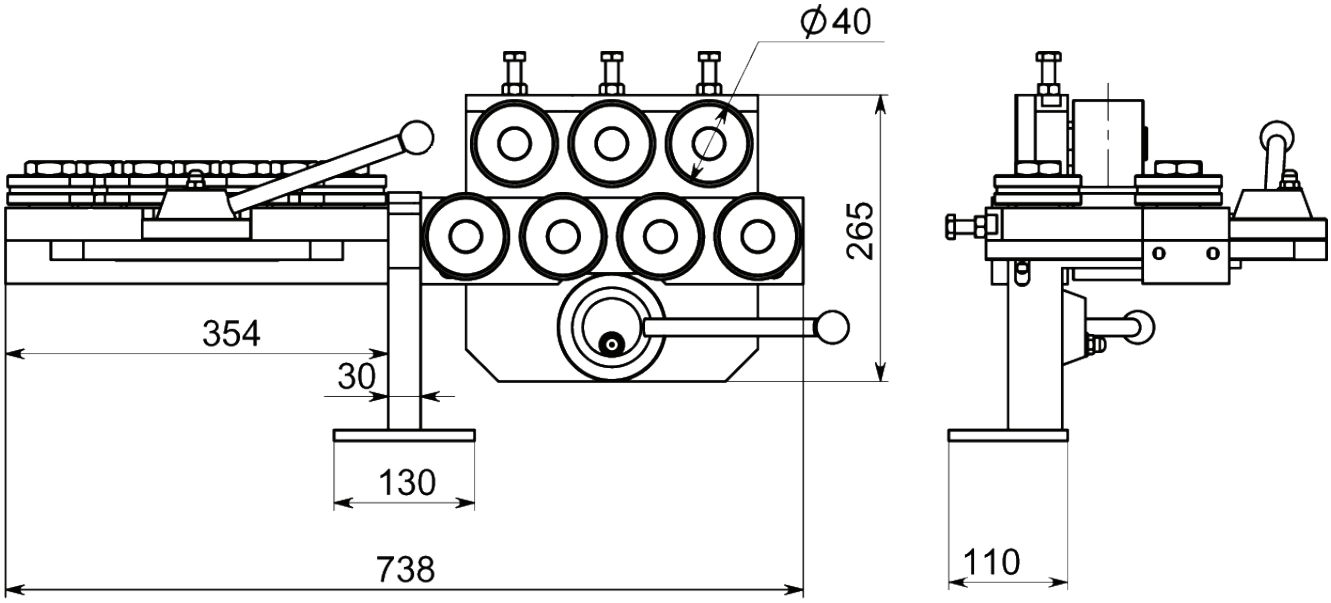

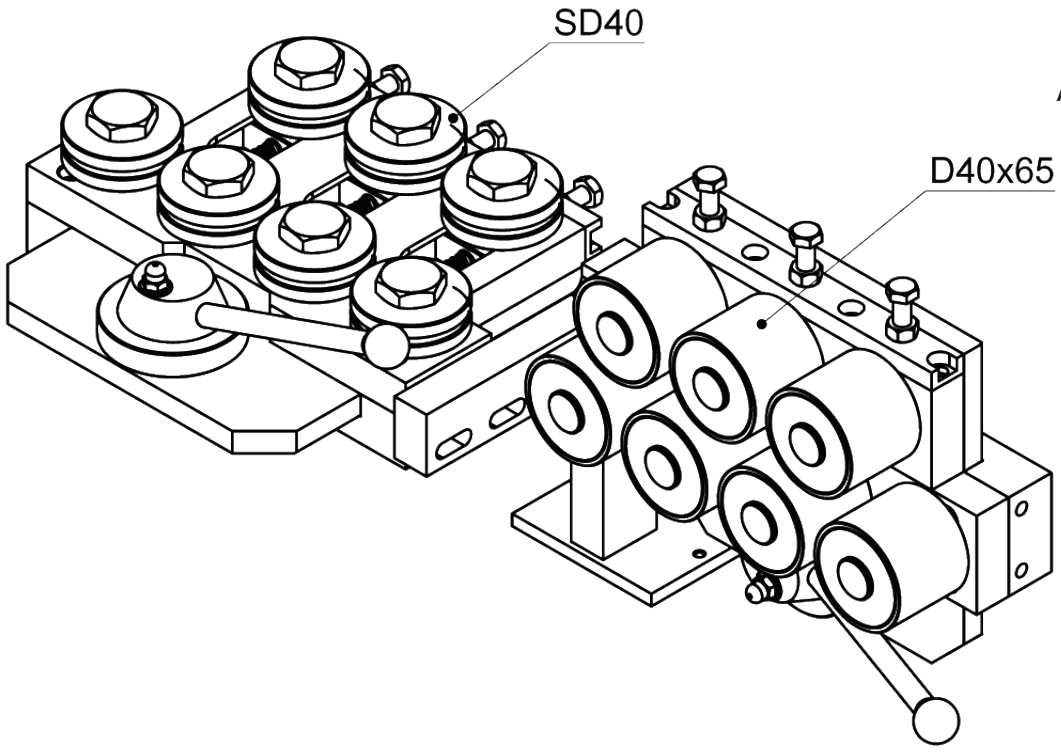

Article: 06575

Drawing No. 3-400542-01

Subec AB **Hesselmans Torg 5** **SE- 131 54 Nacka** **Sweden** **Phone: +46-8-88 46 33** **Email: info@subec.se** **Web: www.subec.se**

Copyright © 2026 Subec

TAPE STRAIGHTENER S40-Q-7

Max Product Ø: 30mm

High Edge

Q = Quick closing by excenter

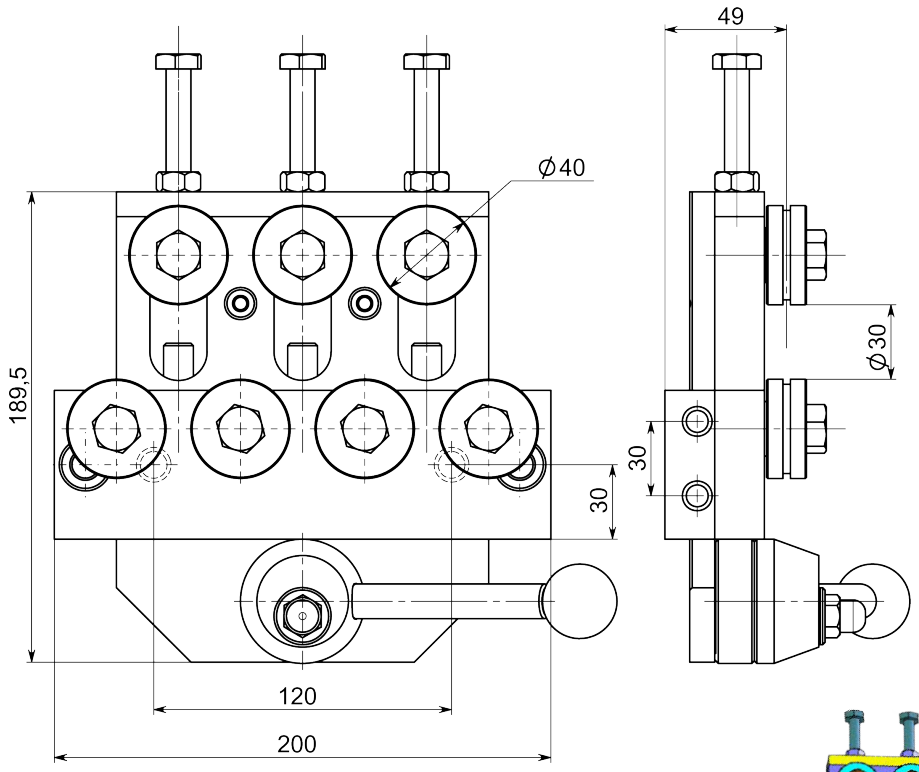

Article: 04424*
Weight: 8,8kg

Option: With Stand and tape straightener

Article: 04424

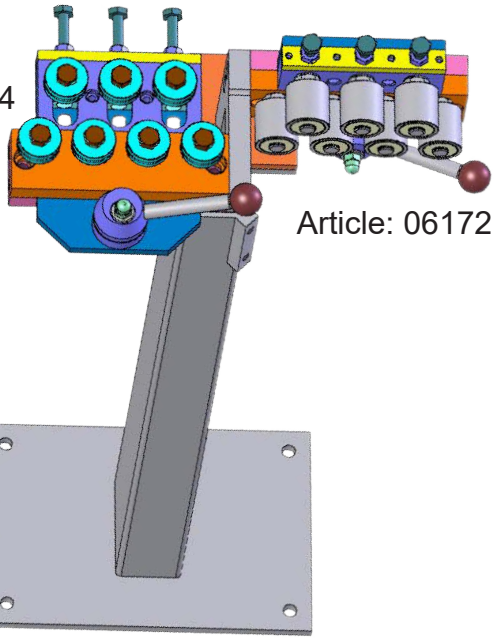

Article: 06172

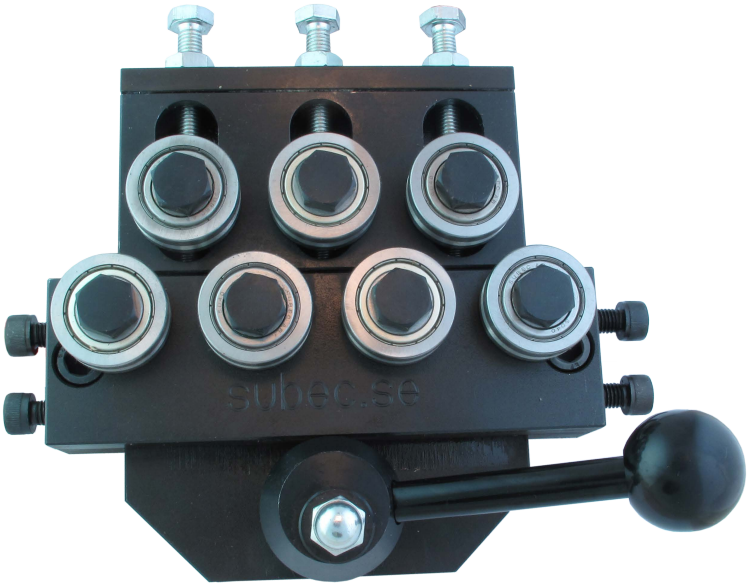

With SD Straightening rollers

Drawing No. 3-400736-00

* Stock item

Subec AB **Hesselmans Torg 5** **SE- 131 54 Nacka** **Sweden** **Phone: +46-8-88 46 33** **Email: info@subec.se** **Web: www.subec.se**

Copyright © 2026 Subec

TAPE STRAIGHTENER S50-Q-7 + S80-AA-7

Q = Quick closing by excenter
AA = All rollers individually adjustable

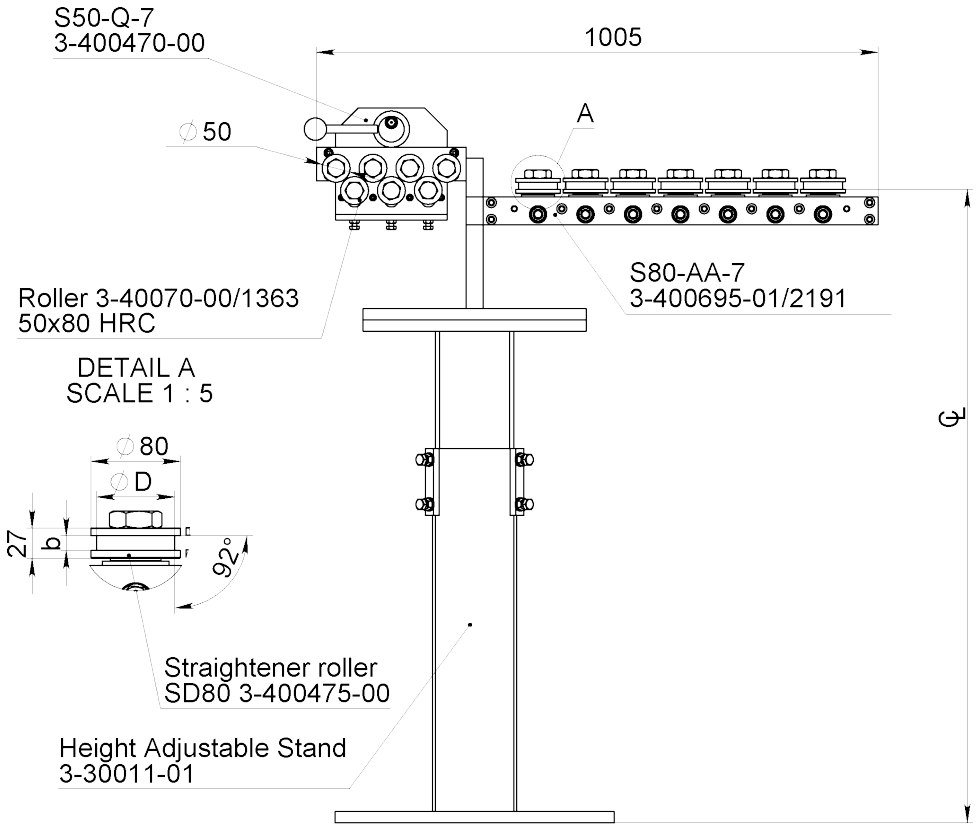

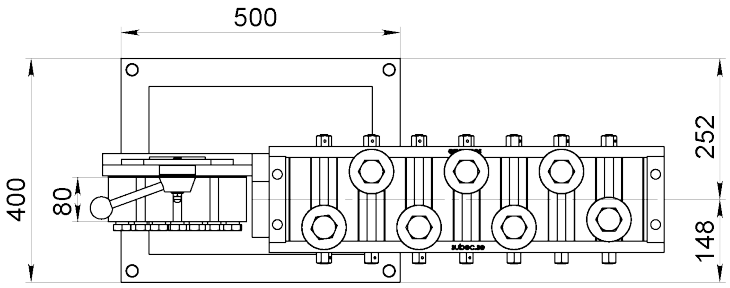

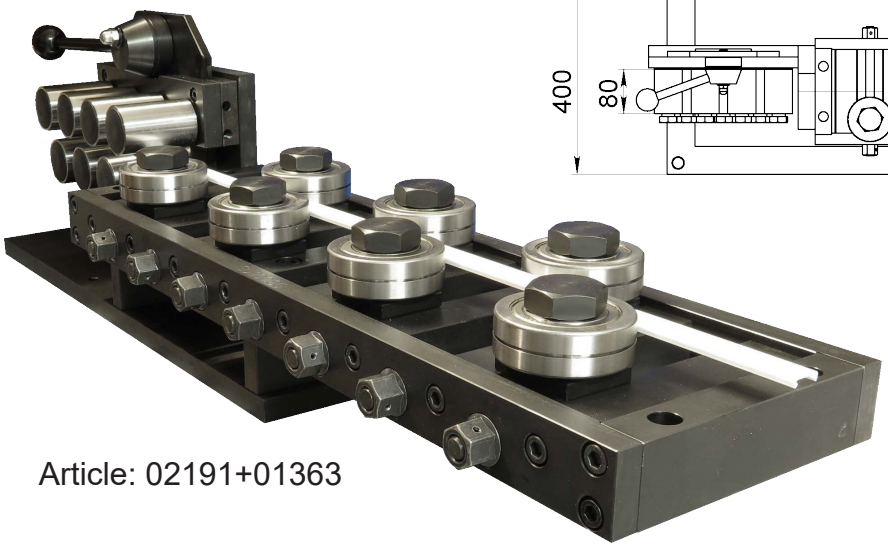

Article: 02191+01363

Subec AB **Hesselmans Torg 5** **SE- 131 54 Nacka** **Sweden** **Phone: +46-8-88 46 33** **Email: info@subec.se** **Web: www.subec.se**

Copyright © 2026 Subec

TAPE STRAIGHTENER, TS 50X110/200-7

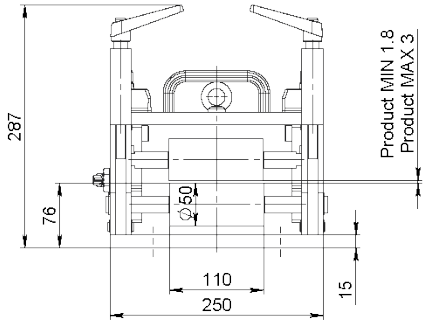

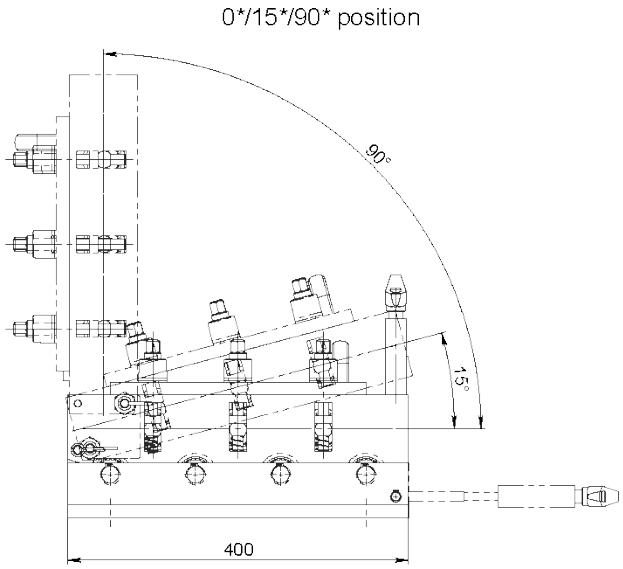

Info:
With Position Indicator

Typically for tape thickness 1.8 to 3.0mm

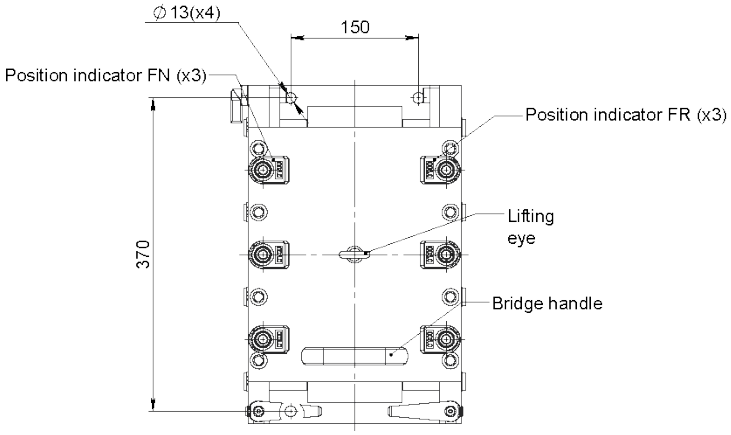

Article: 14068
Max Product width: 110mm







Article: 14067
Max Product width: 200mm

Drawing No. 3-401394-00

Subec AB **Hesselmans Torg 5** **SE- 131 54 Nacka** **Sweden** **Phone: +46-8-88 46 33** **Email: info@subec.se** **Web: www.subec.se**

Copyright © 2026 Subec

TAPE STRAIGHTENER S52-HW-7

HW = Open/close by handwheel

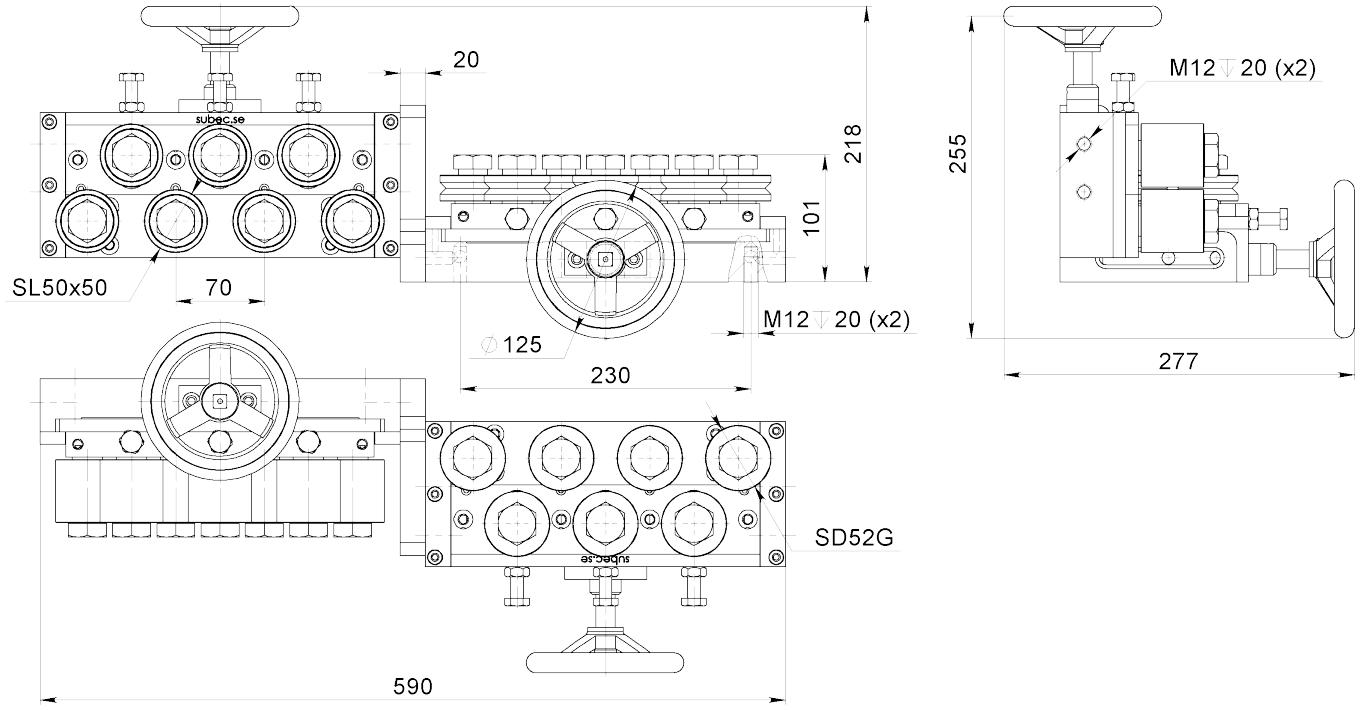

Article: 08370

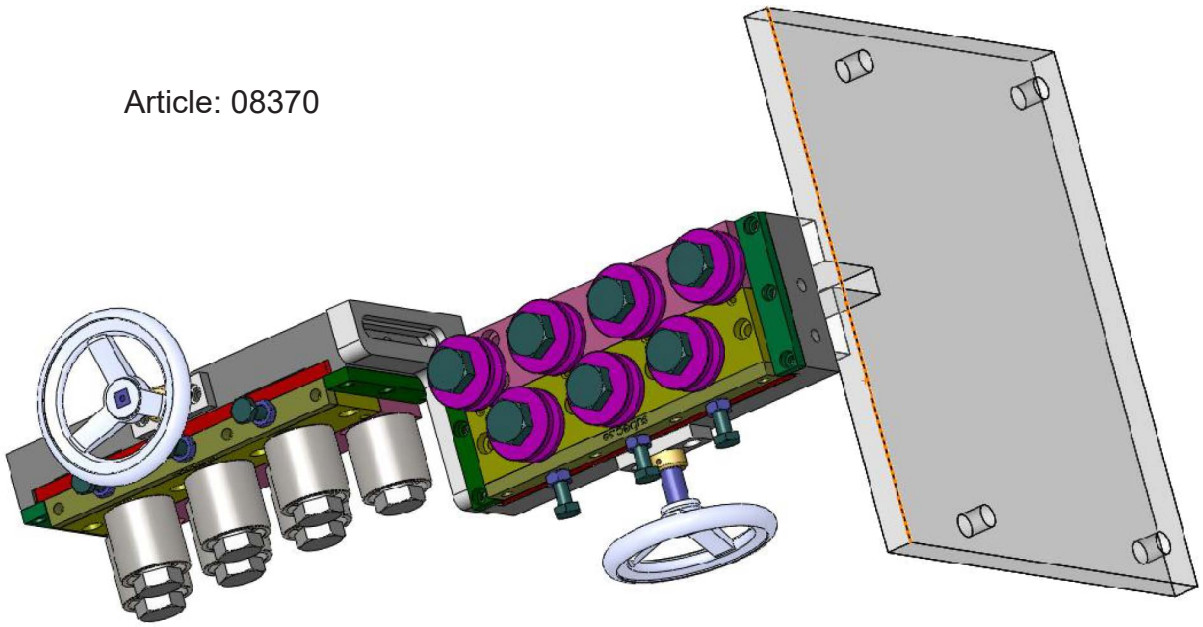

Drawing No. 3-400994-00

Subec AB **Hesselmans Torg 5** **SE- 131 54 Nacka** **Sweden** **Phone: +46-8-88 46 33** **Email: info@subec.se** **Web: www.subec.se**

Copyright © 2026 Subec

TAPE STRAIGHTENER S80-AA-9

AA = All rollers individually adjustable

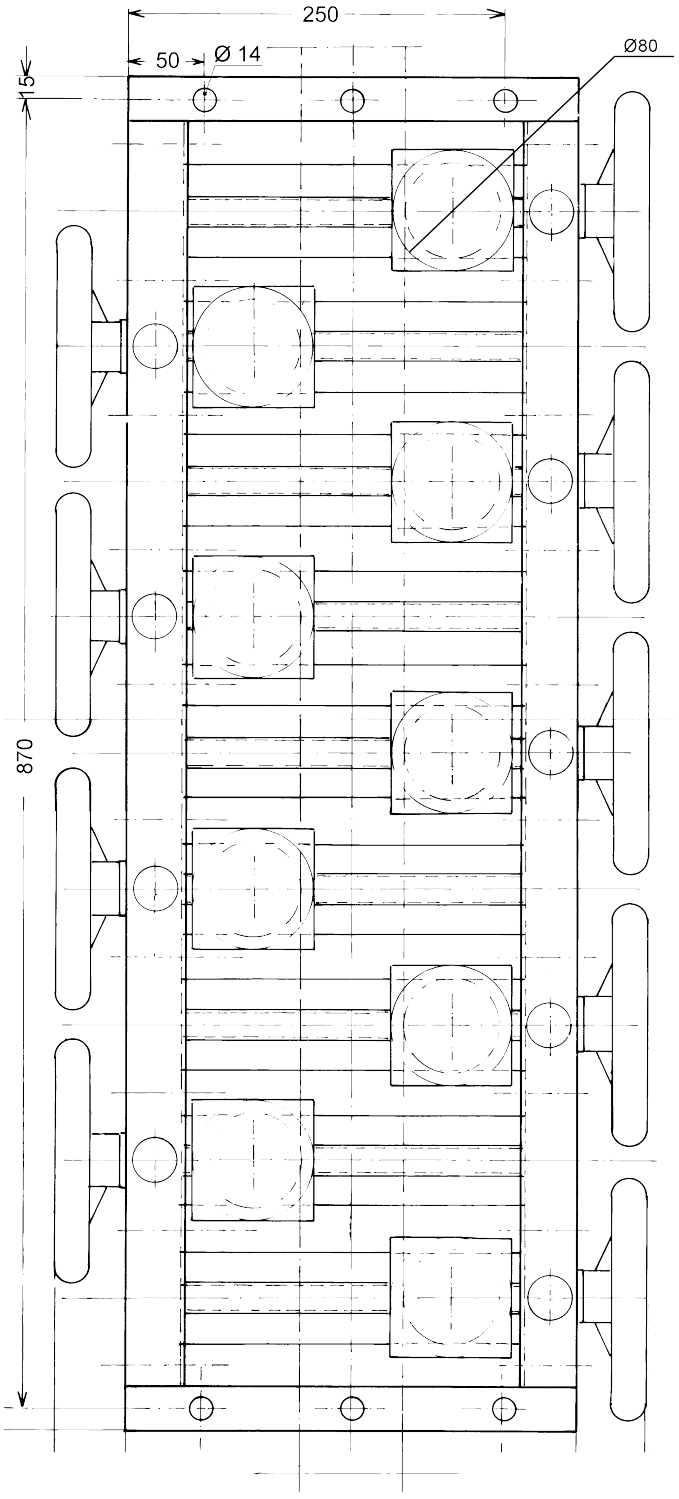

Article: 00095

Drawing No. 3-300115-00

Subec AB **Hesselmans Torg 5** **SE- 131 54 Nacka** **Sweden** **Phone: +46-8-88 46 33** **Email: info@subec.se** **Web: www.subec.se**

Copyright © 2026 Subec

PREFORMER FOR ROUND/FLAT STEEL WIRES



Article: 1149
Weight: 59kg
34 Positions

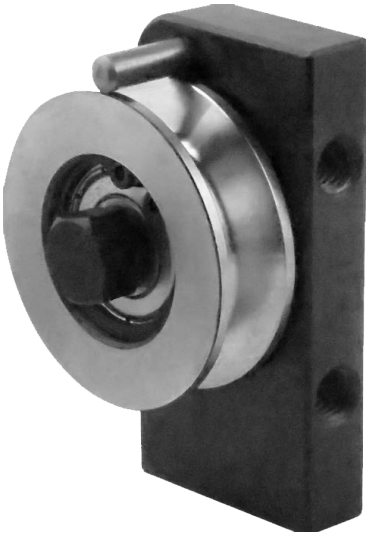

Preformer Accessory



Article: 2791
6 Positions

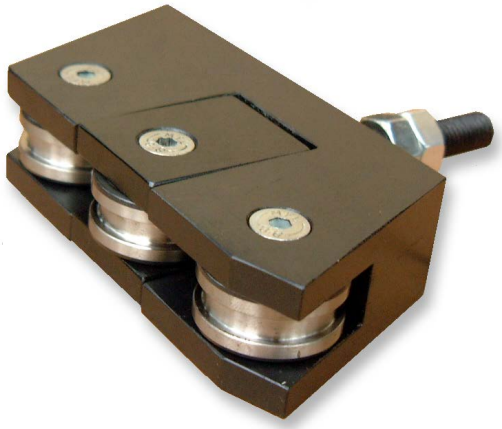



Article: 2790
6 Positions

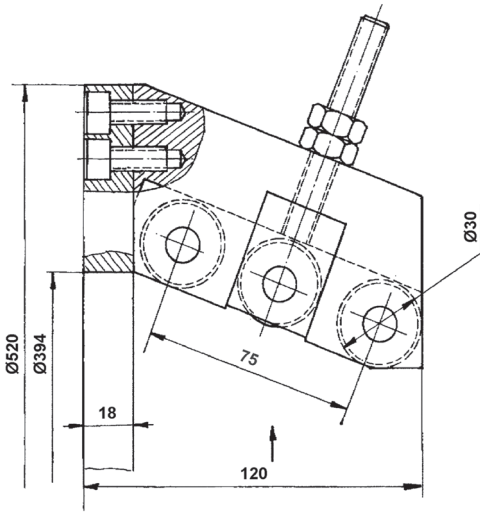

Drawing No. 3-400787-00

Subec AB **Hesselmans Torg 5** **SE- 131 54 Nacka** **Sweden** **Phone: +46-8-88 46 33** **Email: info@subec.se** **Web: www.subec.se**

Copyright © 2026 Subec

PREFORMER - RADIAL DEFORMATION

For stranding machines with 6 positions

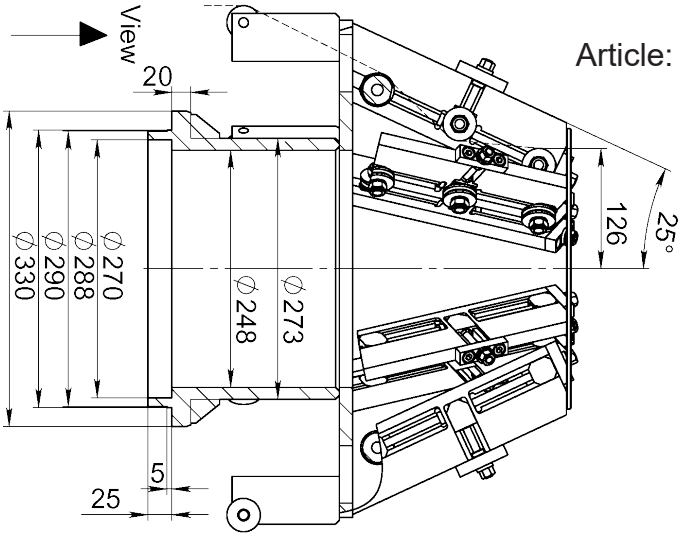

Article: 6448

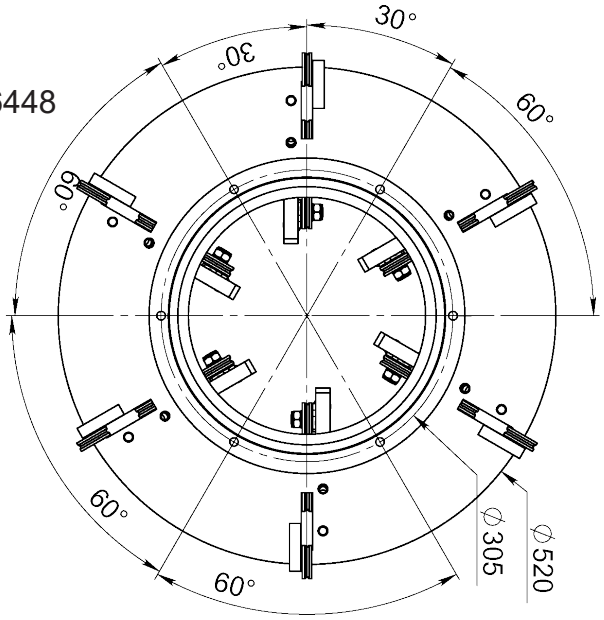

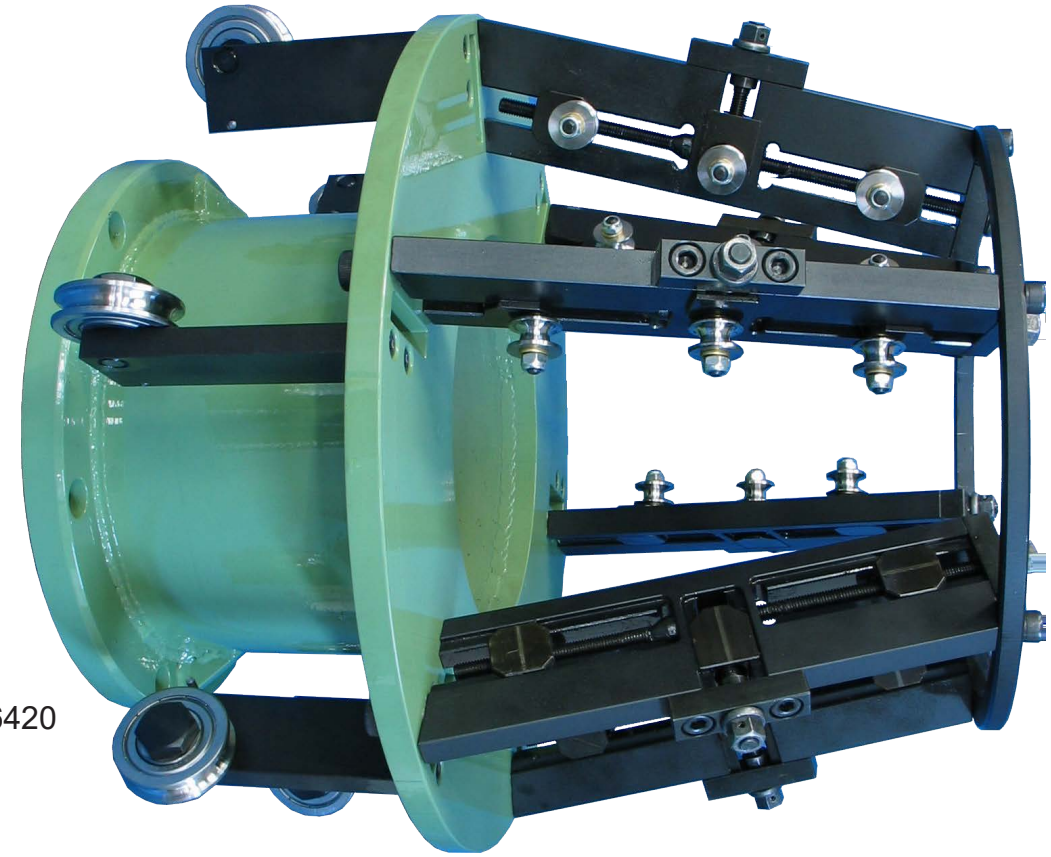

Article: 6420

Drawing No. 3-400513-06

Subec AB | **Hesselmans Torg 5, SE- 131 54 Nacka, Sweden** | **Phone: +46-8-88 46 33** | **Email: info@subec.se, Web: www.subec.se**

Copyright © 2026 Subec

PREFORMER - RADIAL DEFORMATION

For stranding machines with 12, 18 or 24 positions

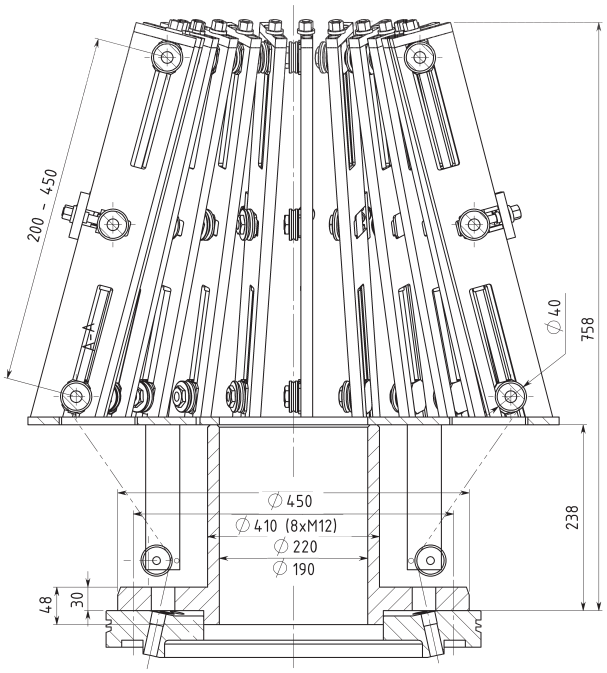



12 Positions

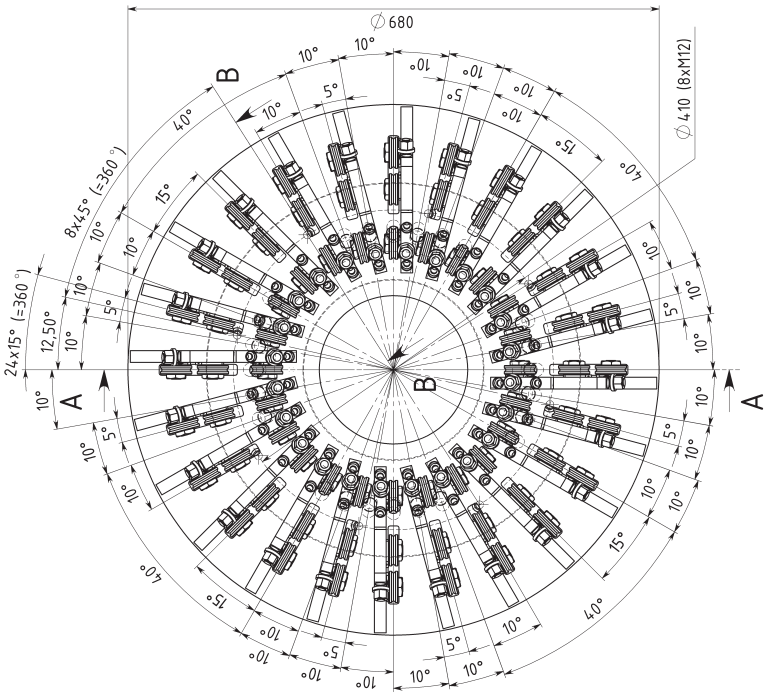

24 Positions

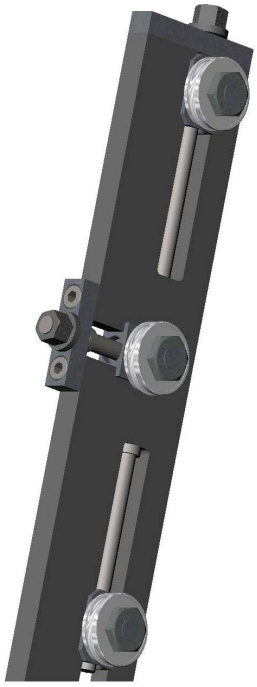

Drawing No. 3-400513-24

Subec AB
Hesselmans Torg 5
SE- 131 54 Nacka
Sweden
Phone: +46-8-88 46 33
Email: info@subec.se
Web: www.subec.se

Copyright © 2026 Subec

PREFORMER - RADIAL DEFORMATION

For stranding machines with 24 positions

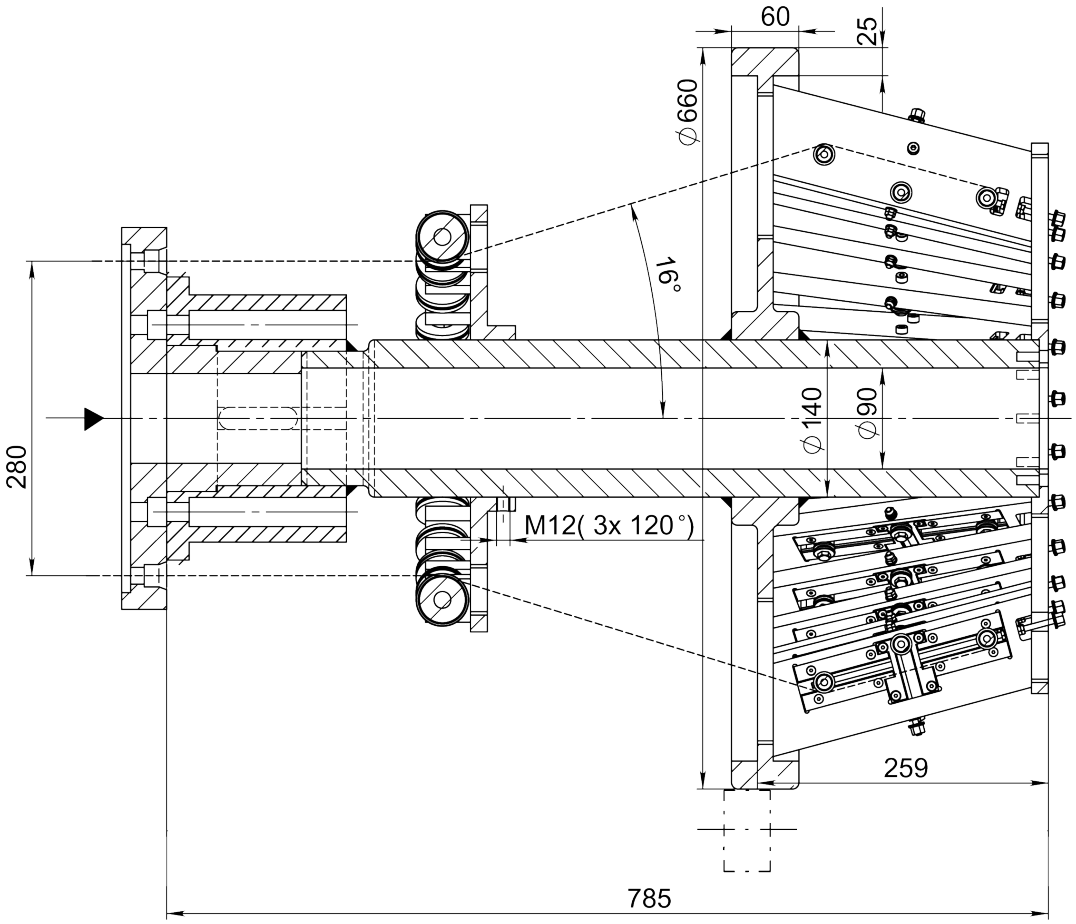

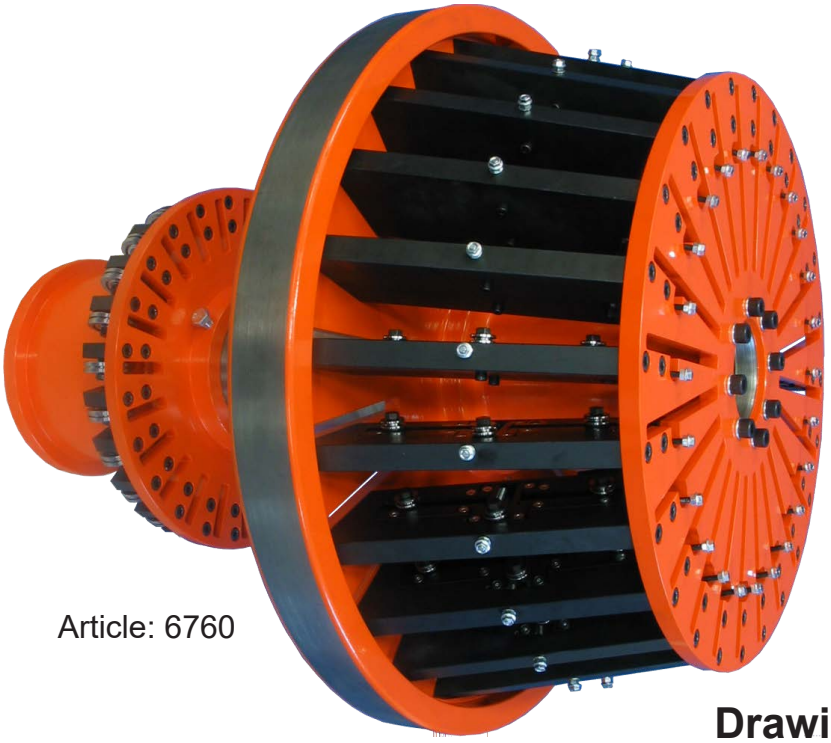

Article: 6760



Drawing No. 3-400513-06

Subec AB **Hesselmans Torg 5** **SE- 131 54 Nacka** **Sweden** **Phone: +46-8-88 46 33** **Email: info@subec.se** **Web: www.subec.se**

Copyright © 2026 Subec

PREFORMER - RADIAL DEFORMATION

For stranding machines with 88 positions

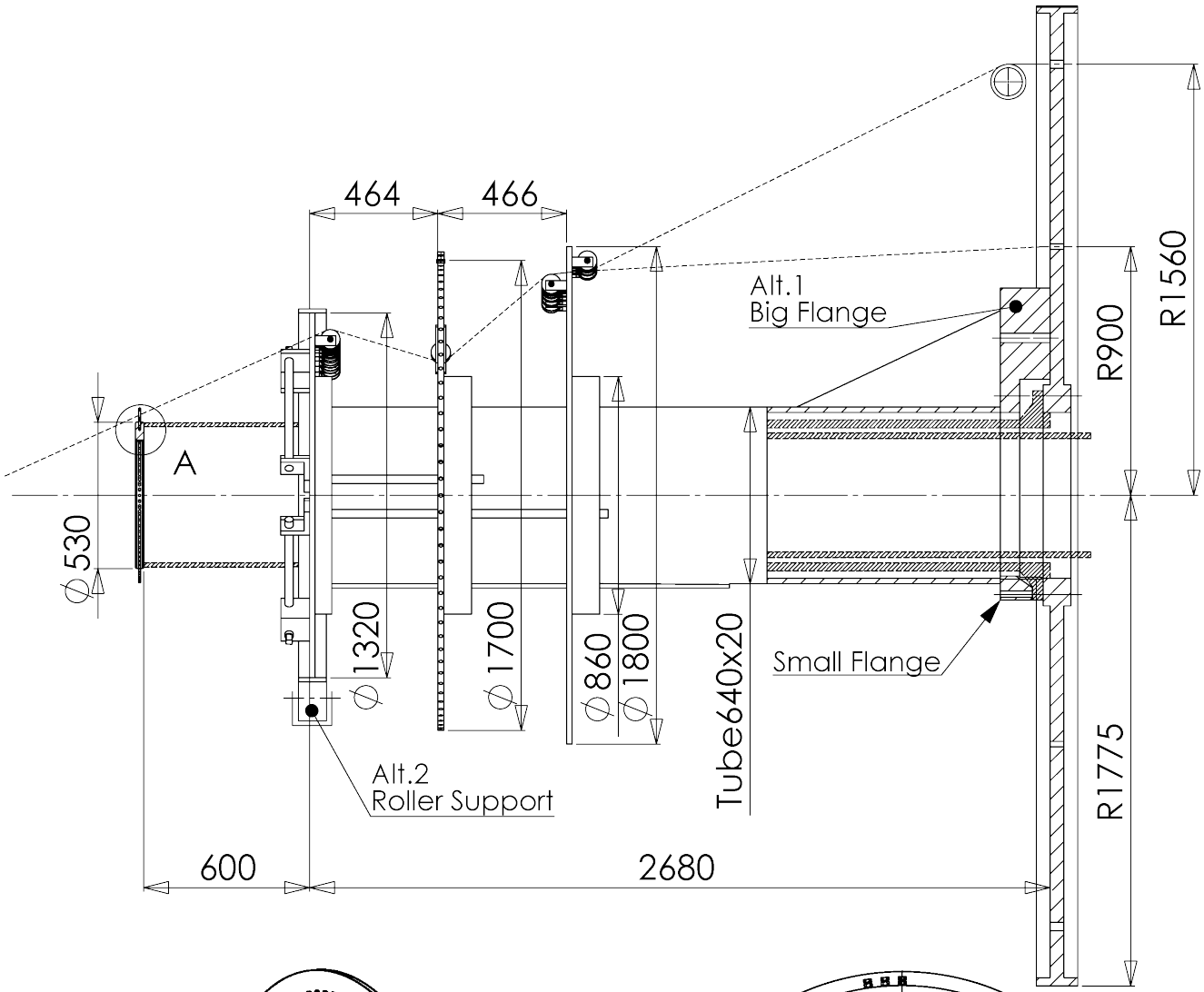

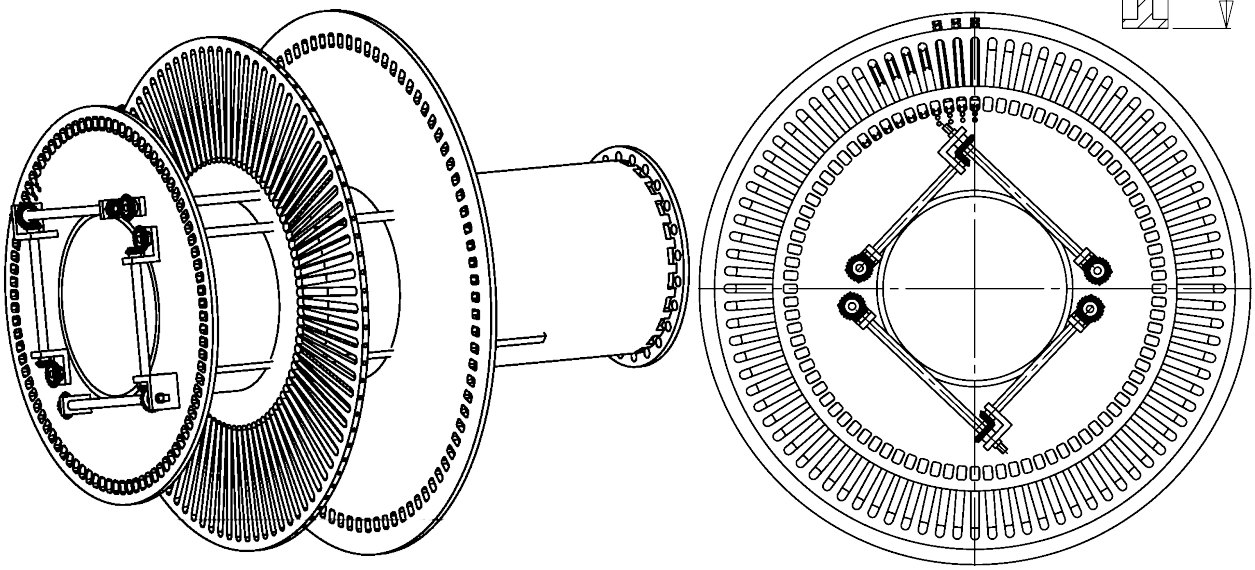

Drawing No. 3-400784-00

Subec AB
Hesselmans Torg 5
SE- 131 54 Nacka
Sweden
Phone: +46-8-88 46 33
Email: info@subec.se
Web: www.subec.se

Copyright © 2026 Subec

PREFORMER - TANGENTIAL DEFORMATION

For stranding machines with 6 positions

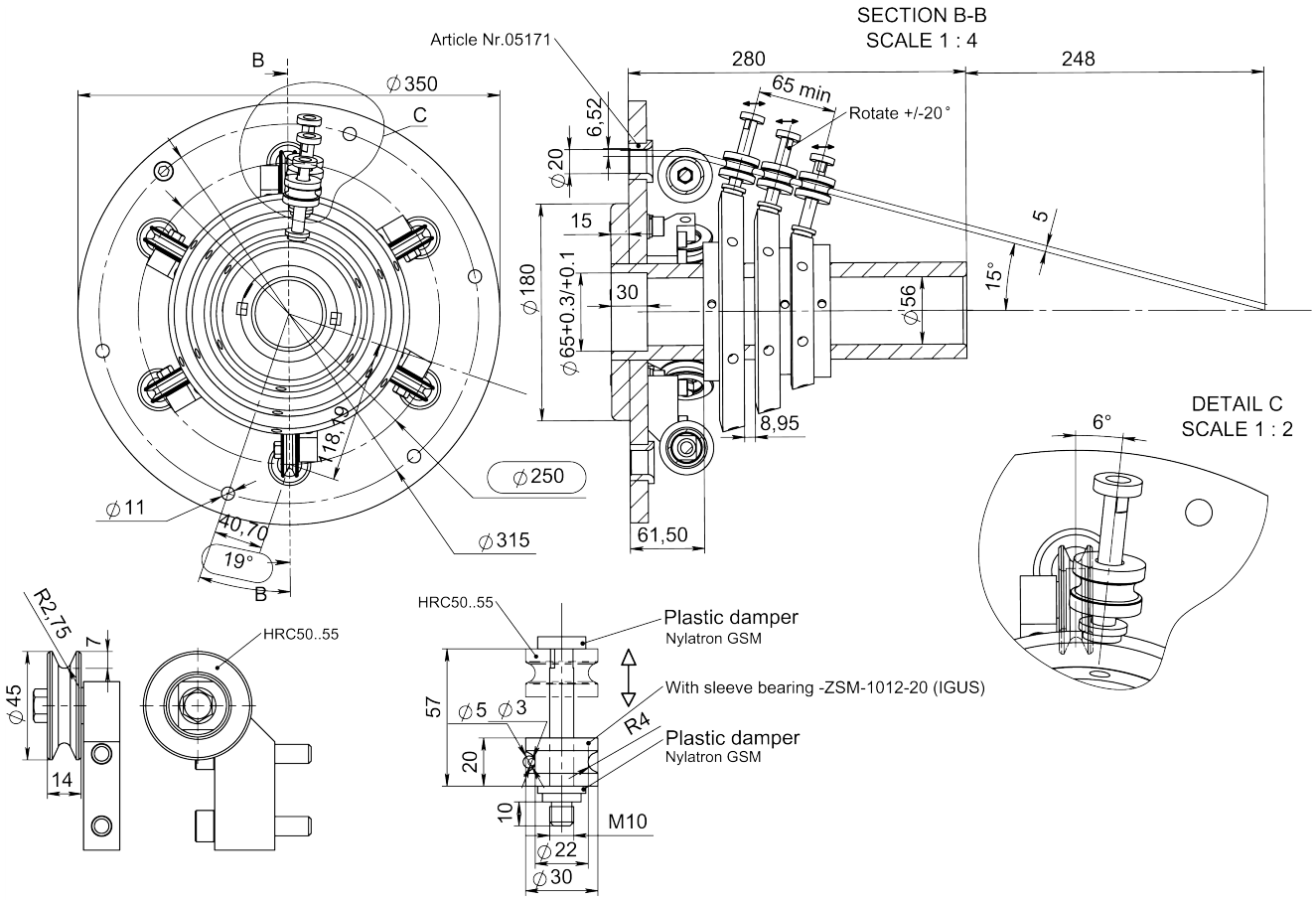

Article: 11443



Drawing No. 3-401291-00

Subec AB **Hesselmans Torg 5** **SE- 131 54 Nacka** **Sweden** **Phone: +46-8-88 46 33** **Email: info@subec.se** **Web: www.subec.se**

Copyright © 2026 Subec

PREFORMER - TANGENTIAL DEFORMATION

For stranding machines with 6, 12 or 30 positions

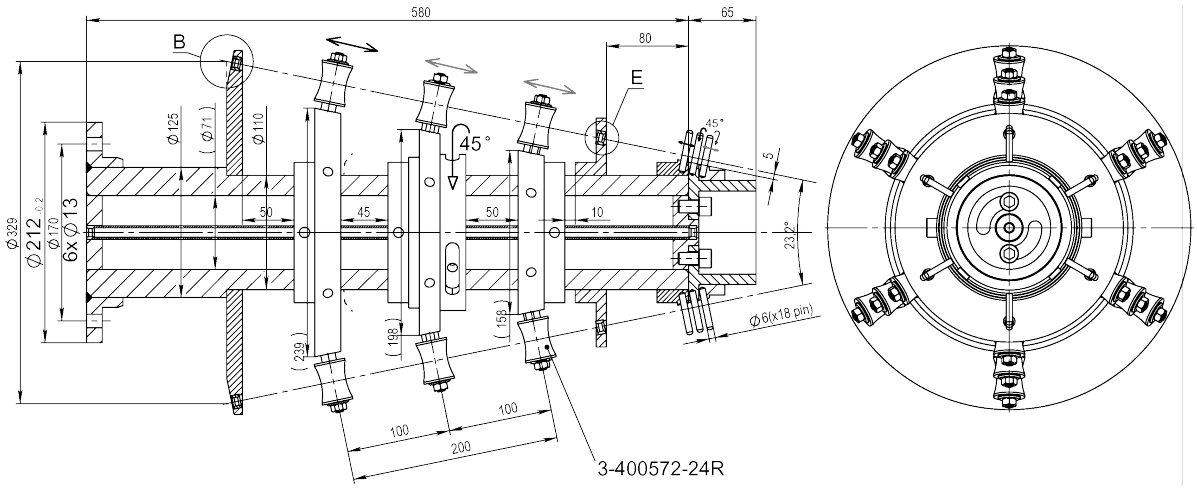

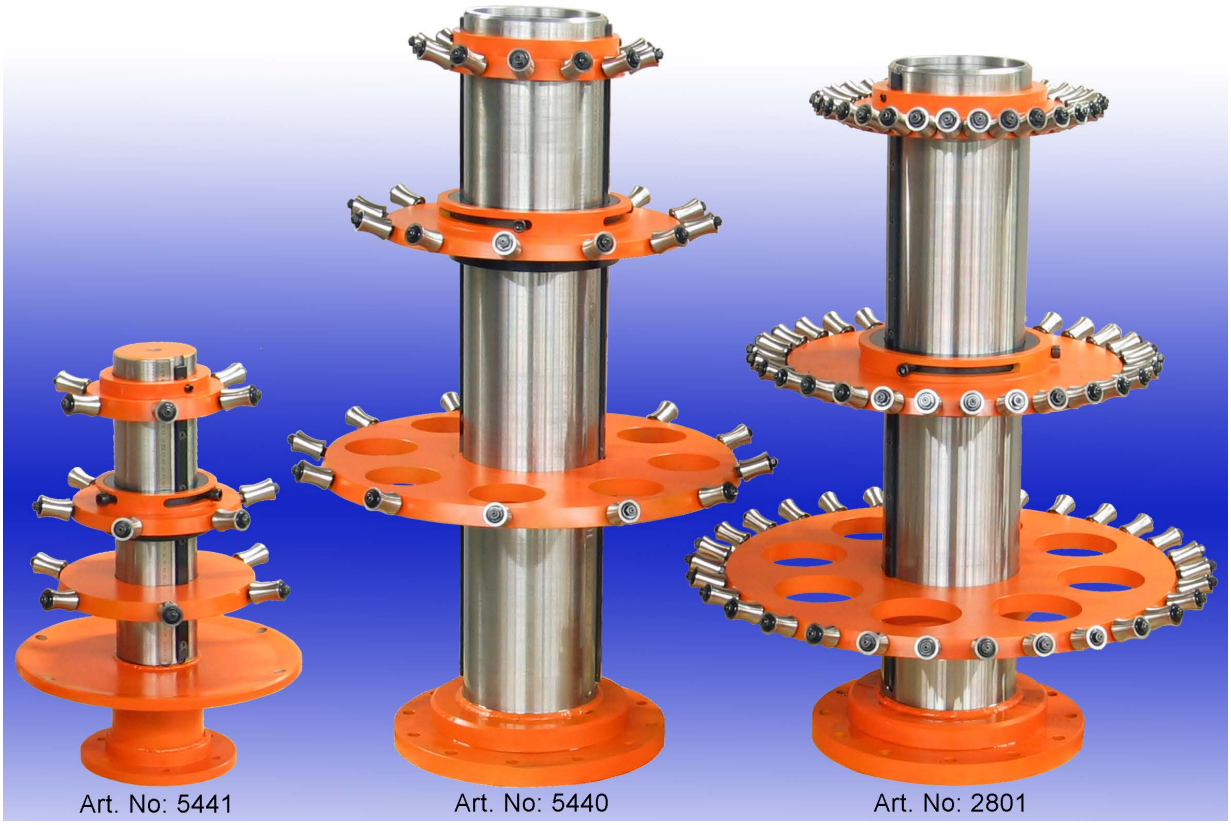

Drawing No. 3-400572-XX

Subec AB **Hesselmans Torg 5** **SE- 131 54 Nacka** **Sweden** **Phone: +46-8-88 46 33** **Email: info@subec.se** **Web: www.subec.se**

Copyright © 2026 Subec

PREFORMER - TANGENTIAL DEFORMATION

For stranding machines with 12 positions

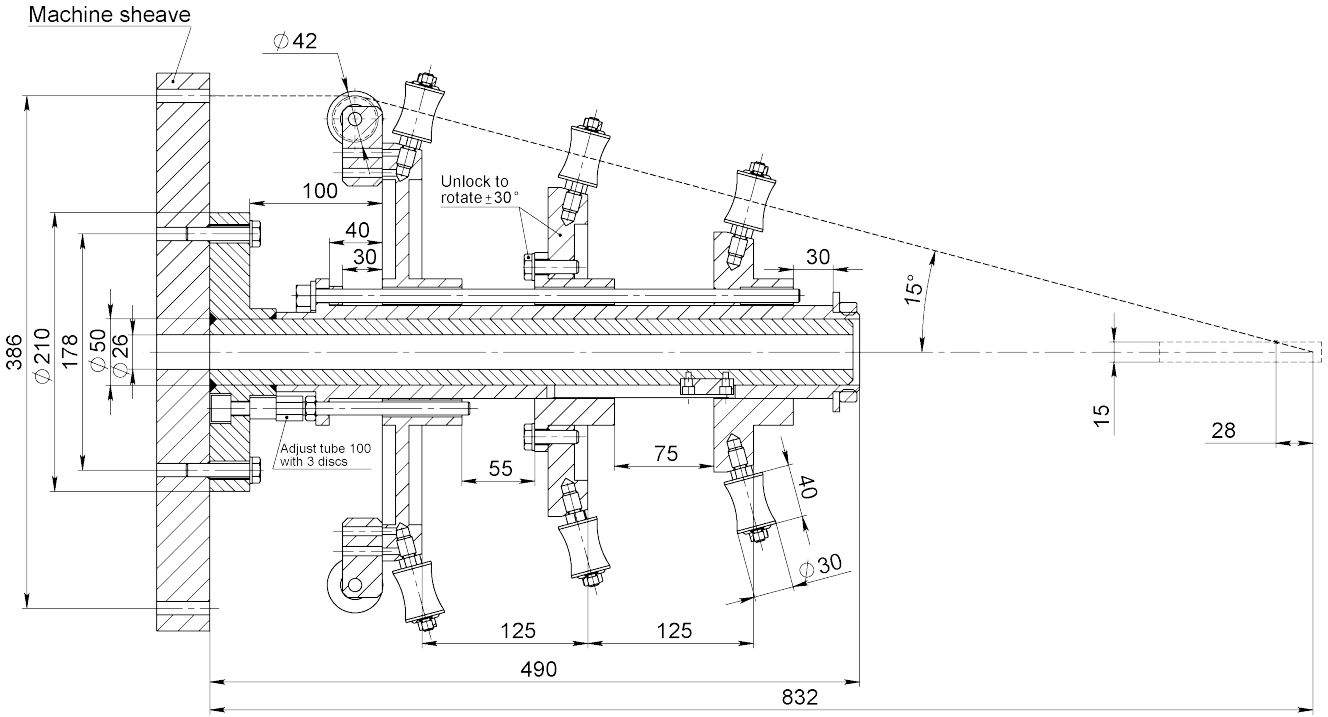

Article: 07390

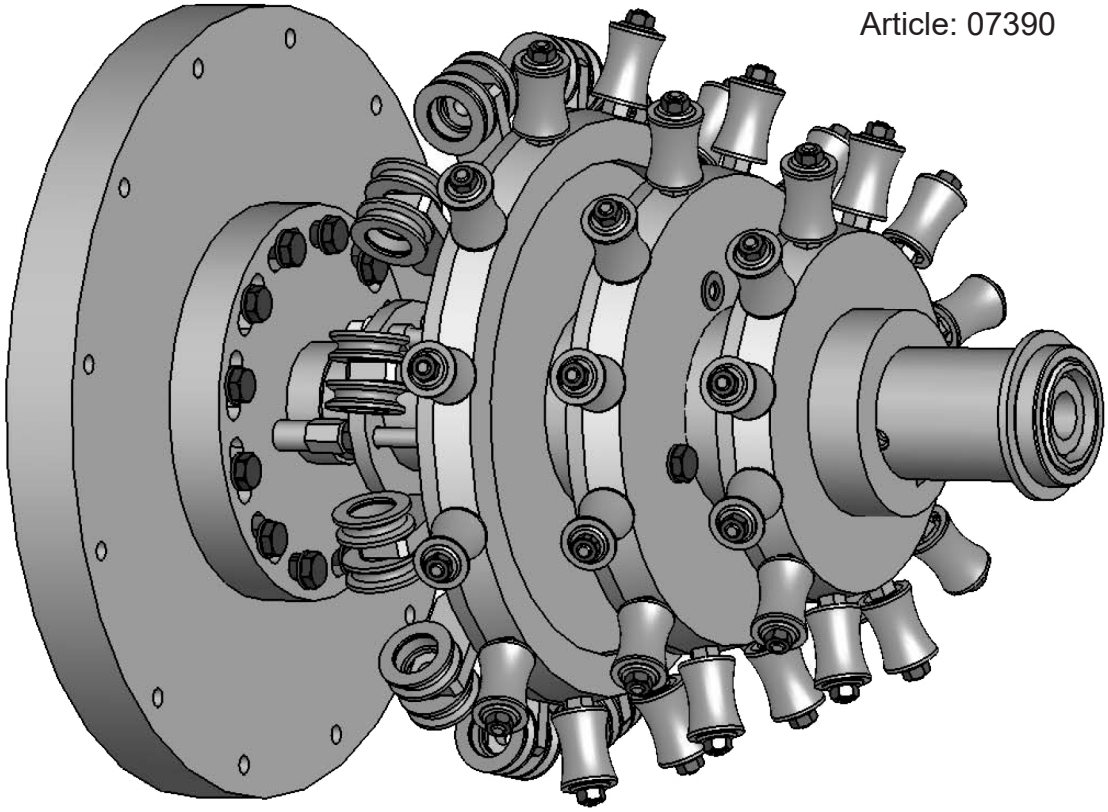

Drawing No. 3-400617-60

Subec AB **Hesselmans Torg 5** **SE- 131 54 Nacka** **Sweden** **Phone: +46-8-88 46 33** **Email: info@subec.se** **Web: www.subec.se**

Copyright © 2026 Subec

PREFORMER - RADIAL DEFORMATION

For stranding machines with 12 positions

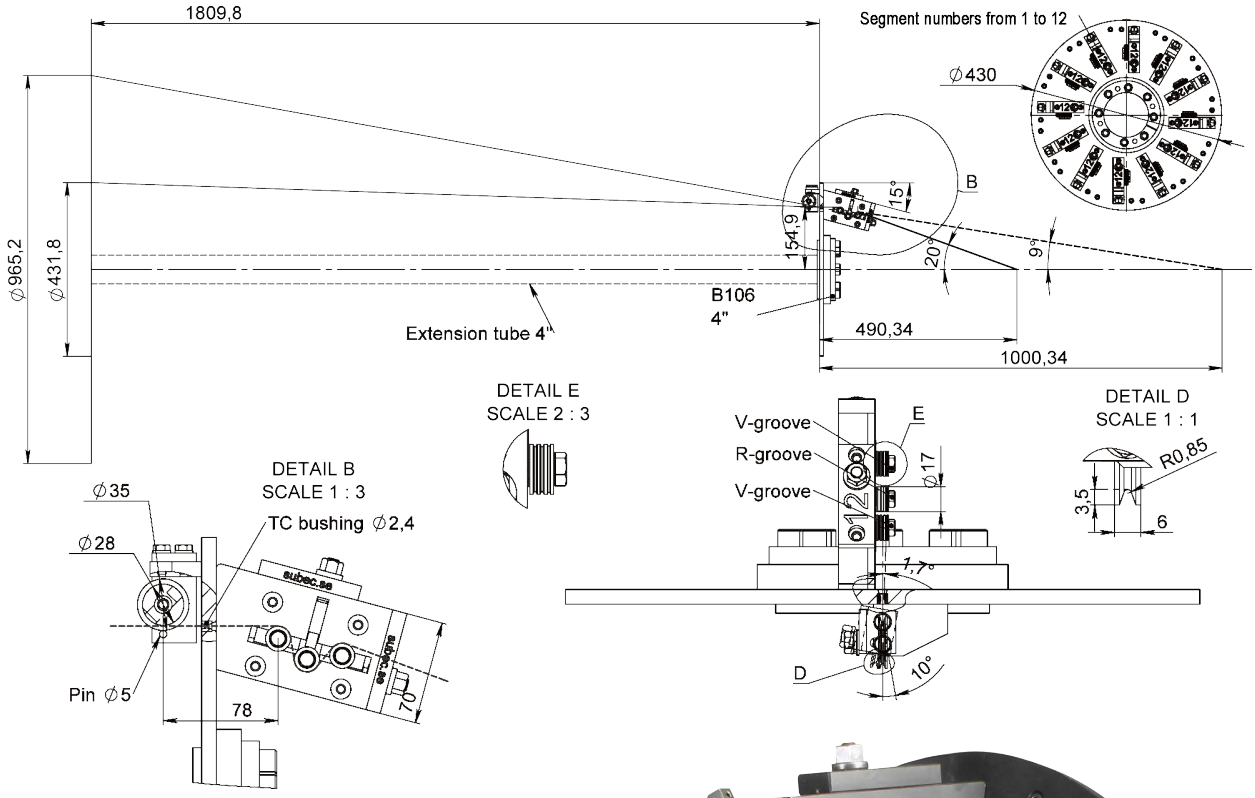



Article: 13683

Drawing No. 3-400513-12

Subec AB **Hesselmans Torg 5** **SE- 131 54 Nacka** **Sweden** **Phone: +46-8-88 46 33** **Email: info@subec.se** **Web: www.subec.se**

Copyright © 2026 Subec

PREFORMER - TANGENTIAL DEFORMATION

For stranding machines with 12, 18 or 24 positions

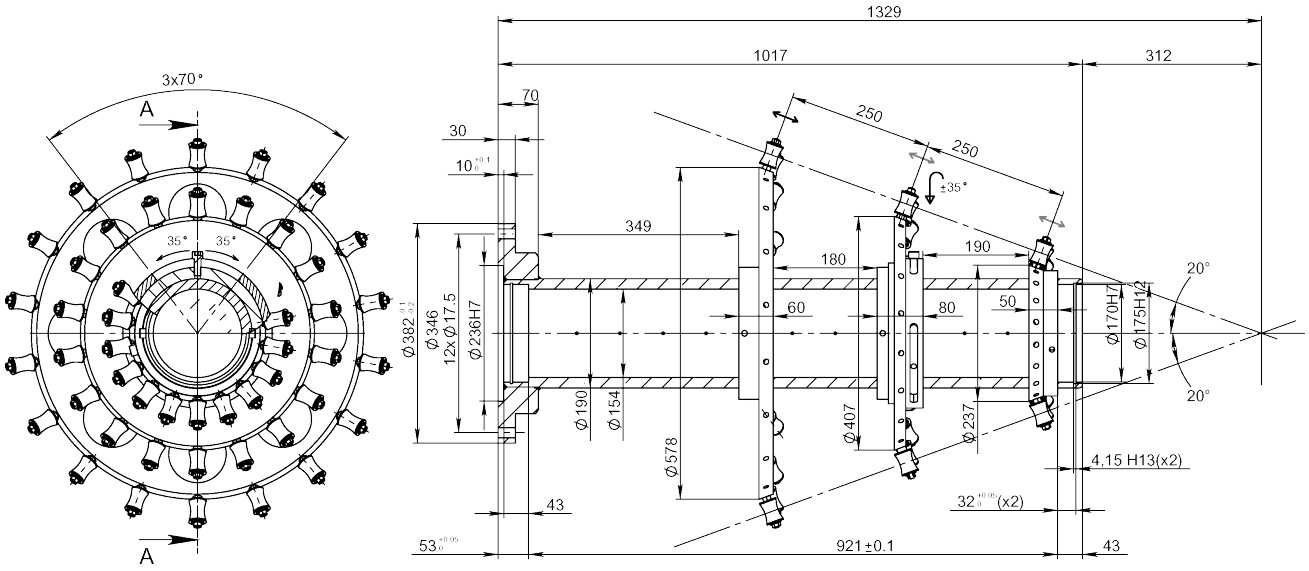



Drawing No. 3-400572-XX

Subec AB
Hesselmans Torg 5
SE- 131 54 Nacka
Sweden
Phone: +46-8-88 46 33
Email: info@subec.se
Web: www.subec.se

Copyright © 2026 Subec

PREFORMER - TANGENTIAL DEFORMATION

For stranding machines with 12 or 18 positions

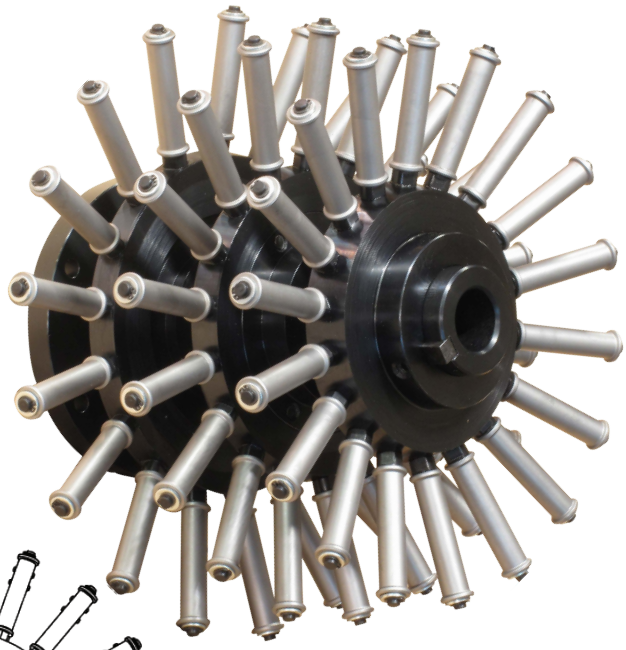

18 Positions
Article: 8882

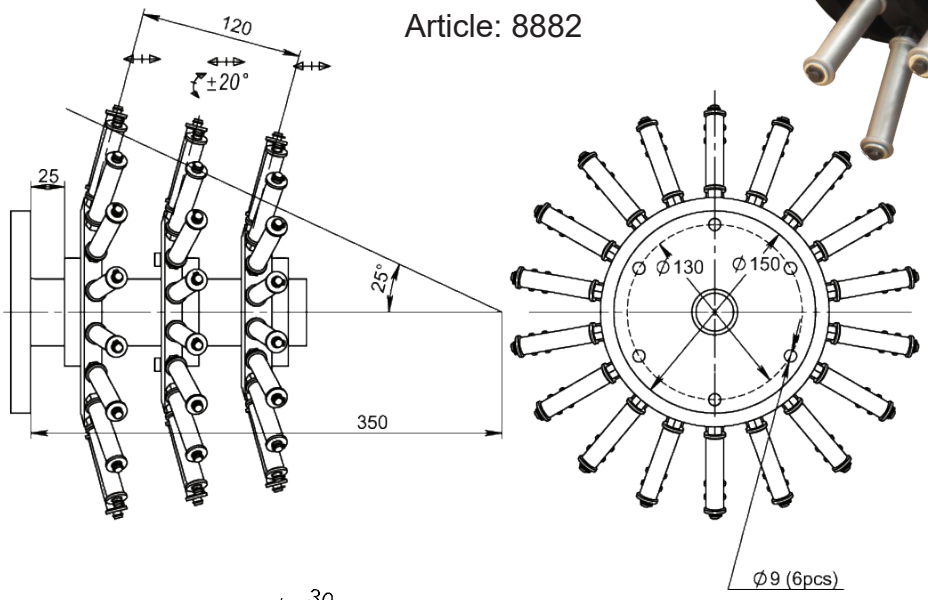

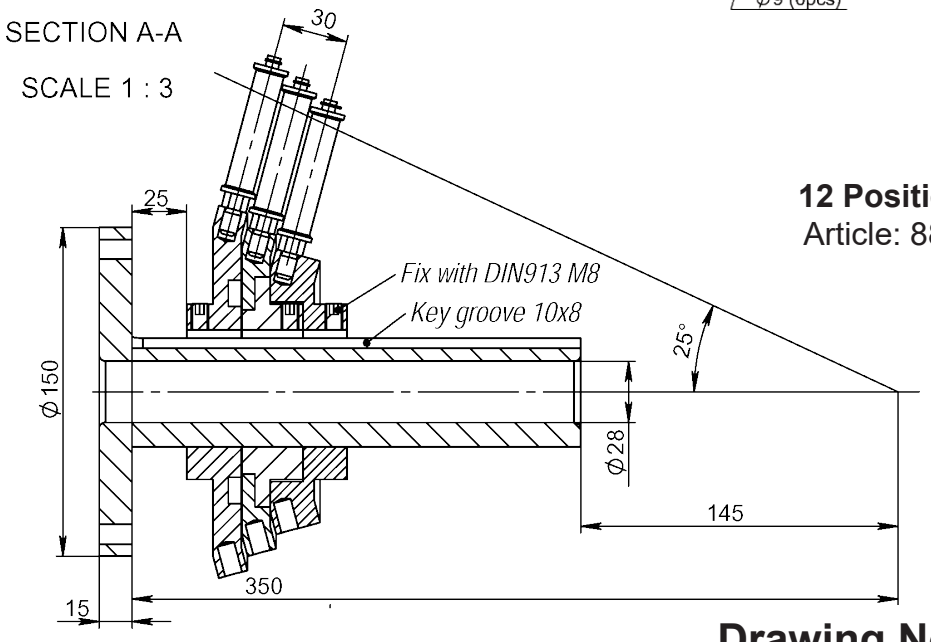

12 Positions
Article: 8804

Drawing No. 3-401134-XX

Subec AB **Hesselmans Torg 5** **SE- 131 54 Nacka** **Sweden** **Phone: +46-8-88 46 33** **Email: info@subec.se** **Web: www.subec.se**

Copyright © 2026 Subec

PREFORMER - TANGENTIAL DEFORMATION

For stranding machines with 60 positions

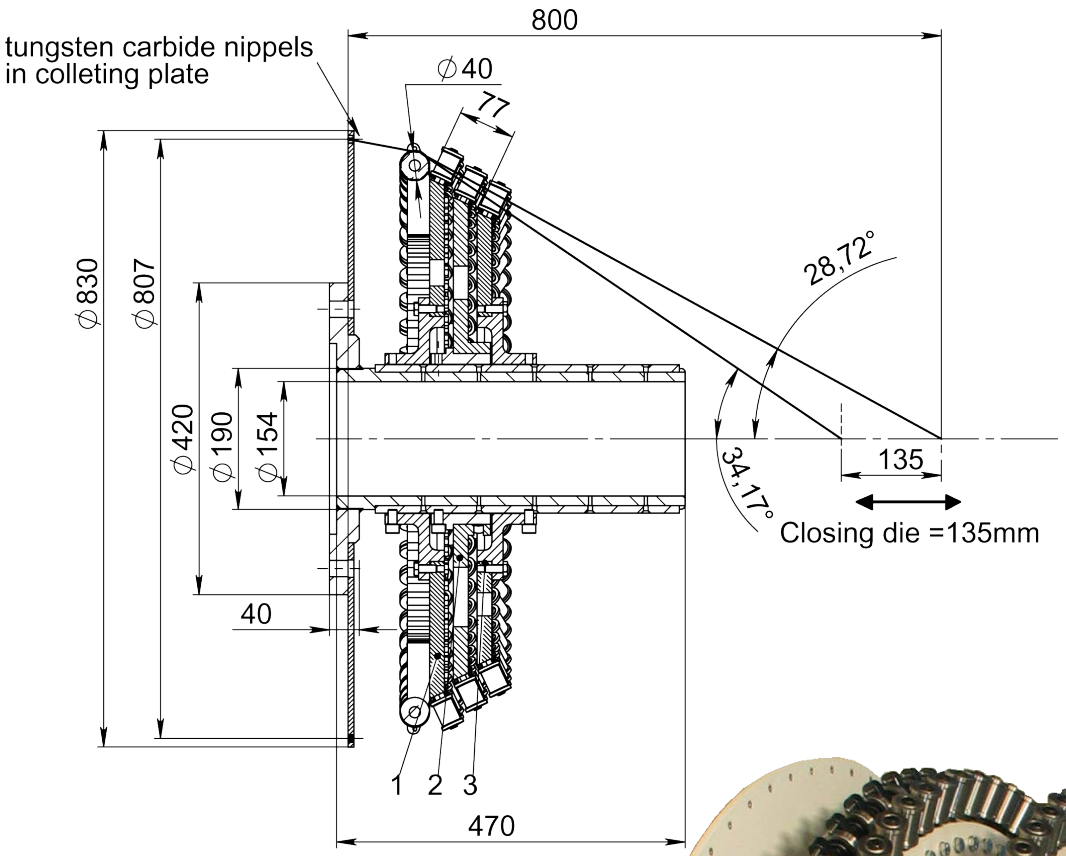

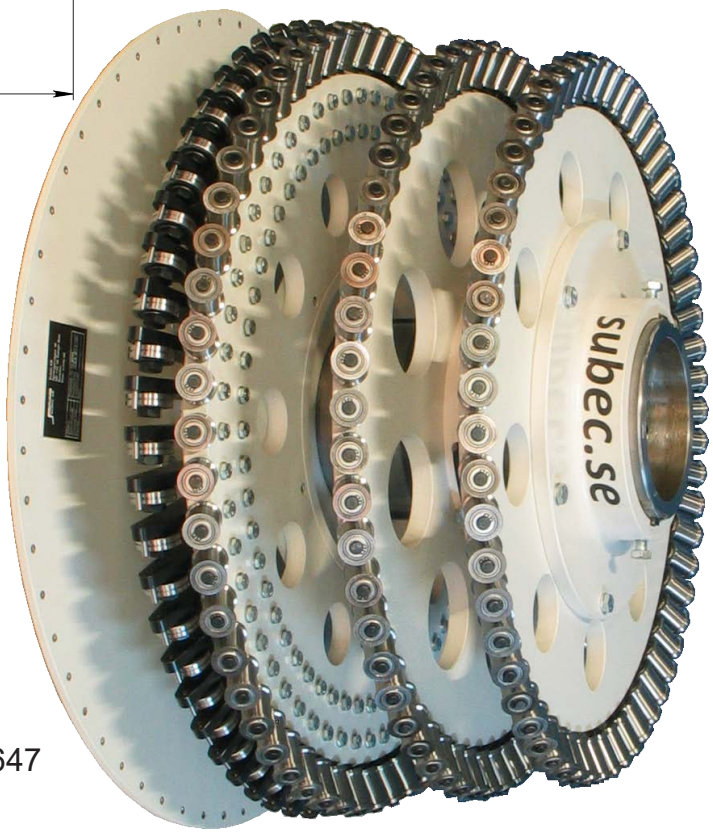

Article: 7647

Drawing No. 3-400572-00

Subec AB **Hesselmans Torg 5** **SE- 131 54 Nacka** **Sweden** **Phone: +46-8-88 46 33** **Email: info@subec.se** **Web: www.subec.se**

Copyright © 2026 Subec

PREFORMER - TANGENTIAL DEFORMATION

For stranding machines with 60 positions

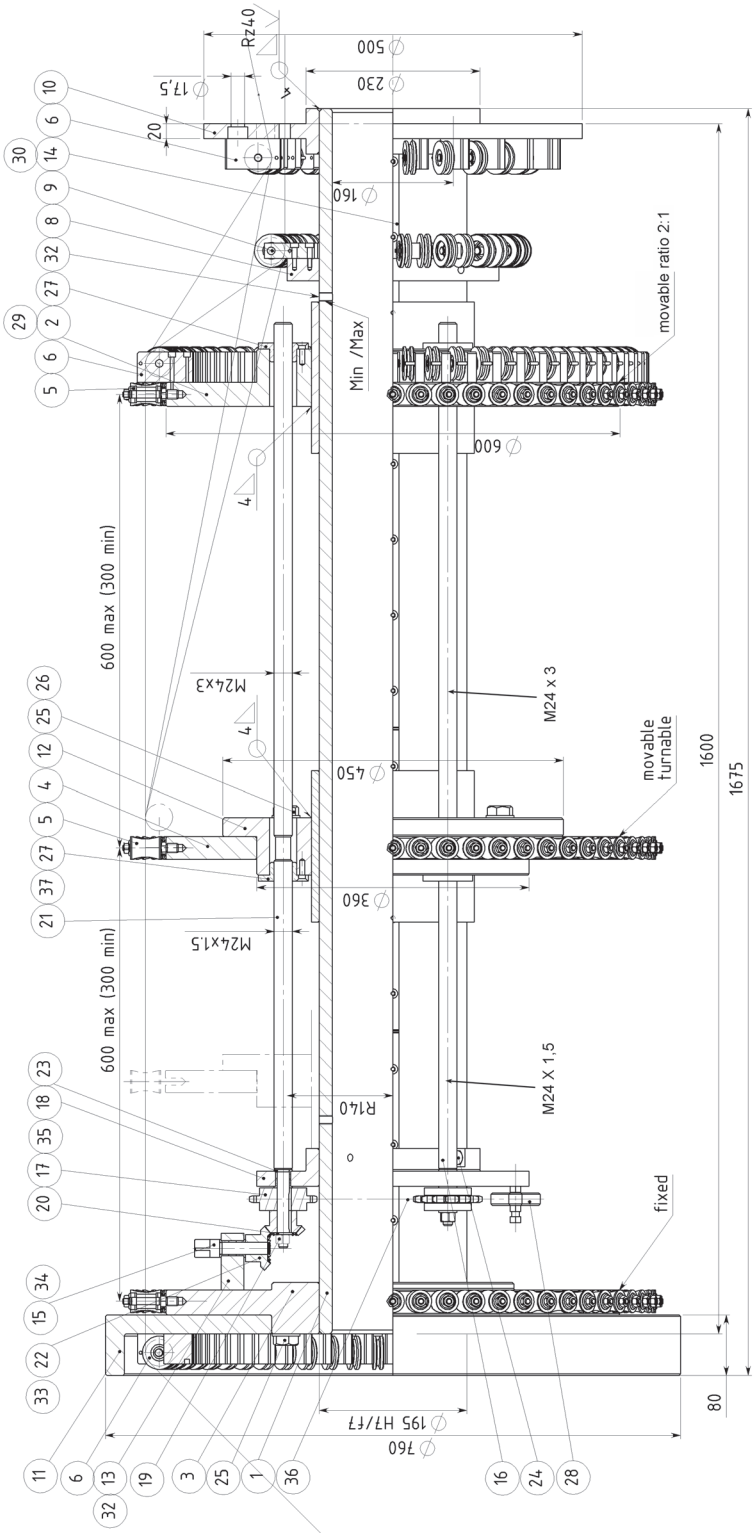

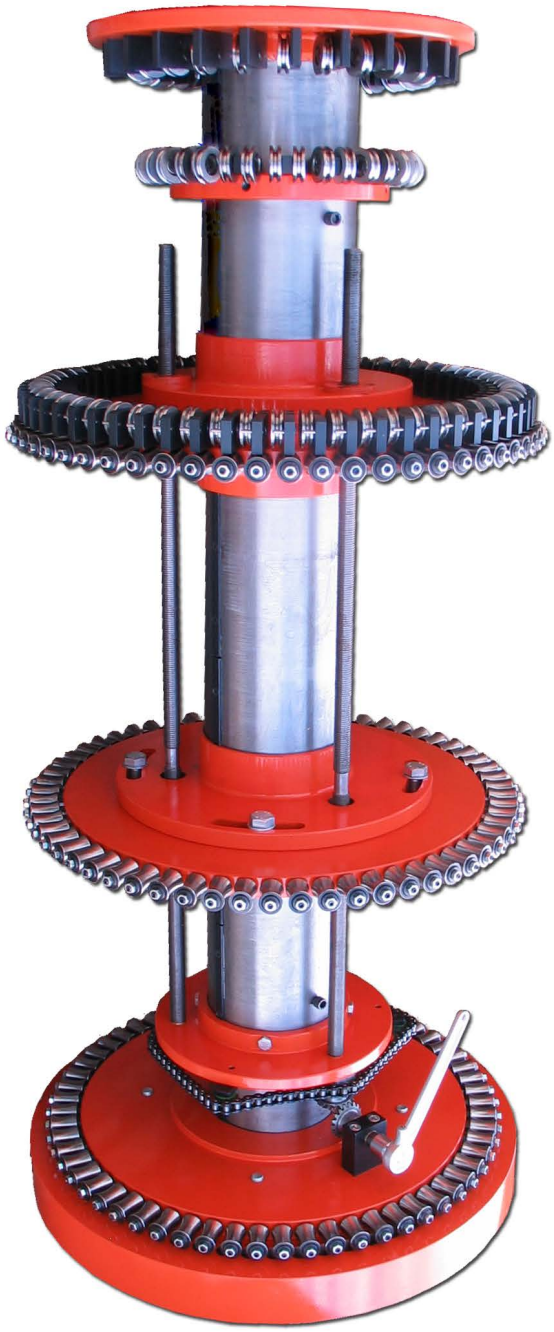

Drawing No. 3-400617-60

Subec AB **Hesselmans Torg 5** **SE- 131 54 Nacka** **Sweden** **Phone: +46-8-88 46 33** **Email: info@subec.se** **Web: www.subec.se**

Copyright © 2026 Subec

PREFORMER - TANGENTIAL DEFORMATION

For stranding machines with 64/72 positions

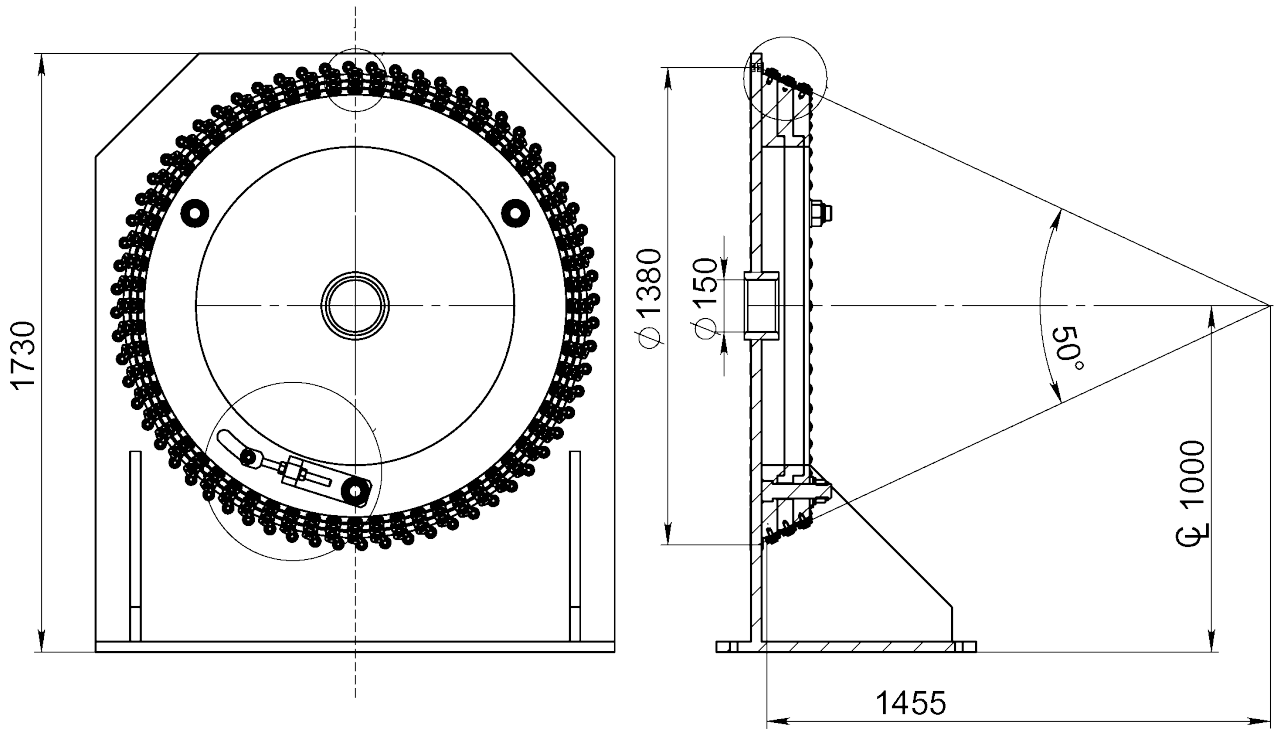

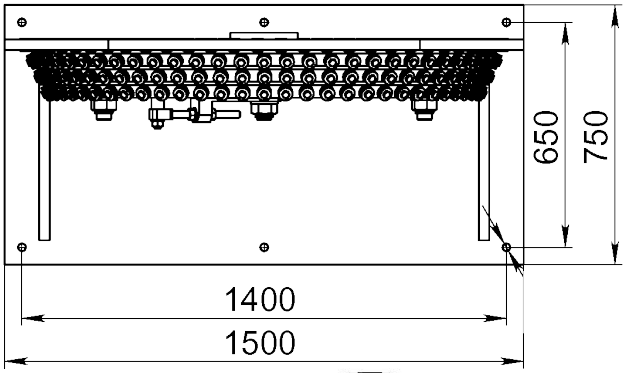

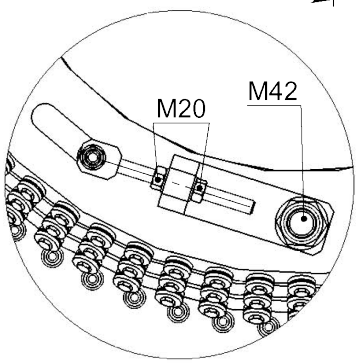

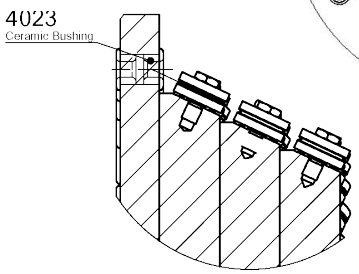

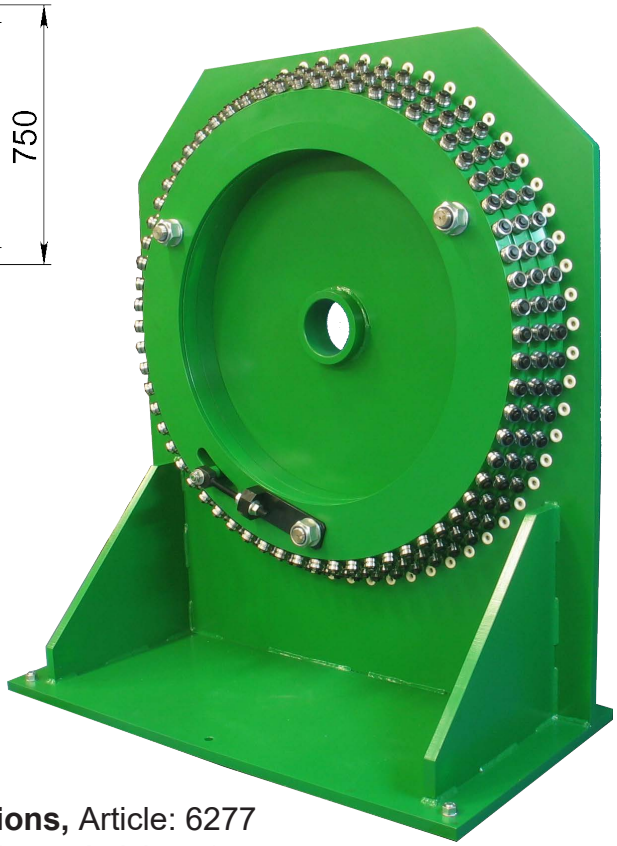

64 Positions, Article: 6277
72 Positions, Article: 6192

Drawing No. 3-400835-00

Subec AB
Hesselmans Torg 5
SE- 131 54 Nacka
Sweden
Phone: +46-8-88 46 33
Email: info@subec.se
Web: www.subec.se

Copyright © 2026 Subec

POSTFORMING OF STEEL ROPE

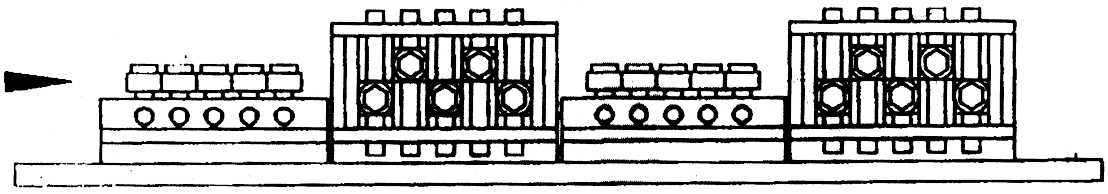

Execution with 4 Straigteners
AA = All rollers individually adjustable

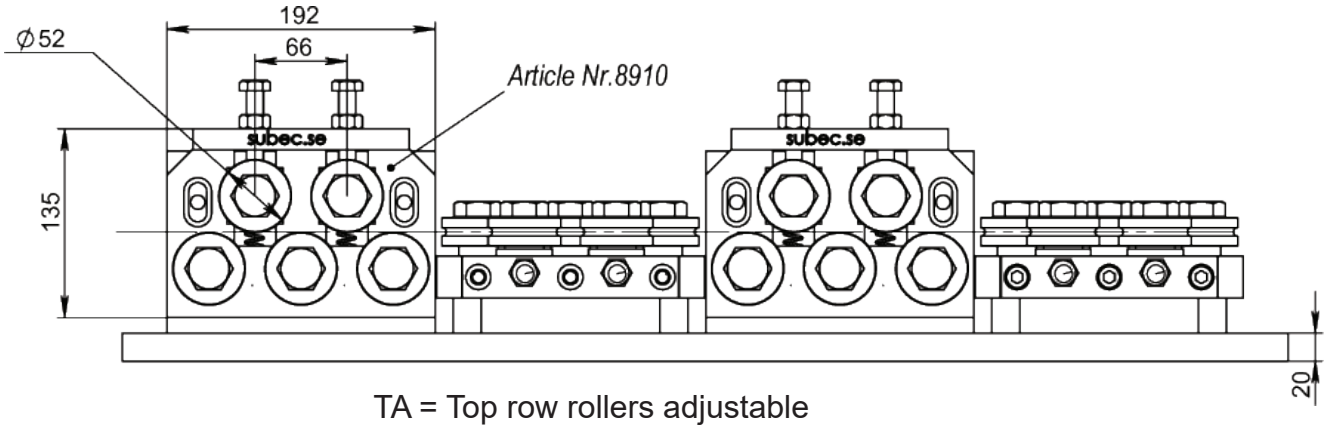

TA = Top row rollers adjustable

Info:
Postformers are used after preformers to straighten and compact the steel rope. For info on preformers see previous pages in the chapter.

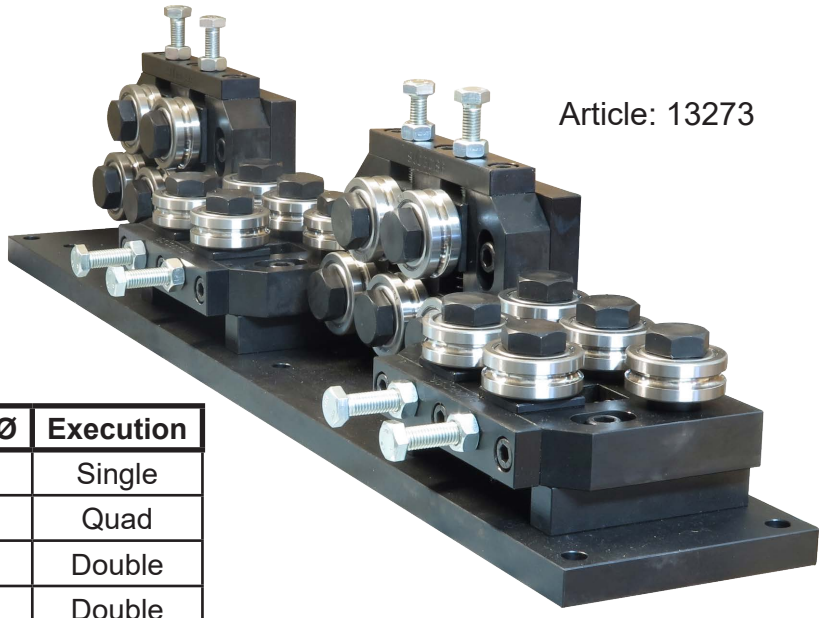

Article: 13273

Article	Rollers	Product Ø	Execution
08910	SD52	6,0-9,5	Single
13273	SD52	6,0-9,5	Quad
09013	SS52-SS47	4,0-7,2	Double
09014	SS52-SS52	6,0-8,4	Double
09015	SS62-SS62	6,5-10	Double

Drawing No. 3-400740-00

Subec AB **Hesselmans Torg 5** **SE- 131 54 Nacka** **Sweden** **Phone: +46-8-88 46 33** **Email: info@subec.se** **Web: www.subec.se**

Copyright © 2026 Subec

FORMING BLOCK, SL D120 L90

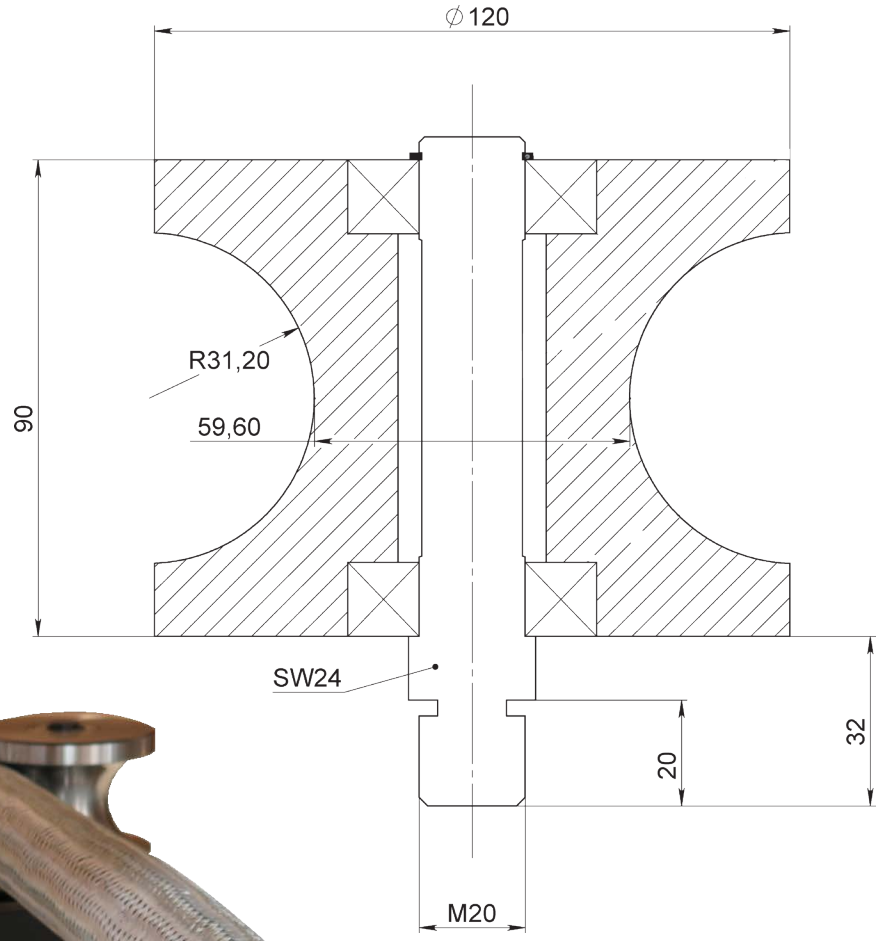



Article: 8480 + 2450

Drawing No. 3-400830-00

Subec AB **Hesselmans Torg 5** **SE- 131 54 Nacka** **Sweden** **Phone: +46-8-88 46 33** **Email: info@subec.se** **Web: www.subec.se**

Copyright © 2026 Subec

CALIBRATION UNIT C 40/80-HWSY-2

HW-SY = Open/close symmetric to centreline by handwheel



C 80-HWSY-2
Max Product Ø: 27mm
Roller Ø: 80mm
Article: 5933
Weight: 40kg

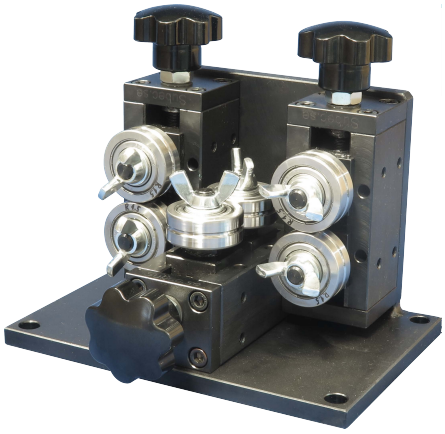

C 40-HWSY-2
Max Product Ø: 6mm
Roller Ø: 40mm
Article: 11359
Weight: 10kg

Drawing shows
Article: 5933

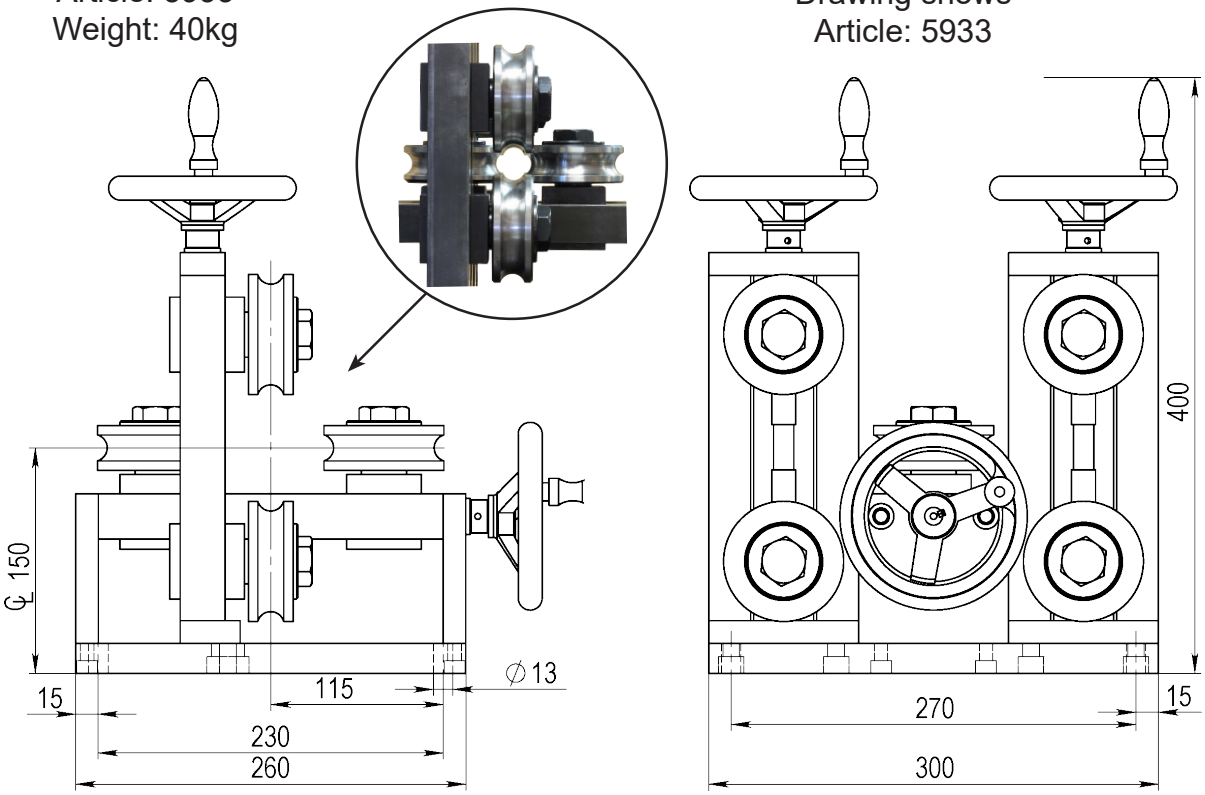

Drawing No. 3-400808-00

Subec AB **Hesselmans Torg 5** **SE- 131 54 Nacka** **Sweden** **Phone: +46-8-88 46 33** **Email: info@subec.se** **Web: www.subec.se**

Copyright © 2026 Subec

CALIBRATION UNIT C110-HWSY-2

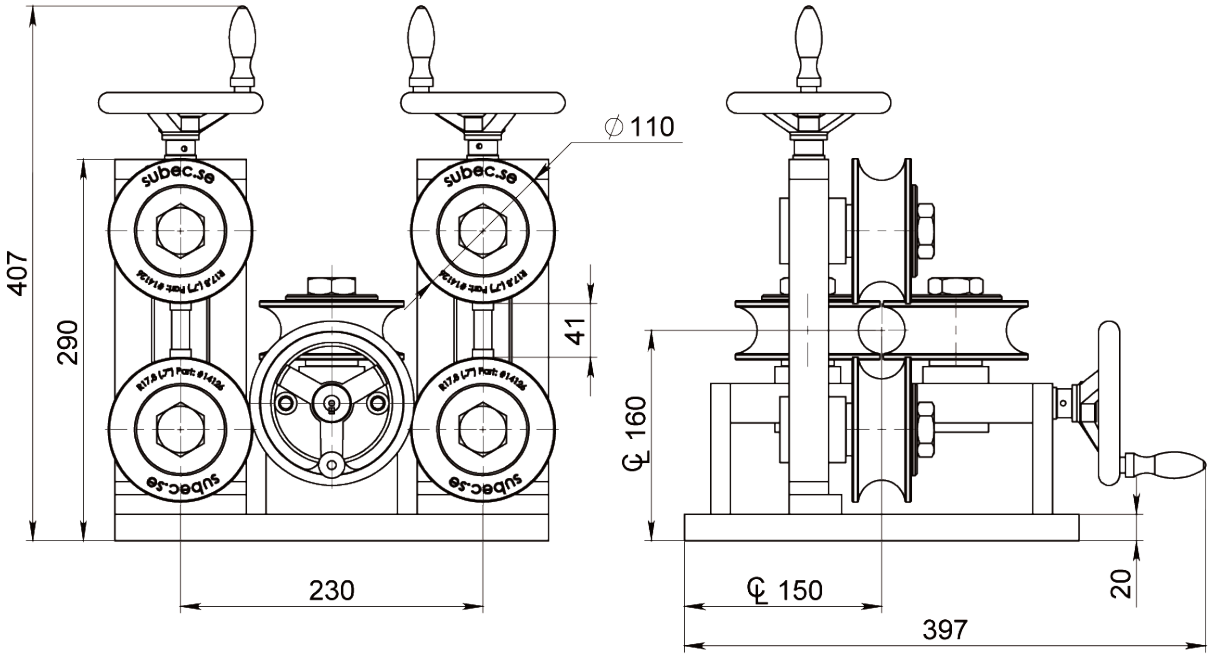

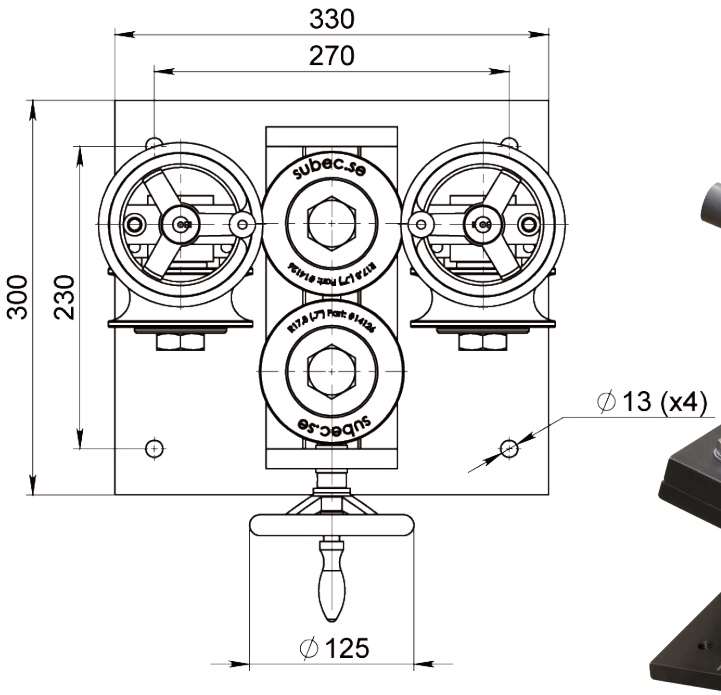

Calibration unit.
Article: 14127
Weight: 45kg



Angle adjustable baseplate.
Article: 14174
Weight: 27kg

Drawing No. 3-400808-00

Subec AB **Hesselmans Torg 5** **SE- 131 54 Nacka** **Sweden** **Phone: +46-8-88 46 33** **Email: info@subec.se** **Web: www.subec.se**

Copyright © 2026 Subec

DRIVEN CALIBRATION UNIT, A-160-D-HW-M

Example: For Alu/Plastic Tubes

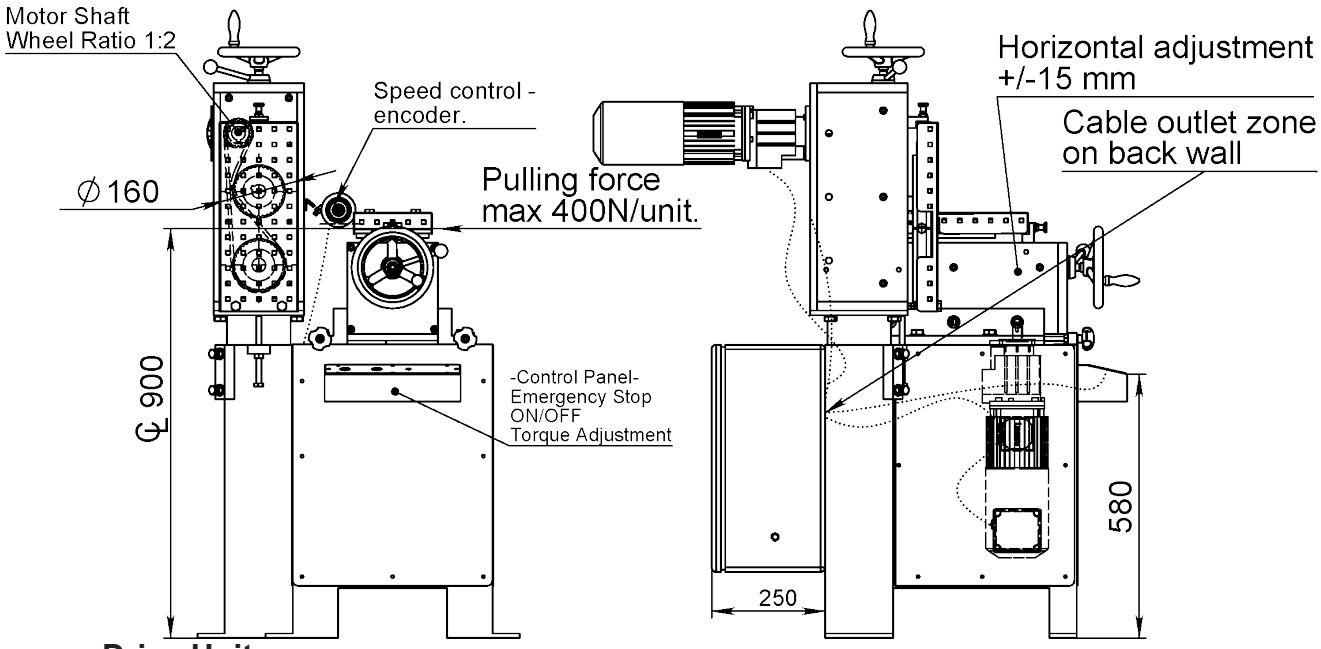

Drive Unit
2 pcs A-160-S-HW
Draw 3-400630-01/3631

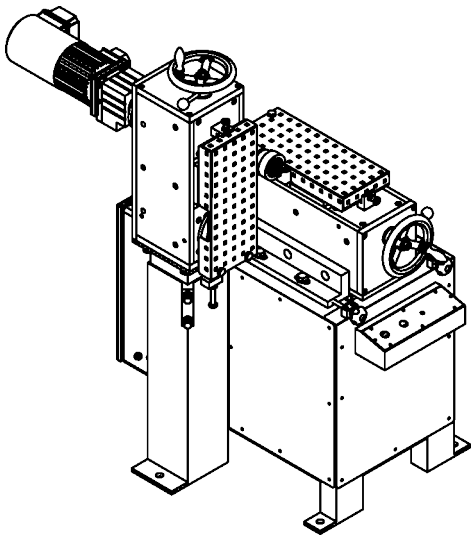

HW = Open/close by handwheel



Article: 5887
Weight: 300kg

Drawing No. 3-400823-00

Subec AB **Hesselmans Torg 5** **SE- 131 54 Nacka** **Sweden** **Phone: +46-8-88 46 33** **Email: info@subec.se** **Web: www.subec.se**

Copyright © 2026 Subec

CALIBRATION UNIT, C 200-L-2

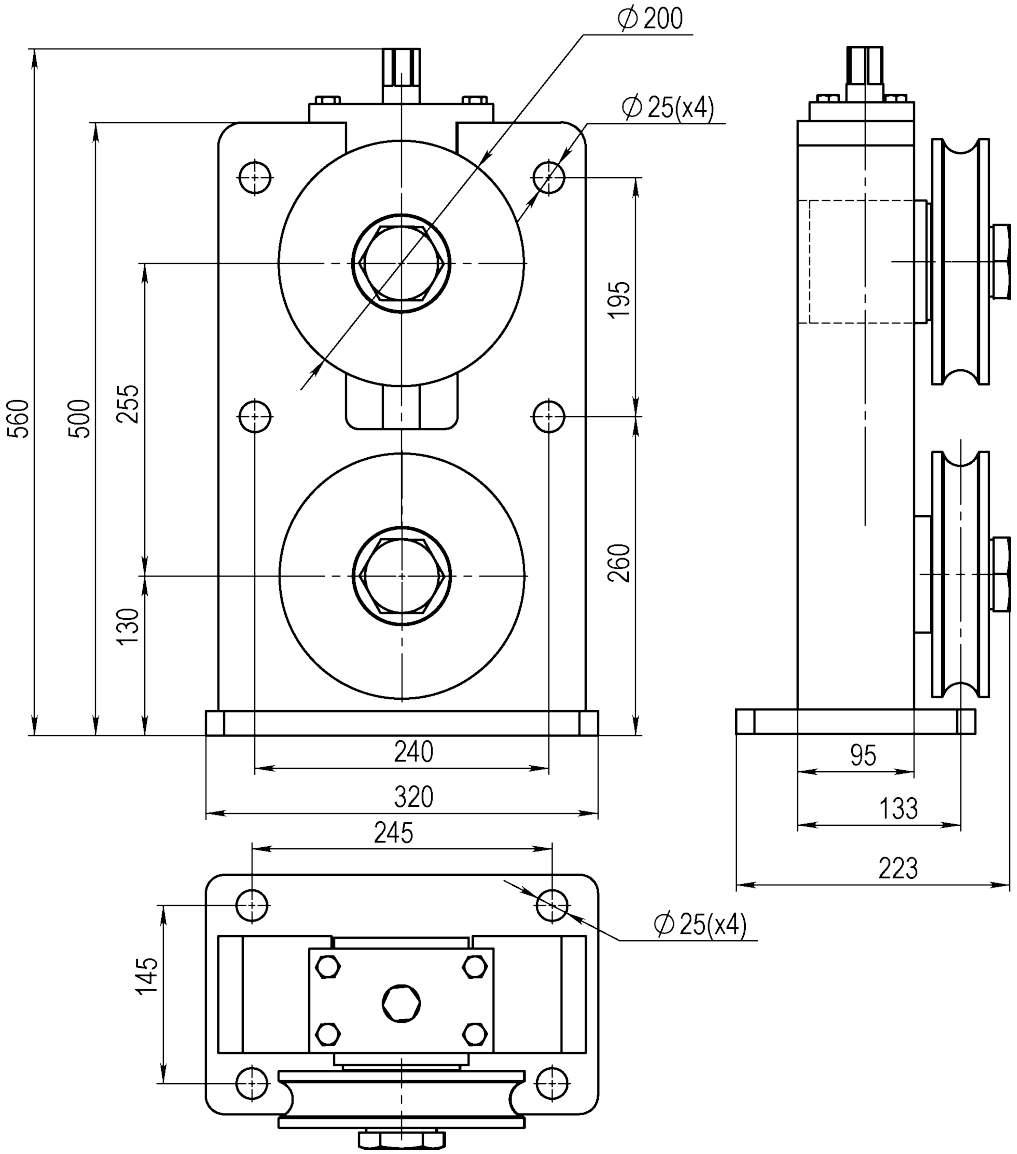



Article: 05753

Drawing No. 3-400808-00

Subec AB **Hesselmans Torg 5** **SE- 131 54 Nacka** **Sweden** **Phone: +46-8-88 46 33** **Email: info@subec.se** **Web: www.subec.se**

Copyright © 2026 Subec

COMPACTING UNIT, 3-JAW CHUCK

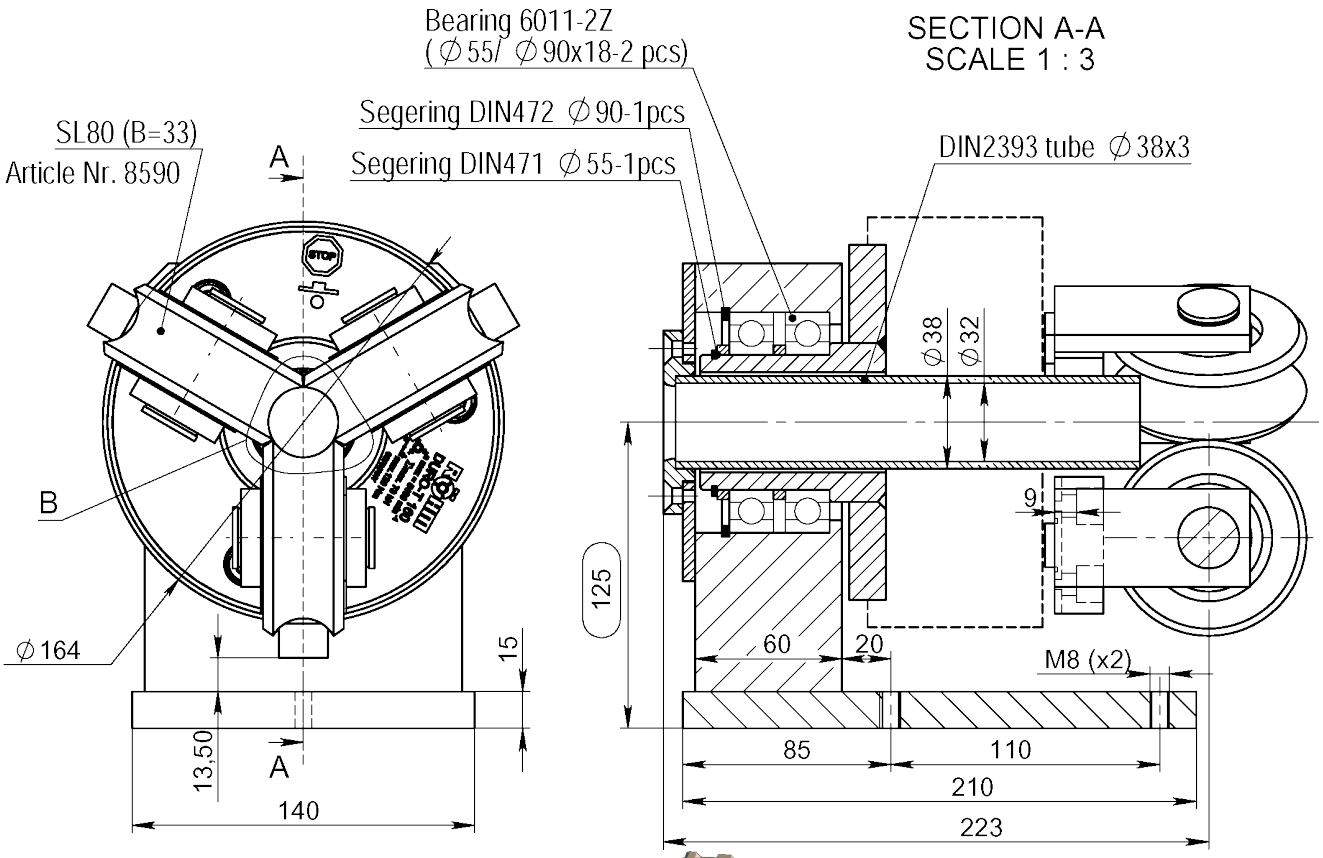

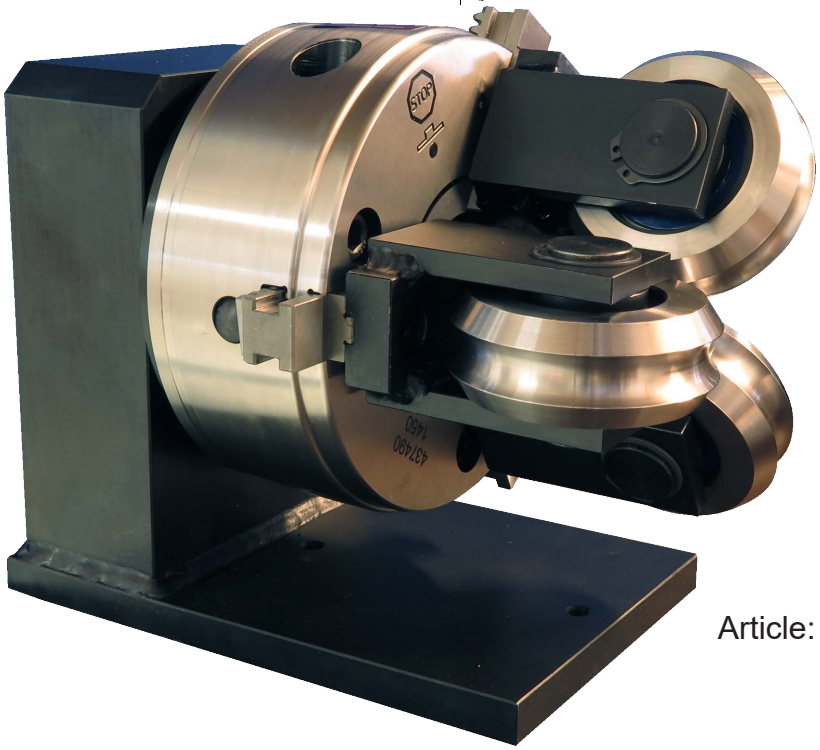

Article: 08498

Drawing No. 3-400830-00

Subec AB **Hesselmans Torg 5** **SE- 131 54 Nacka** **Sweden** **Phone: +46-8-88 46 33** **Email: info@subec.se** **Web: www.subec.se**

Copyright © 2026 Subec

FEEDING DRIVE UNIT A-80-S-HW

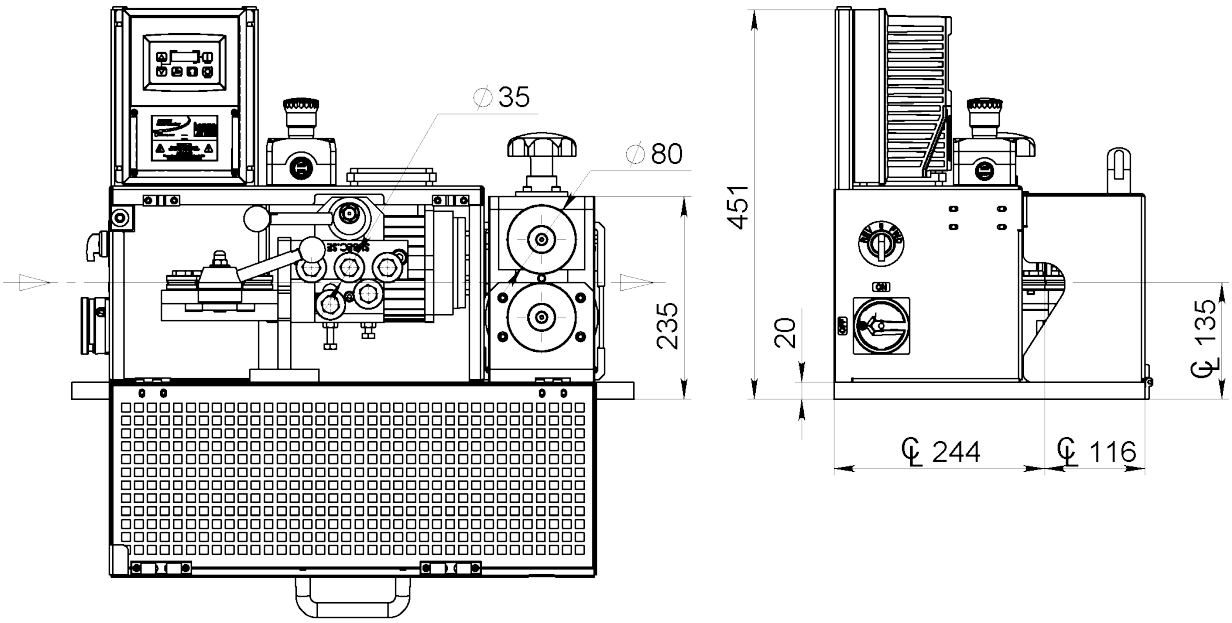

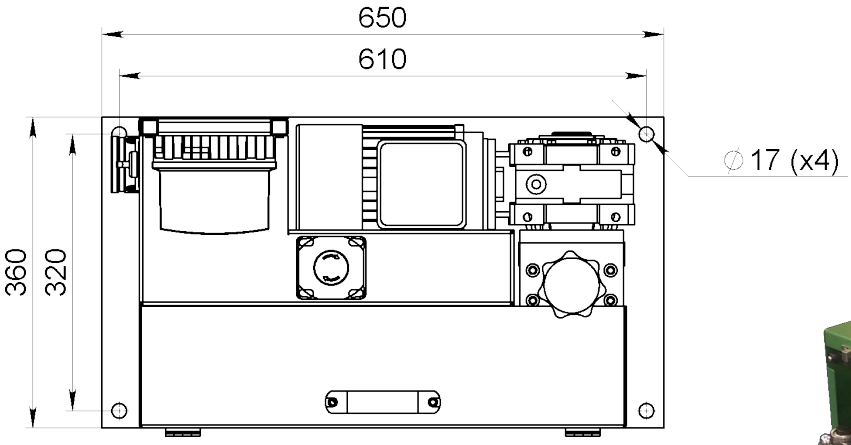



Article: 11066

Foot operated pedal

Drawing No. 3-401272-00

Subec AB **Hesselmans Torg 5** **SE- 131 54 Nacka** **Sweden** **Phone: +46-8-88 46 33** **Email: info@subec.se** **Web: www.subec.se**

Copyright © 2026 Subec

SINGLE DRIVE AND STRAIGHTENING SYSTEM A-100-S-M

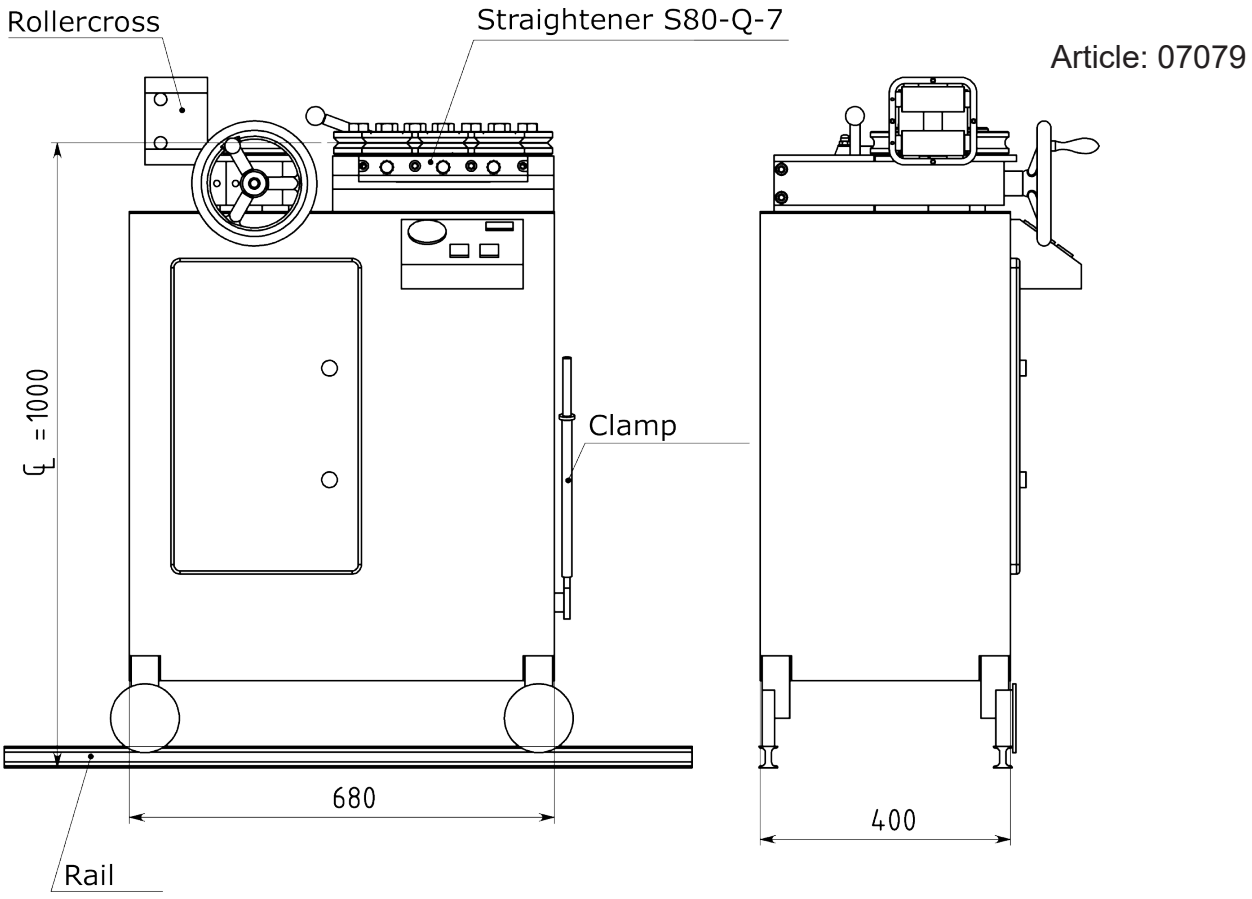

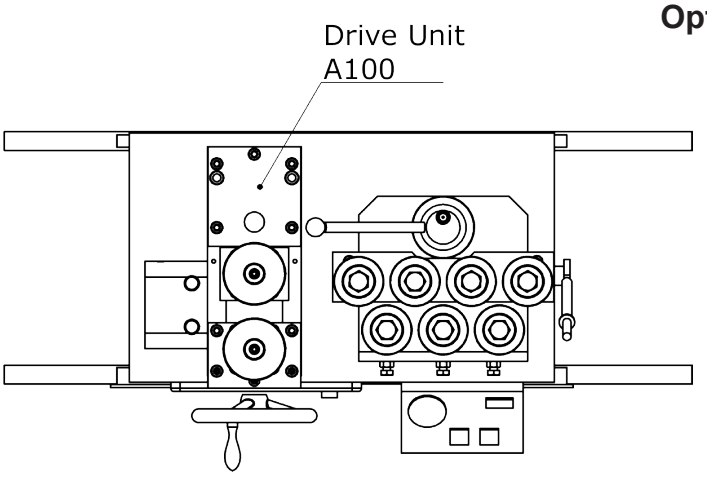

Option: With Standing Drive Unit
Article: 03631

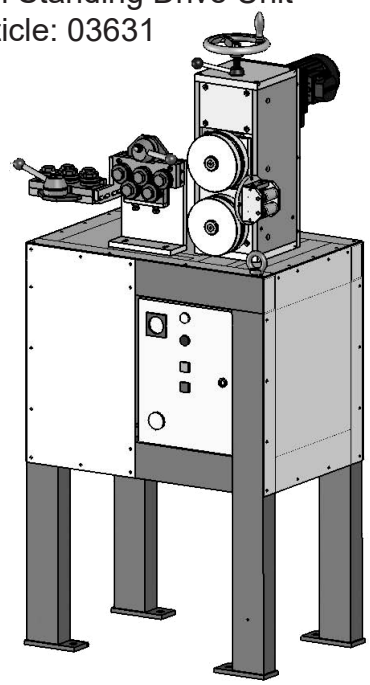

Drawing No. 3-400597-00

Subec AB
Hesselmans Torg 5
SE- 131 54 Nacka
Sweden
Phone: +46-8-88 46 33
Email: info@subec.se
Web: www.subec.se

Copyright © 2026 Subec

FEEDING DRIVE UNIT A-160-S

With Wire Straightener 06280:

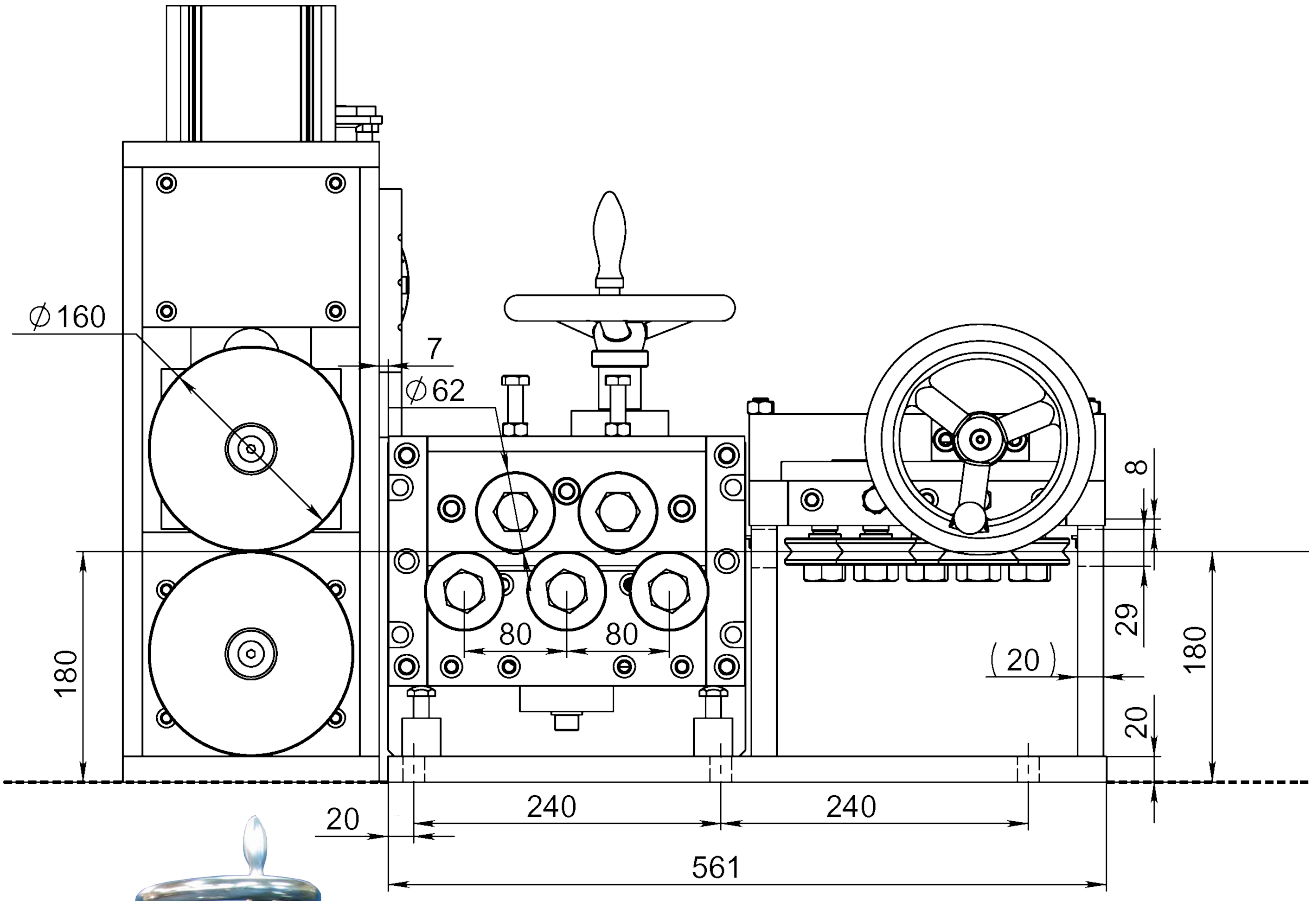



Option: With hand adjustment, position indicator and safety-cover
Article: 07658

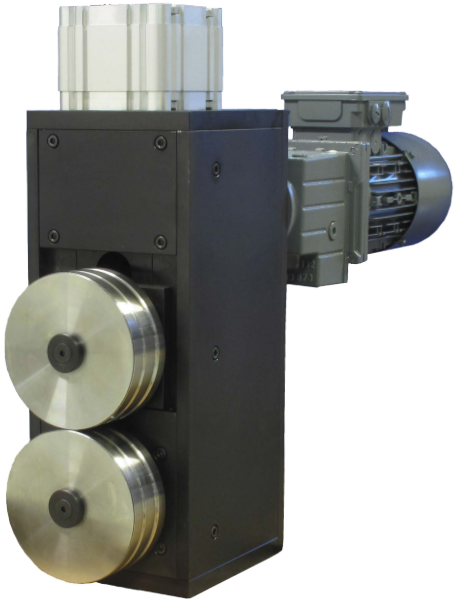

Article: 06280
Weight: 95kg

Drawing No. 3-400630-00

Subec AB **Hesselmans Torg 5** **SE- 131 54 Nacka** **Sweden** **Phone: +46-8-88 46 33** **Email: info@subec.se** **Web: www.subec.se**

Copyright © 2026 Subec

FEEDING DRIVE UNIT A-160-D-HYD

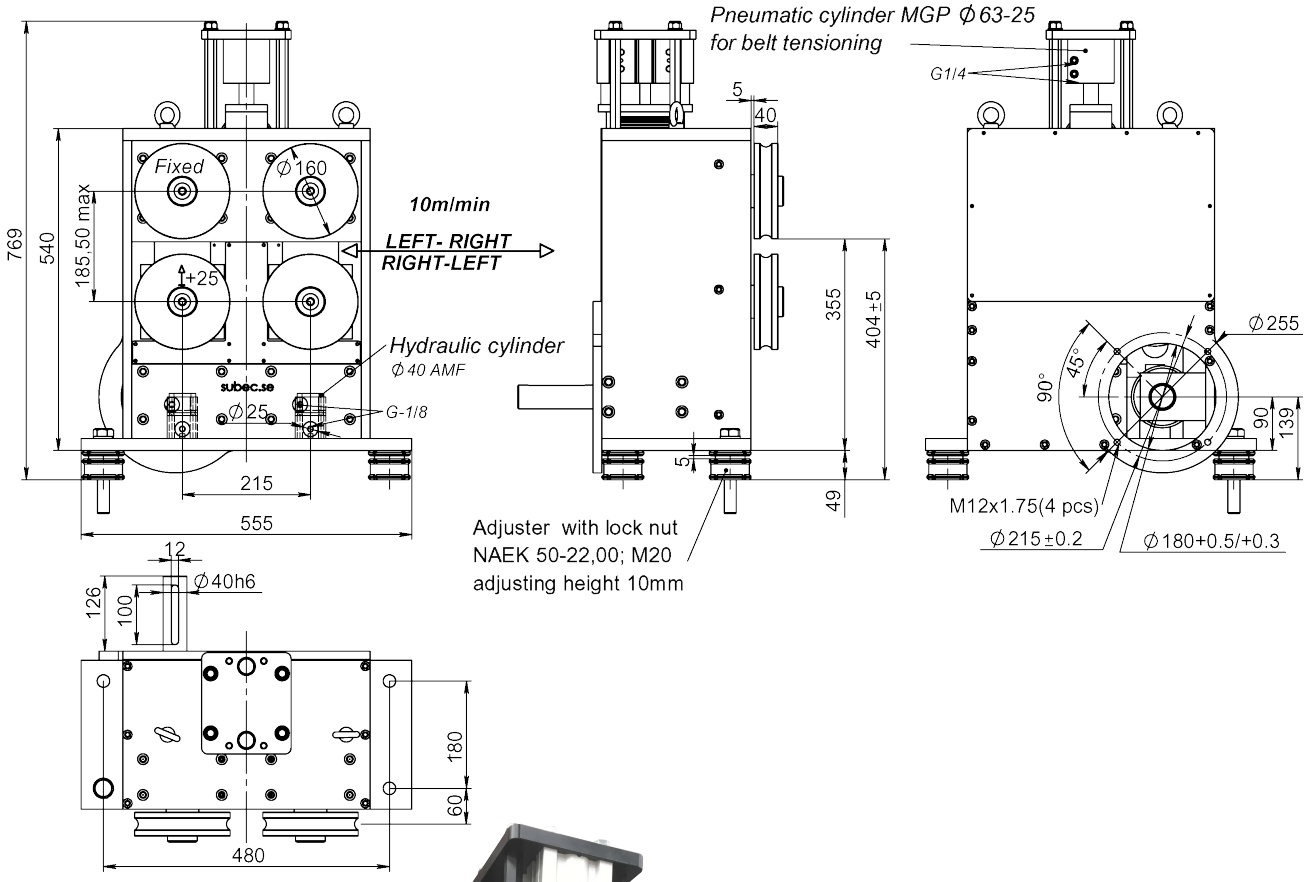



Article: 9635B
Weight: 270kg

Drawing No. 3-400630-00

Subec AB **Hesselmans Torg 5** **SE- 131 54 Nacka** **Sweden** **Phone: +46-8-88 46 33** **Email: info@subec.se** **Web: www.subec.se**

Copyright © 2026 Subec

SINGLE DRIVE AND STRAIGHTENING SYSTEM A-160-S-PN

Example of application: For Tape Ø 7-16mm

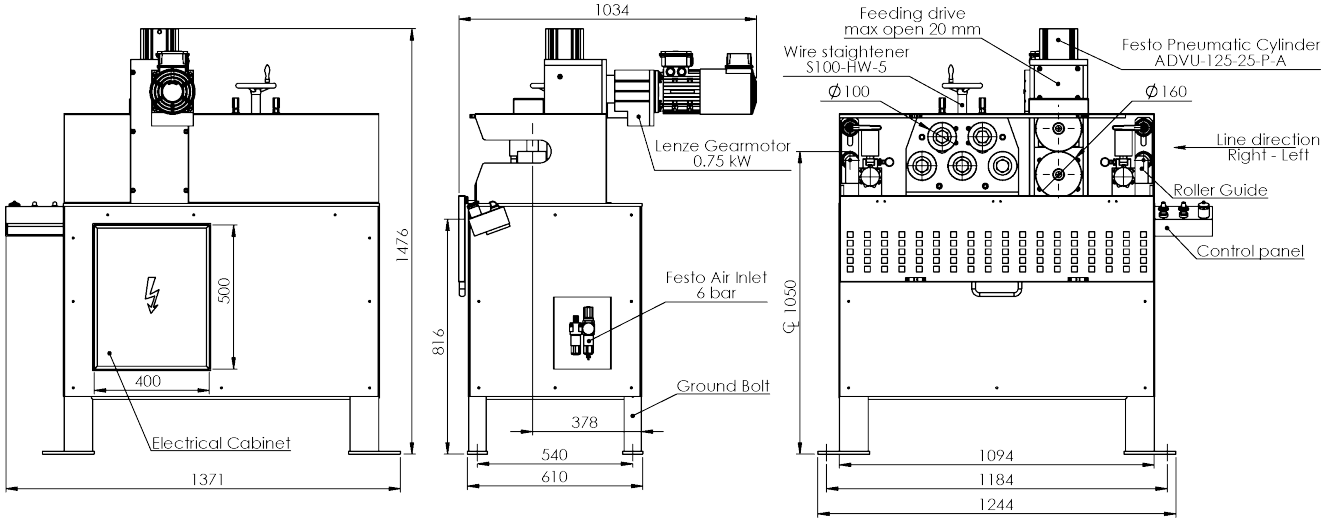



Article: 07903
Weight: 400kg

Drawing No. 3-400873-00

Subec AB **Hesselmans Torg 5** **SE- 131 54 Nacka** **Sweden** **Phone: +46-8-88 46 33** **Email: info@subec.se** **Web: www.subec.se**

Copyright © 2026 Subec

SINGLE DRIVE AND STRAIGHTENING SYSTEM A-160-S-PN

Example of application: For Wire Ø 7-16mm

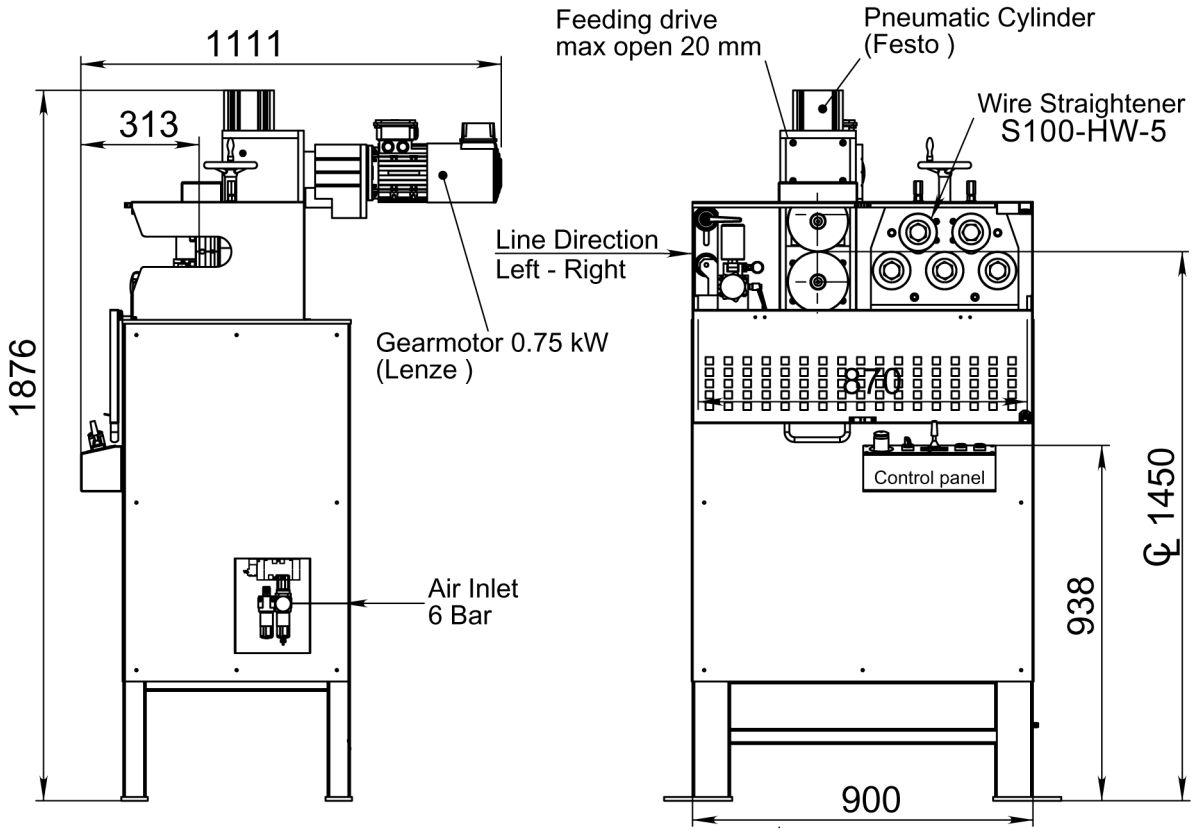



Article: 06203

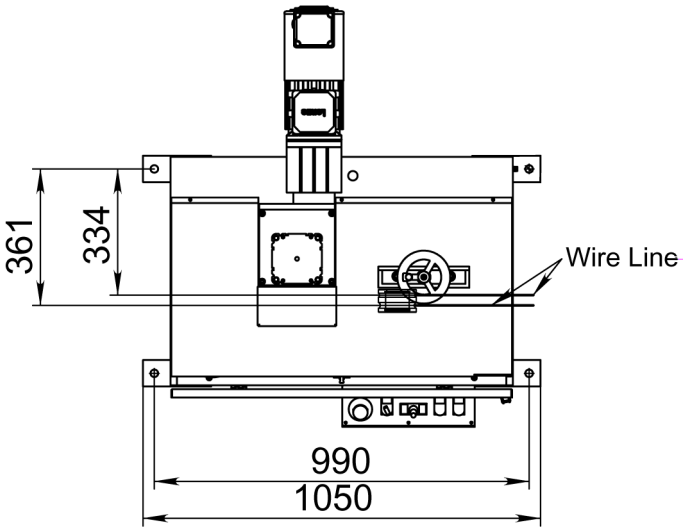

Drawing No. 3-400873-00

Subec AB **Hesselmans Torg 5** **SE- 131 54 Nacka** **Sweden** **Phone: +46-8-88 46 33** **Email: info@subec.se** **Web: www.subec.se**

Copyright © 2026 Subec

SINGLE DRIVE AND STRAIGHTENING SYSTEM A-160-S-HY

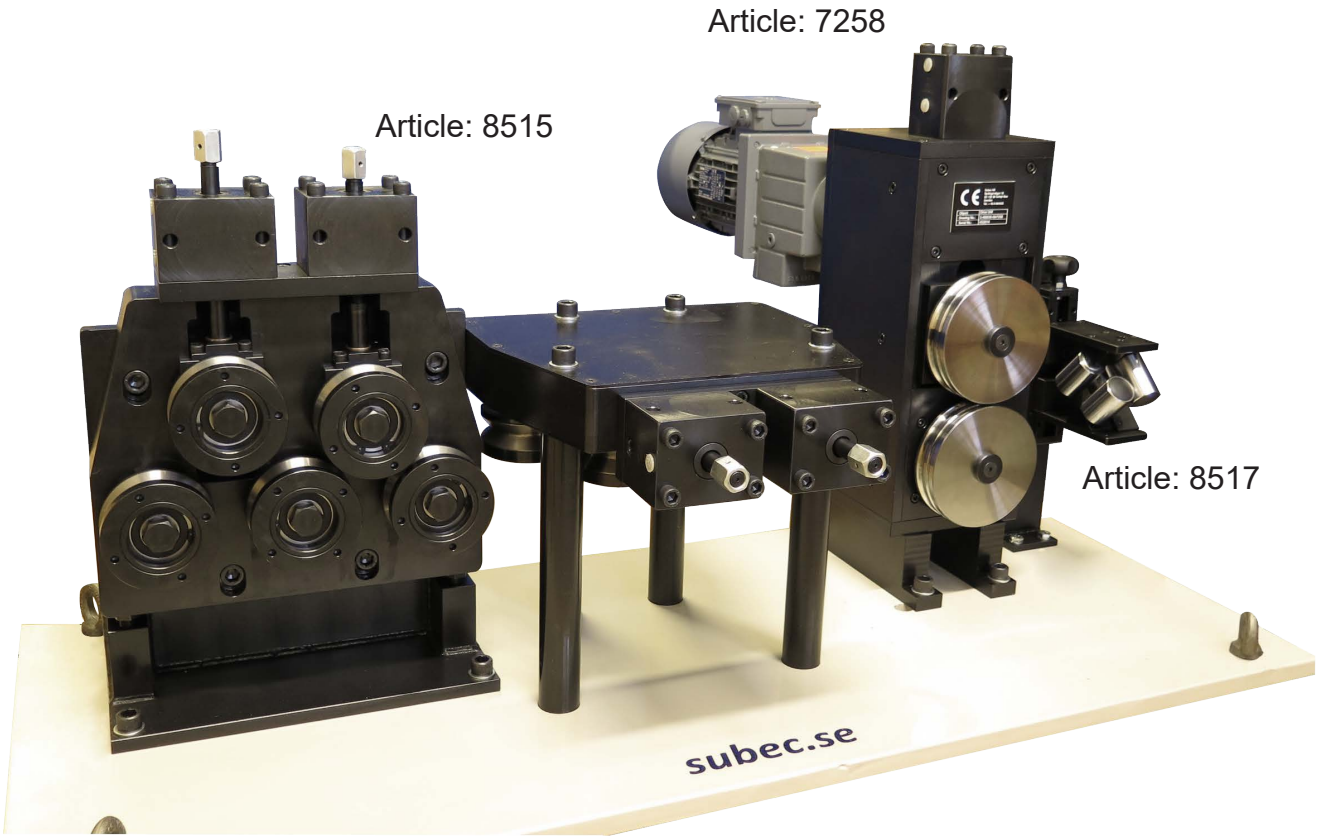

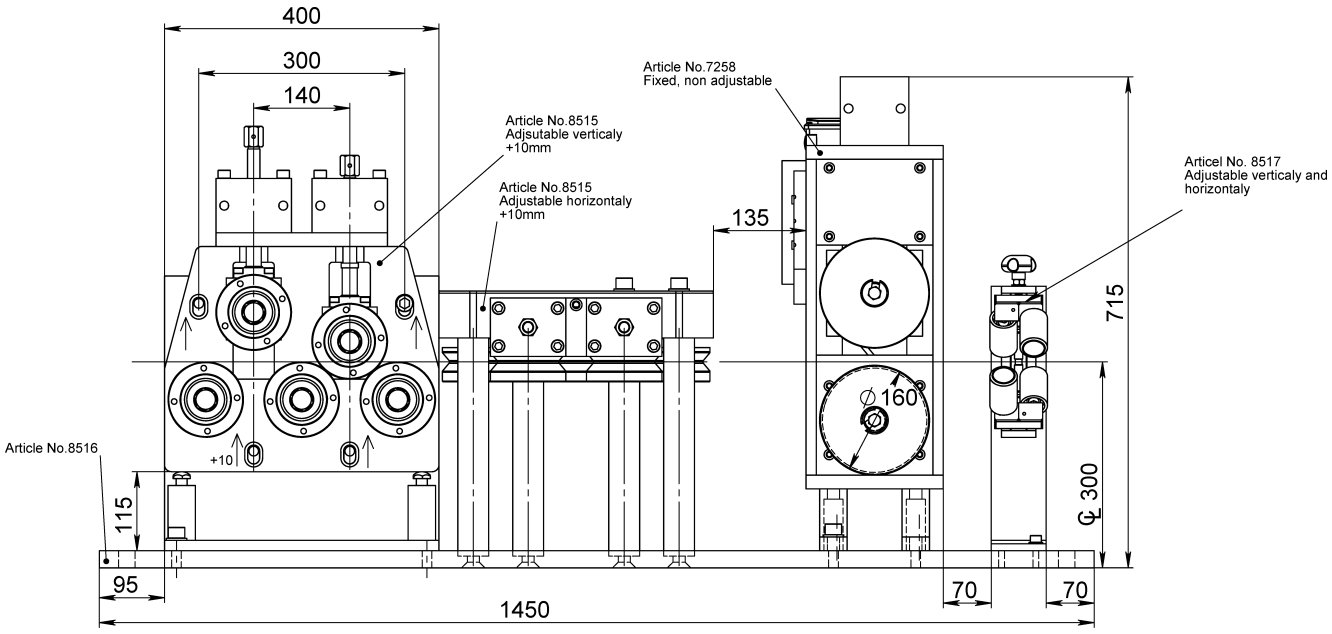

Drawing No. 3-400630-00

Subec AB **Hesselmans Torg 5** **SE- 131 54 Nacka** **Sweden** **Phone: +46-8-88 46 33** **Email: info@subec.se** **Web: www.subec.se**

Copyright © 2026 Subec

DOUBLE DRIVE AND STRAIGHTENING SYSTEM A-160-D

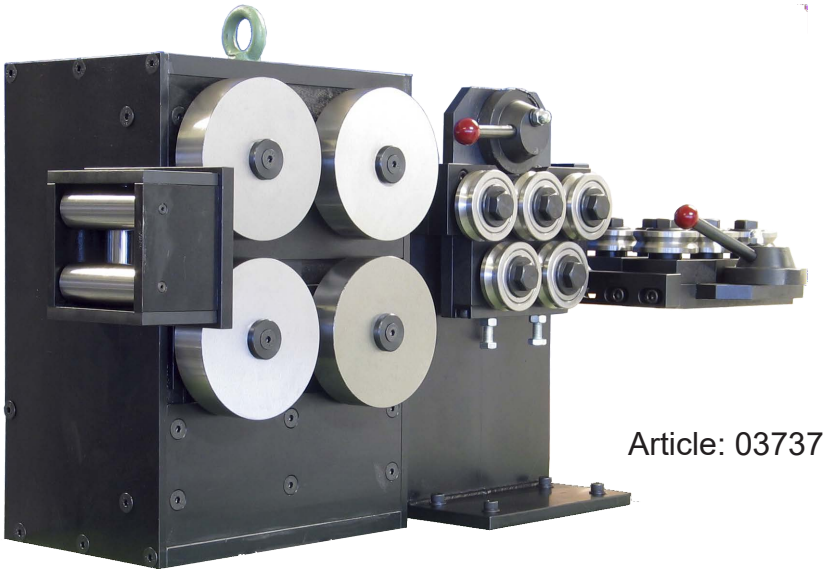

Article: 03737

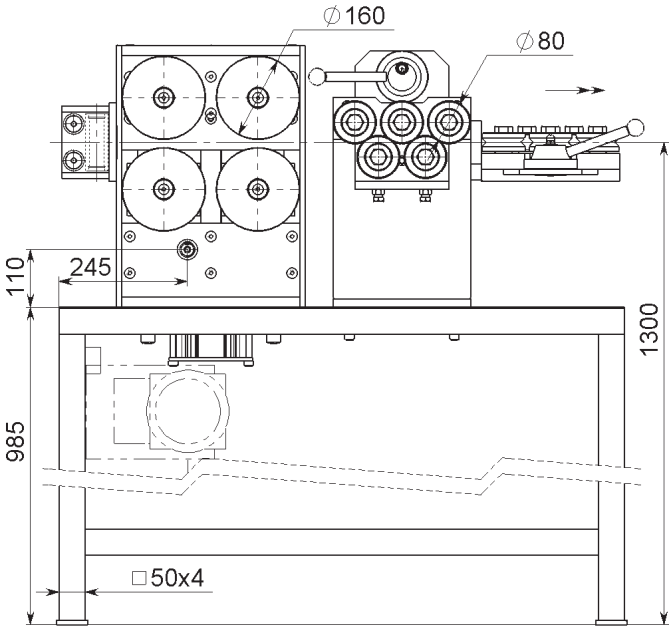

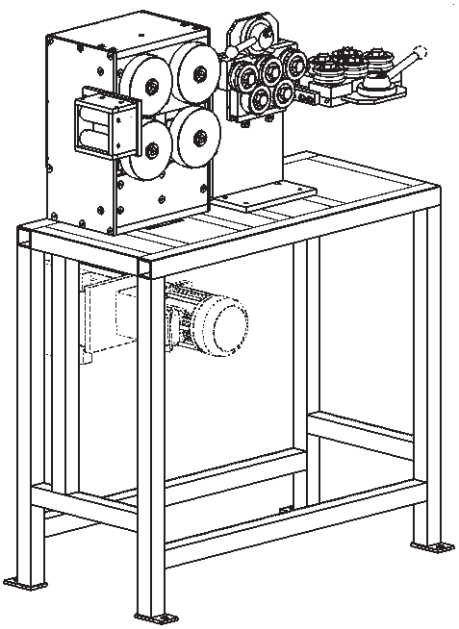

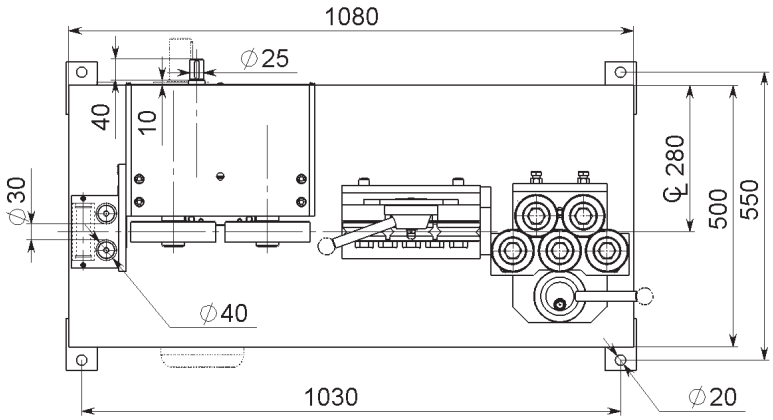

Drawing No. 3-400691-00

Subec AB **Hesselmans Torg 5** **SE- 131 54 Nacka** **Sweden** **Phone: +46-8-88 46 33** **Email: info@subec.se** **Web: www.subec.se**

Copyright © 2026 Subec

DRIVE AND STRAIGHTENING SYSTEM

Example of application: For Rebar Ø4-15mm or Ø8-18mm

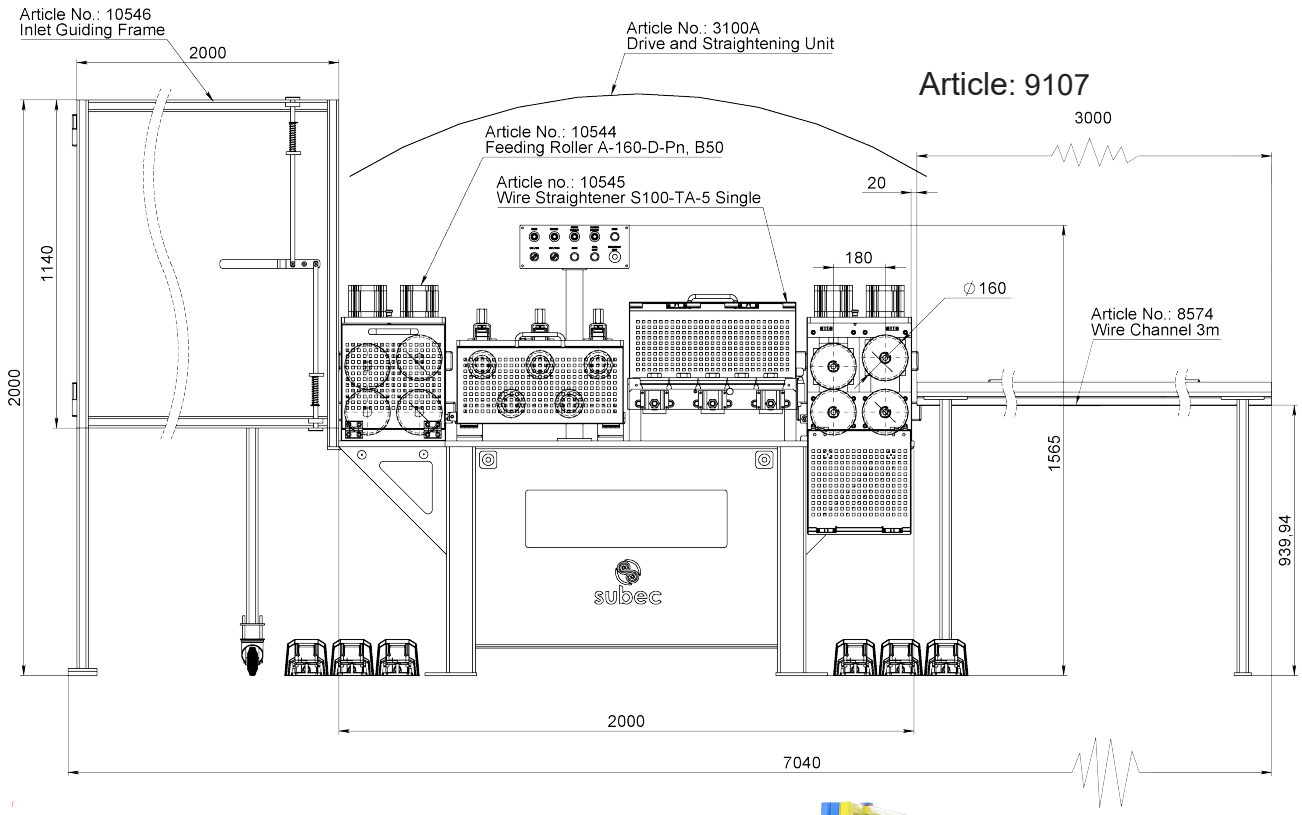

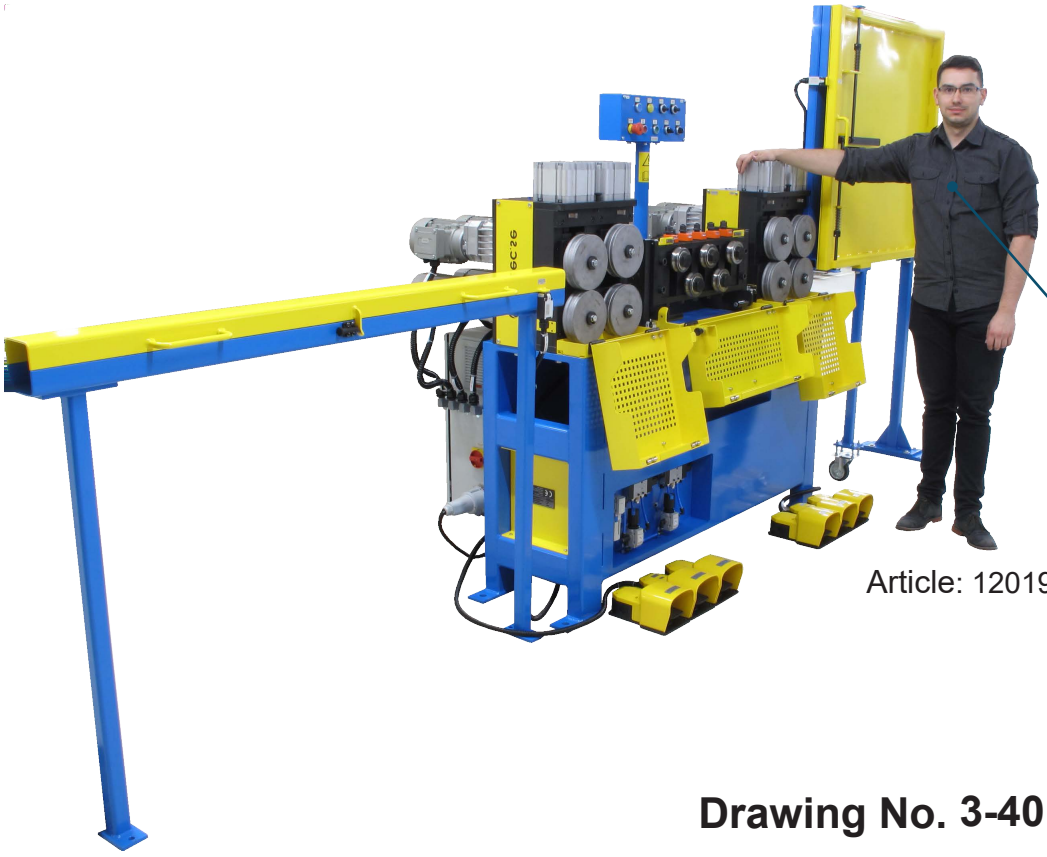

Article: 12019

Drawing No. 3-401147-00

Subec AB **Hesselmans Torg 5** **SE- 131 54 Nacka** **Sweden** **Phone: +46-8-88 46 33** **Email: info@subec.se** **Web: www.subec.se**

Copyright © 2026 Subec

DRIVEN STRAIGHTENER FOR TAPE
S60-HW-7

Example of application: Tape

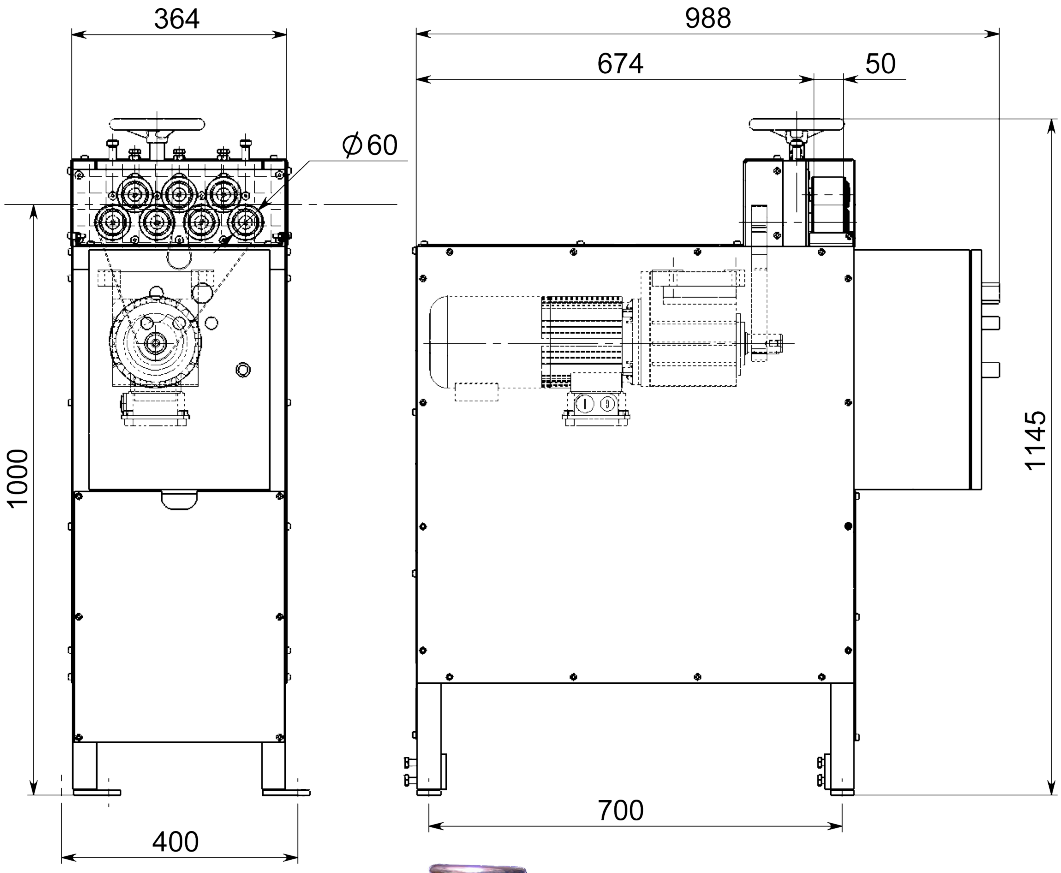



Article: 03169

Drawing No. 3-400642-00

Subec AB **Hesselmans Torg 5** **SE- 131 54 Nacka** **Sweden** **Phone: +46-8-88 46 33** **Email: info@subec.se** **Web: www.subec.se**

Copyright © 2026 Subec

CATERPILLAR

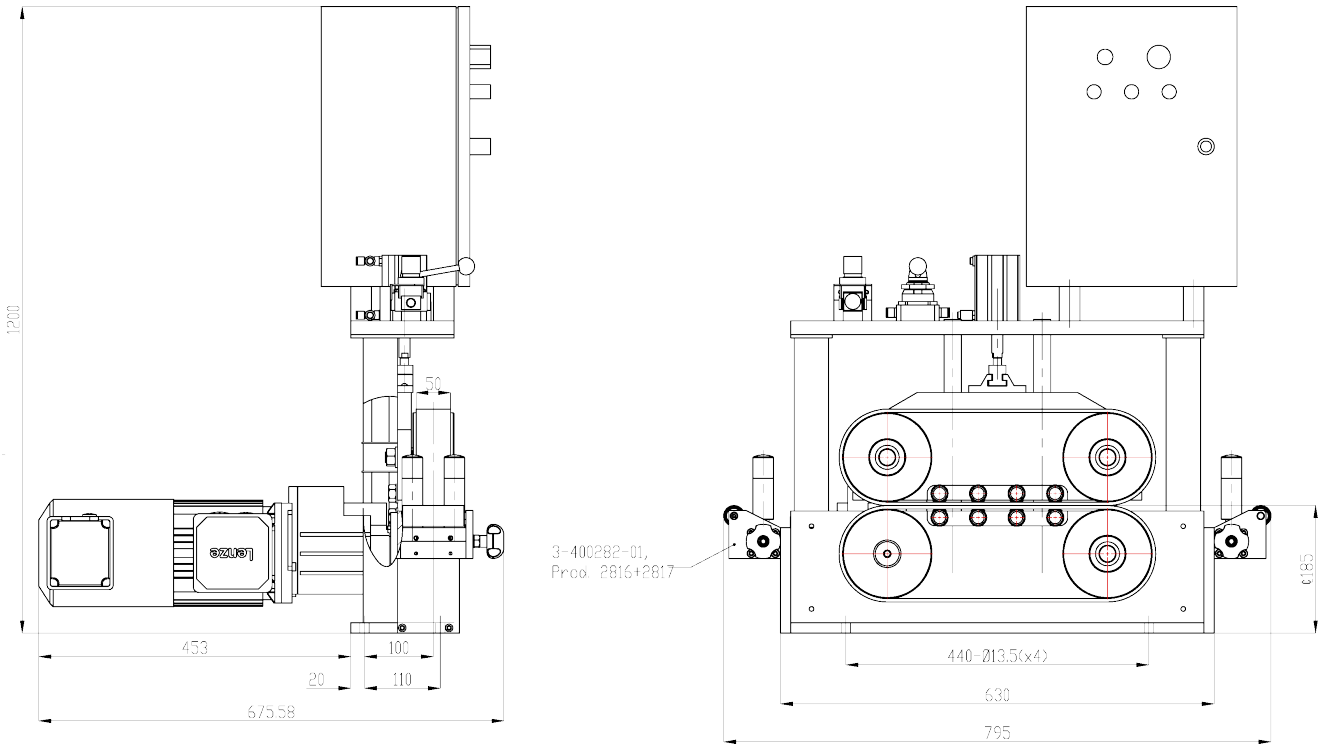

Article: 03565

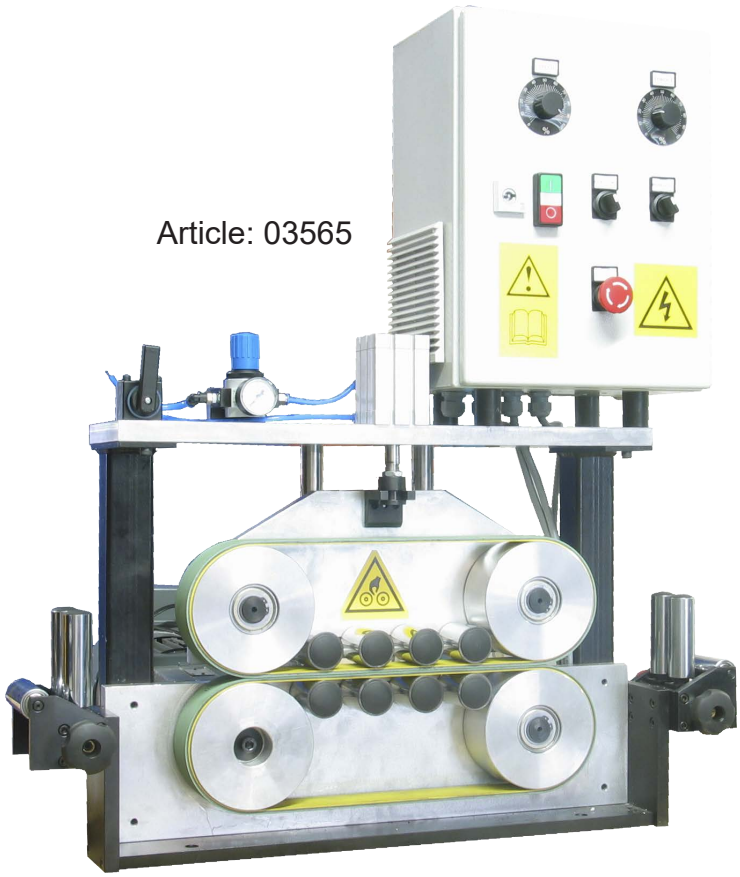

Drawing No. 3-400667-03

Subec AB **Hesselmans Torg 5** **SE- 131 54 Nacka** **Sweden** **Phone: +46-8-88 46 33** **Email: info@subec.se** **Web: www.subec.se**

Copyright © 2026 Subec

CATERPILLAR

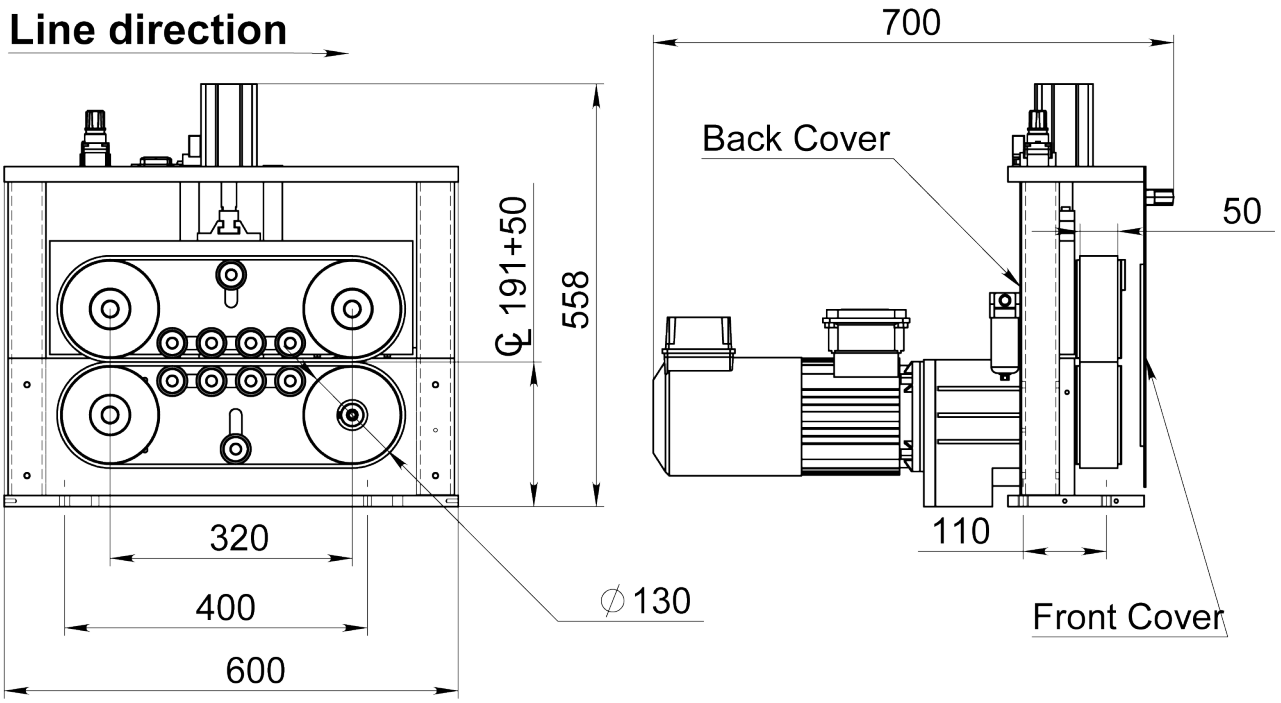

Article: 06007
Weight: 76kg

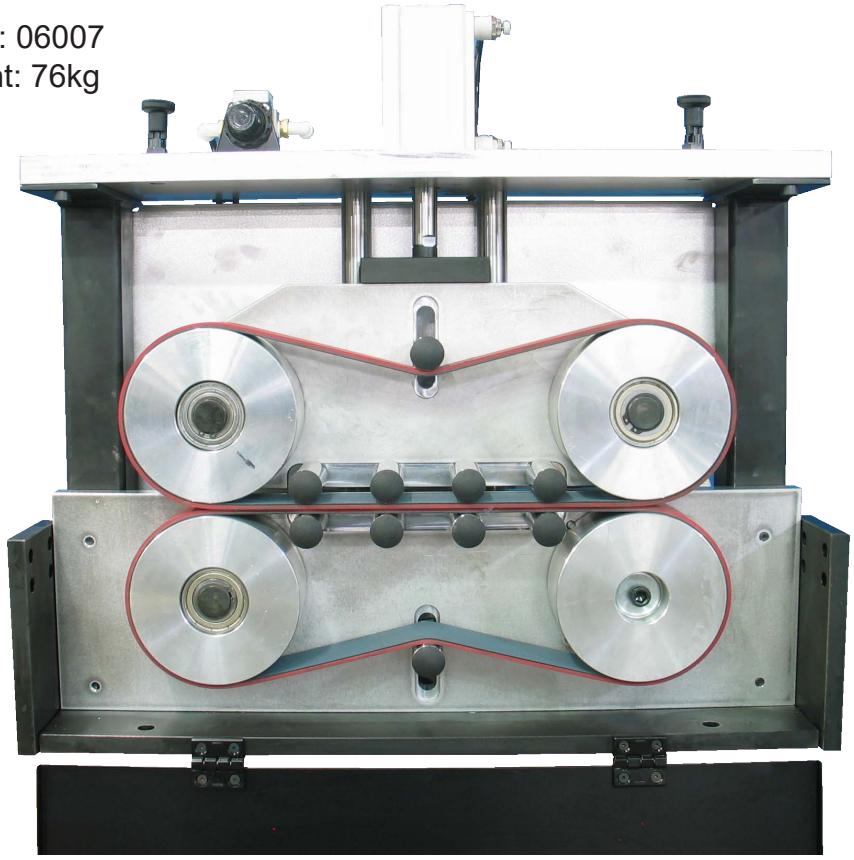

Drawing No. 3-400667-00

Subec AB
Hesselmans Torg 5
SE- 131 54 Nacka
Sweden
Phone: +46-8-88 46 33
Email: info@subec.se
Web: www.subec.se

Copyright © 2026 Subec

CATERPILLAR D130 CC700

Max Product Ø: 50mm, Pulling Force: 500N, Speed: 0-60m/min





Article: 09537
Weight: 130kg

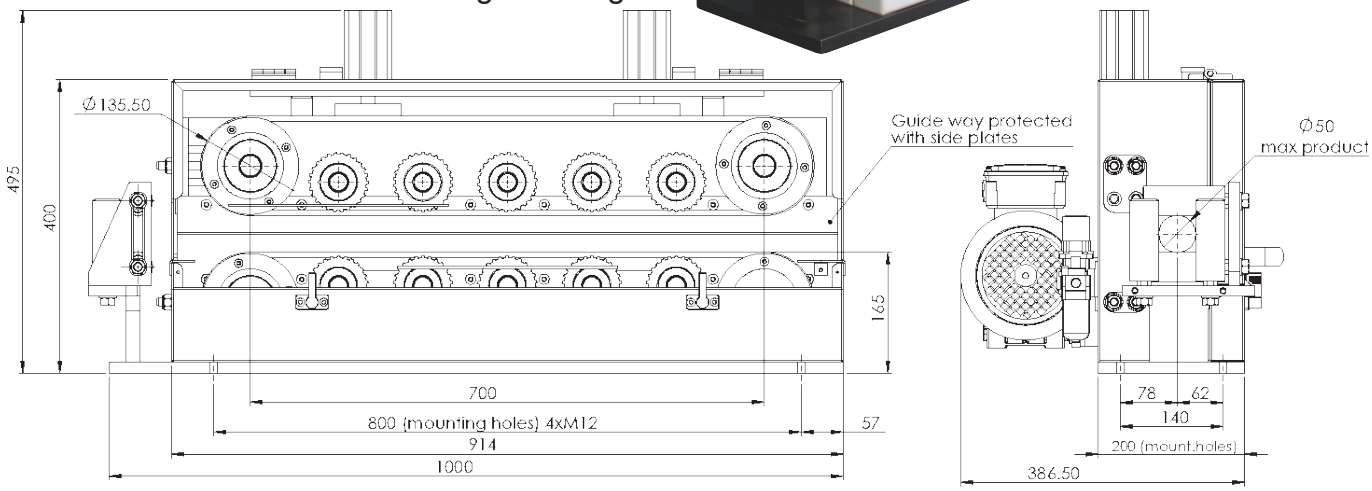

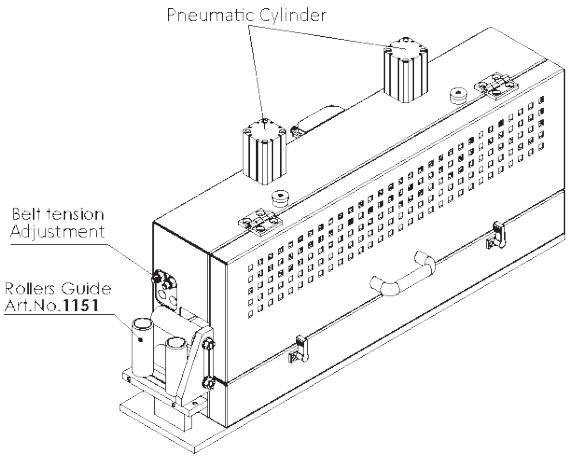

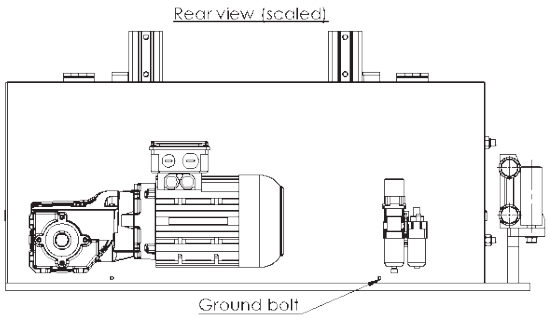

Drawing No. 3-400667-04

Subec AB **Hesselmans Torg 5** **SE- 131 54 Nacka** **Sweden** **Phone: +46-8-88 46 33** **Email: info@subec.se** **Web: www.subec.se**

Copyright © 2026 Subec

CATERPILLAR, CL1000

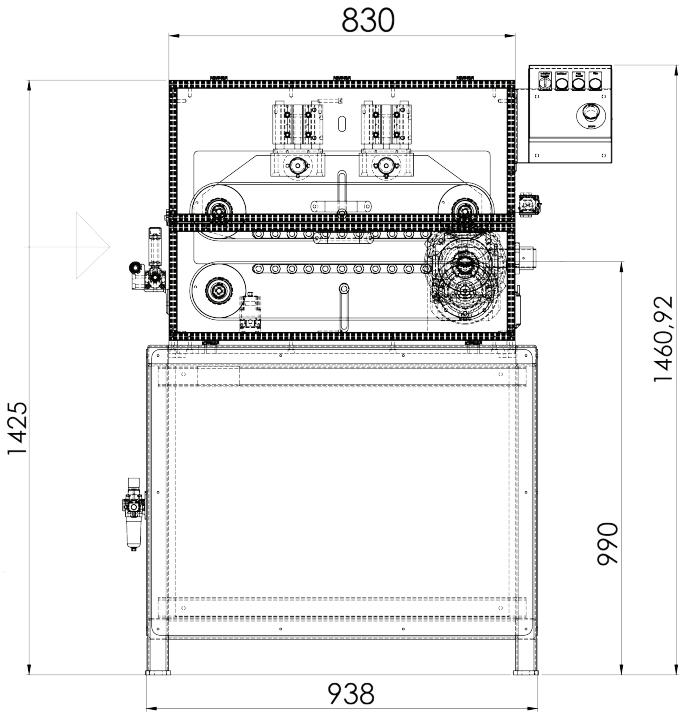

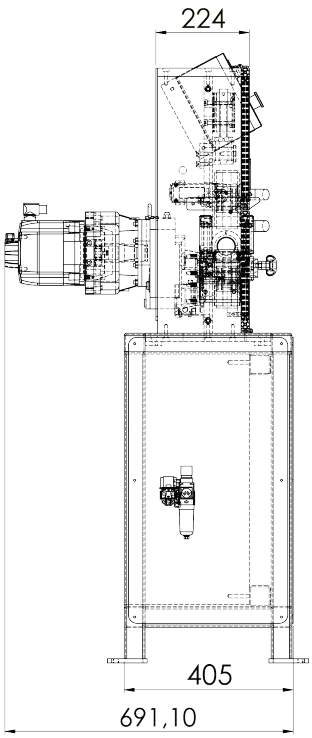

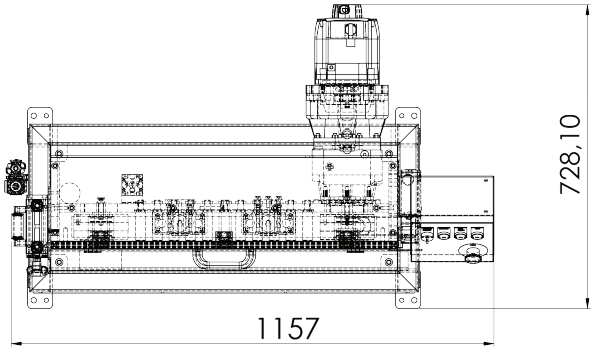

Article: 14022



Drawing No. 3-401386-00

Subec AB **Hesselmans Torg 5** **SE- 131 54 Nacka** **Sweden** **Phone: +46-8-88 46 33** **Email: info@subec.se** **Web: www.subec.se**

Copyright © 2026 Subec

SPARE PARTS FOR CATERPILLARS

Example: Roller Blocks of various designs

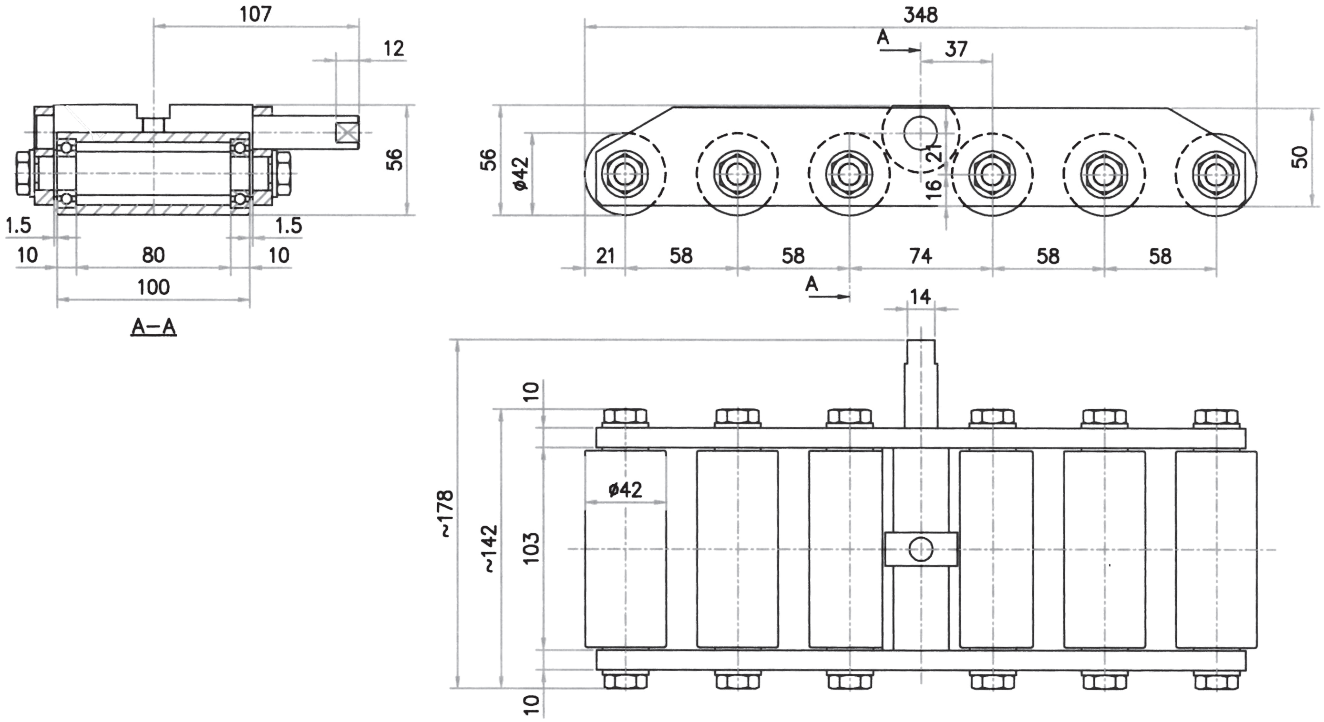

Article: 01576



Option:



Drawing No. 3-400476-00

Subec AB **Hesselmans Torg 5** **SE- 131 54 Nacka** **Sweden** **Phone: +46-8-88 46 33** **Email: info@subec.se** **Web: www.subec.se**

Copyright © 2026 Subec

ELECTRICALLY CONTROLLED BRAKE

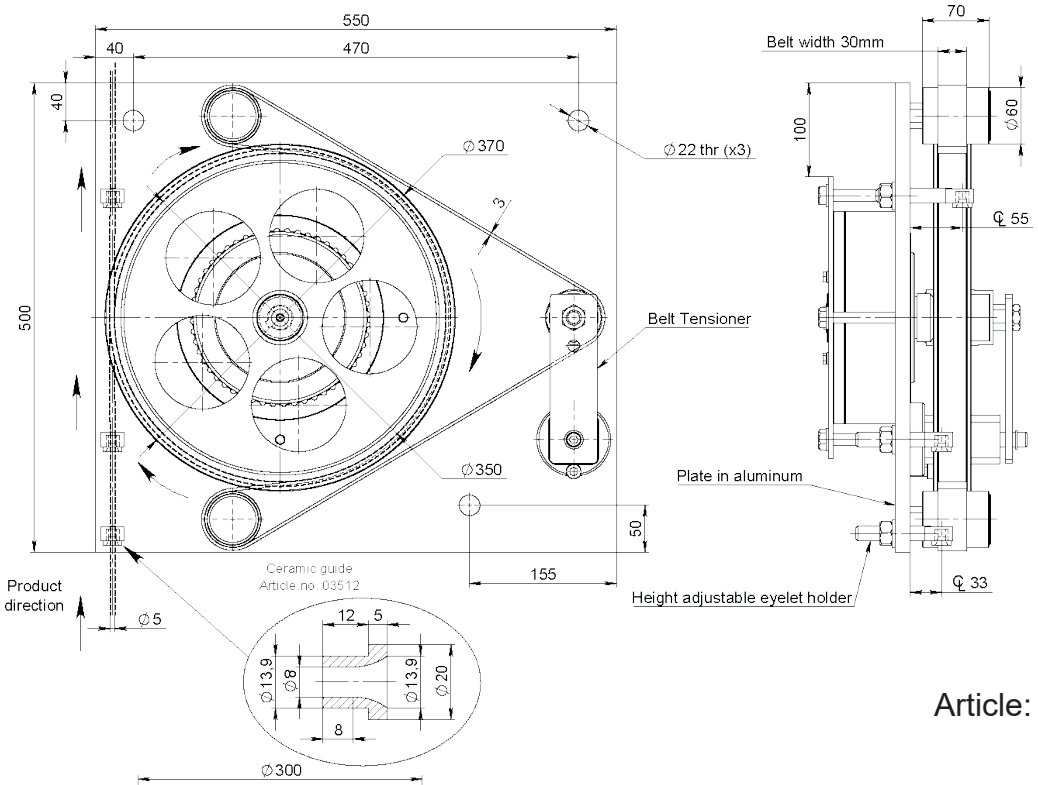

Article: 06281

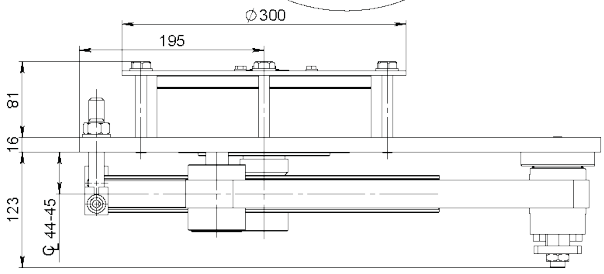

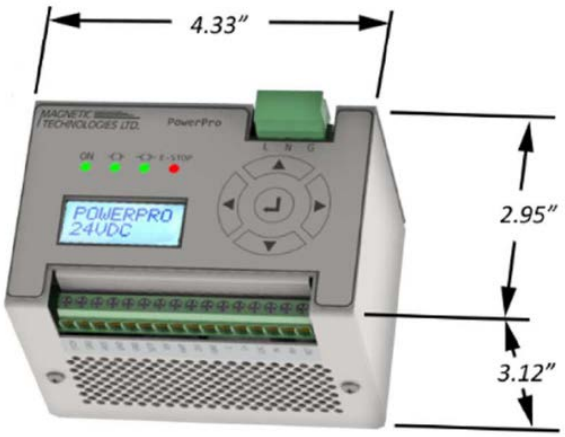

MPP24-I



Drawing No. 3-400845-00

Subec AB **Hesselmans Torg 5** **SE- 131 54 Nacka** **Sweden** **Phone: +46-8-88 46 33** **Email: info@subec.se** **Web: www.subec.se**

Copyright © 2026 Subec

ELECTRICALLY CONTROLLED HYSTERESIS BRAKE

For Wire Pay-off applications

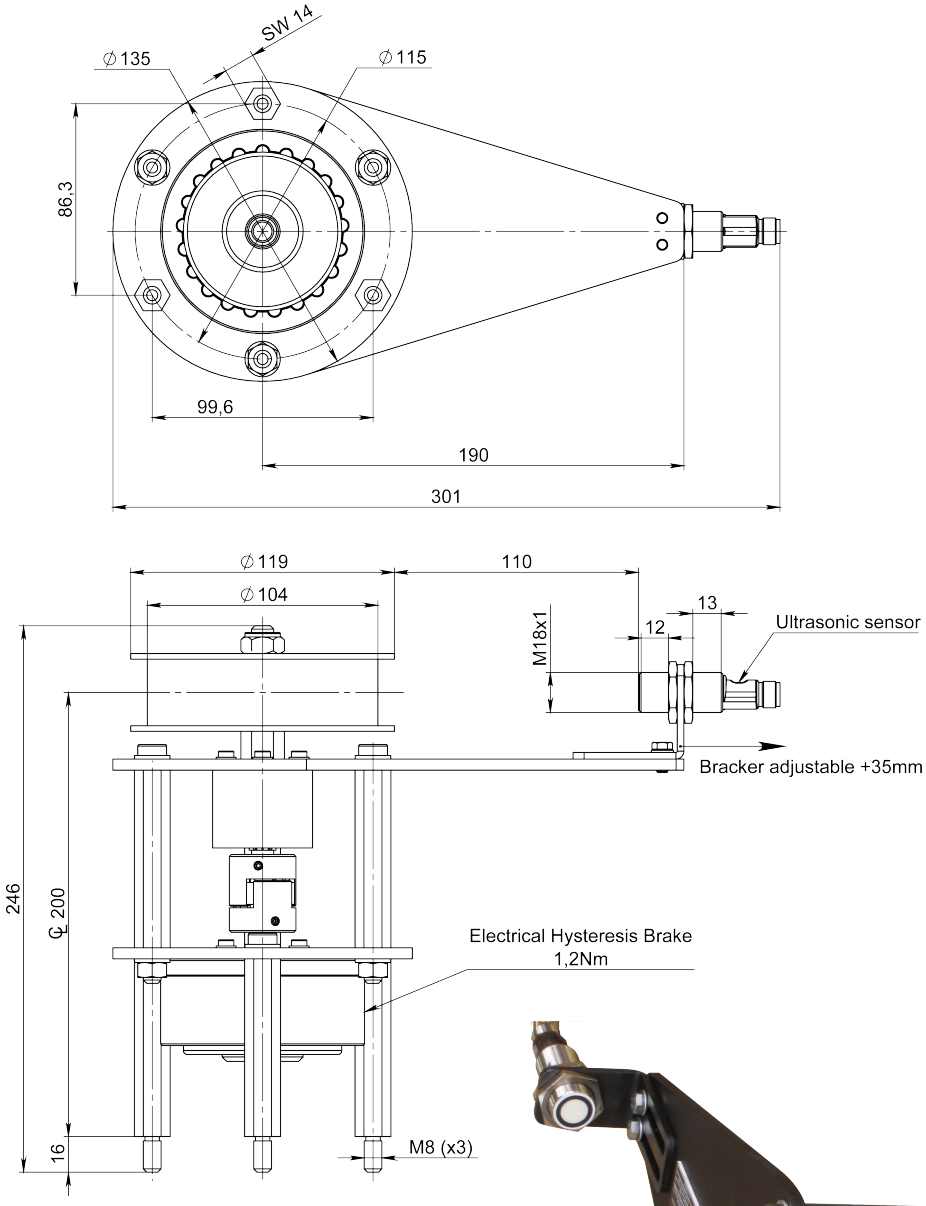



Article: 10325

Drawing No. 3-401239-00

Subec AB **Hesselmans Torg 5** **SE- 131 54 Nacka** **Sweden** **Phone: +46-8-88 46 33** **Email: info@subec.se** **Web: www.subec.se**

Copyright © 2026 Subec

HYSTERESIS BRAKE

For Flyer Pay-offs and other applications

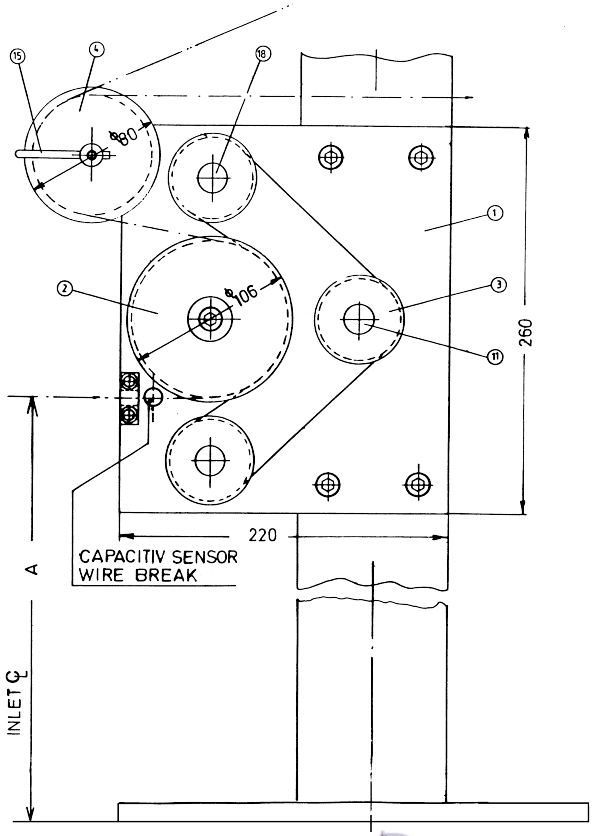

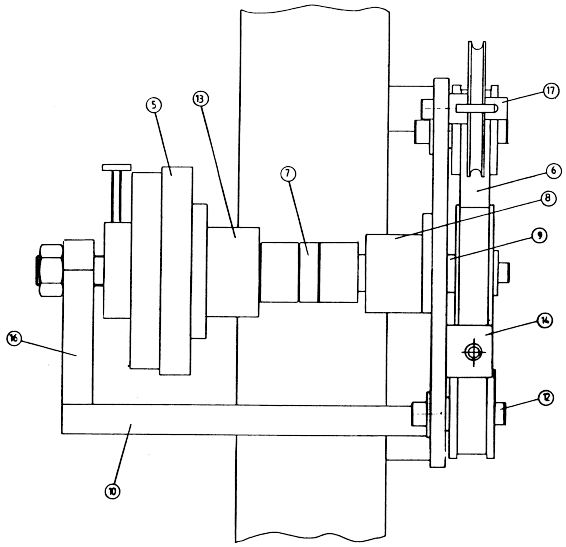



Article: 00598

Drawing No. 3-400193-00

Subec AB **Hesselmans Torg 5** **SE- 131 54 Nacka** **Sweden** **Phone: +46-8-88 46 33** **Email: info@subec.se** **Web: www.subec.se**

Copyright © 2026 Subec

ELECTRICALLY CONTROLLED HYSTERESIS BRAKE

For Flyer Pay-offs and other applications

Max brake power: 100N

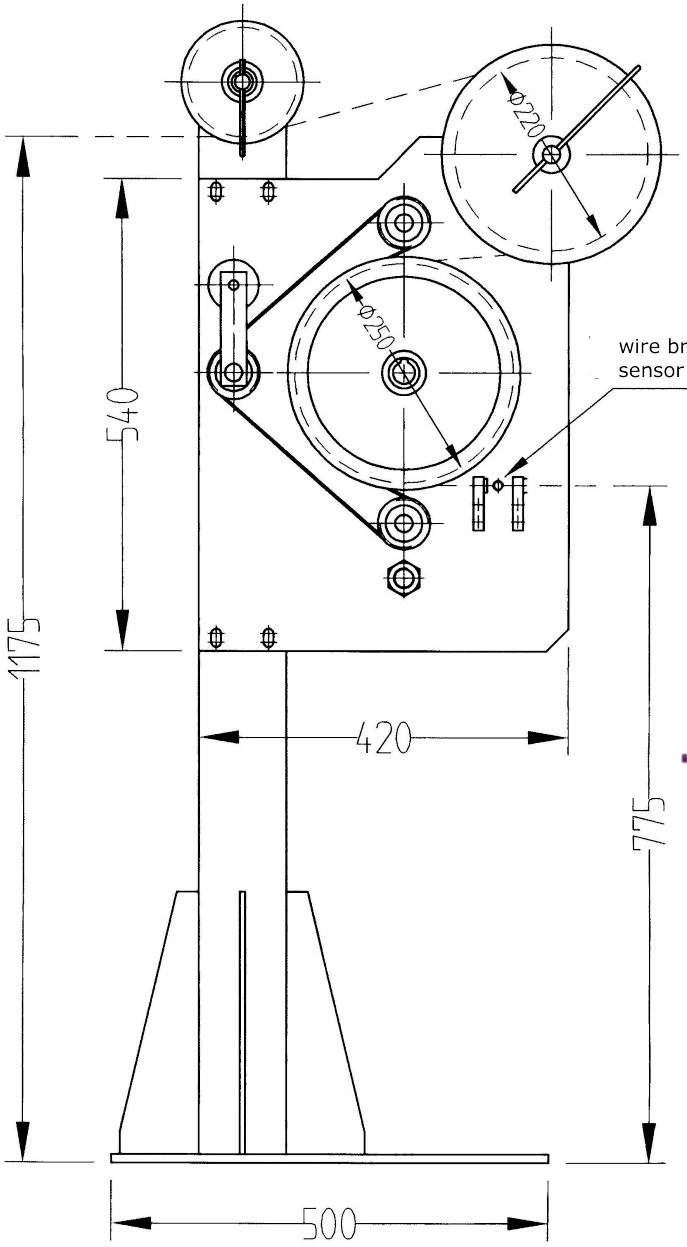

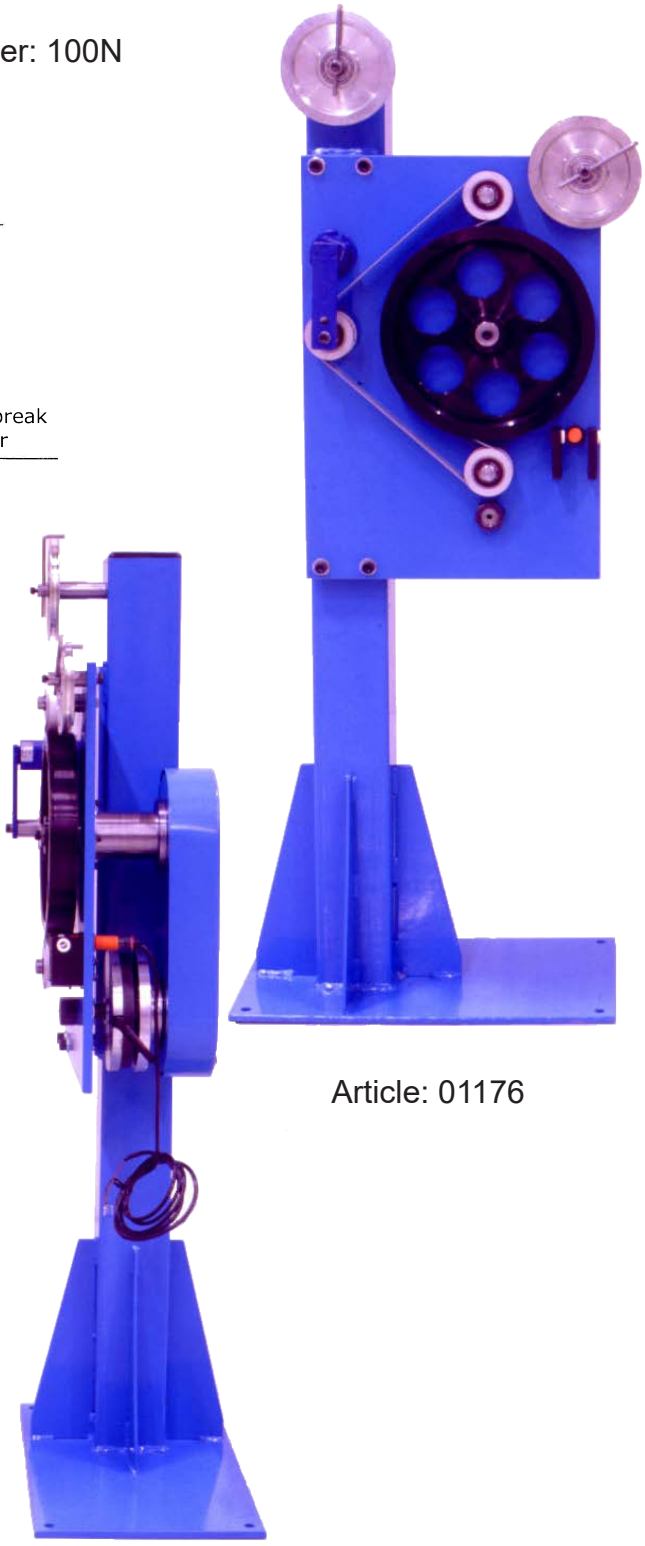

Article: 01176

Drawing No. 3-400372-00

Subec AB **Hesselmans Torg 5** **SE- 131 54 Nacka** **Sweden** **Phone: +46-8-88 46 33** **Email: info@subec.se** **Web: www.subec.se**

Copyright © 2026 Subec

ELECTRICALLY CONTROLLED HYSTERESIS BRAKE



Article: 07119

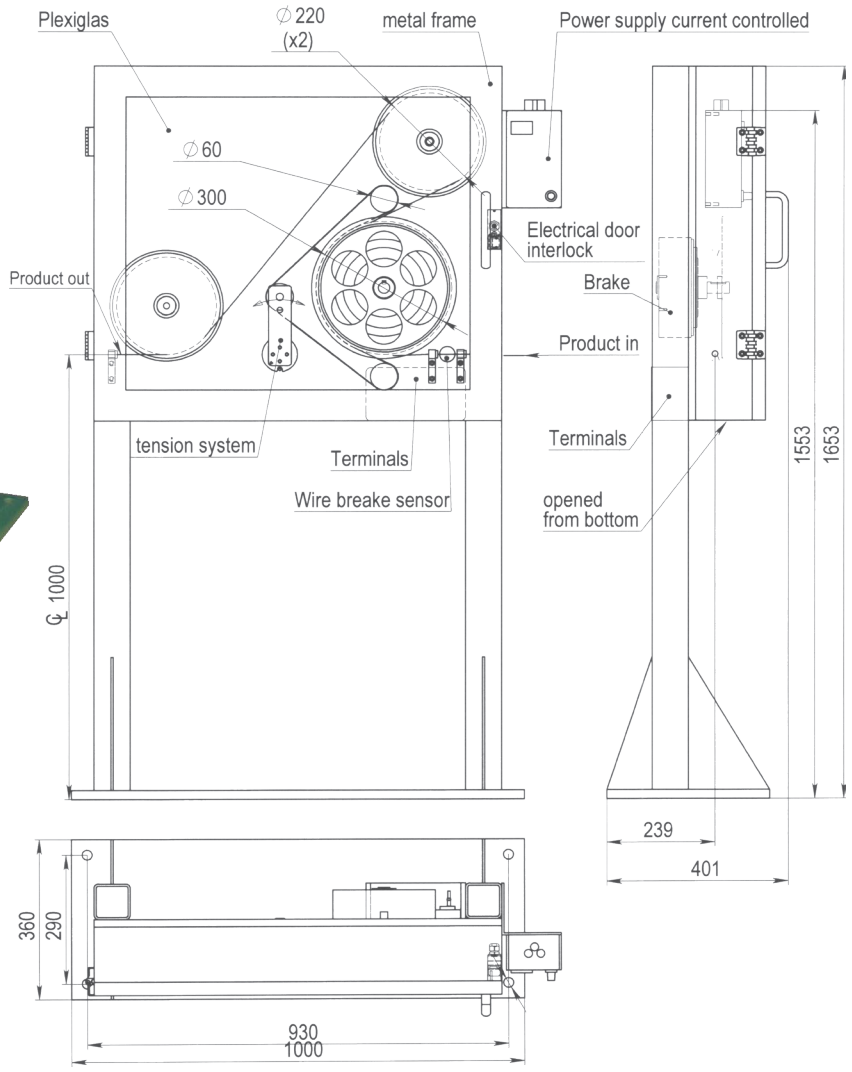

Drawing No. 3-400911-00

Subec AB **Hesselmans Torg 5** **SE- 131 54 Nacka** **Sweden** **Phone: +46-8-88 46 33** **Email: info@subec.se** **Web: www.subec.se**

Copyright © 2026 Subec

ELECTRICALLY CONTROLLED HYSTERESIS BRAKE

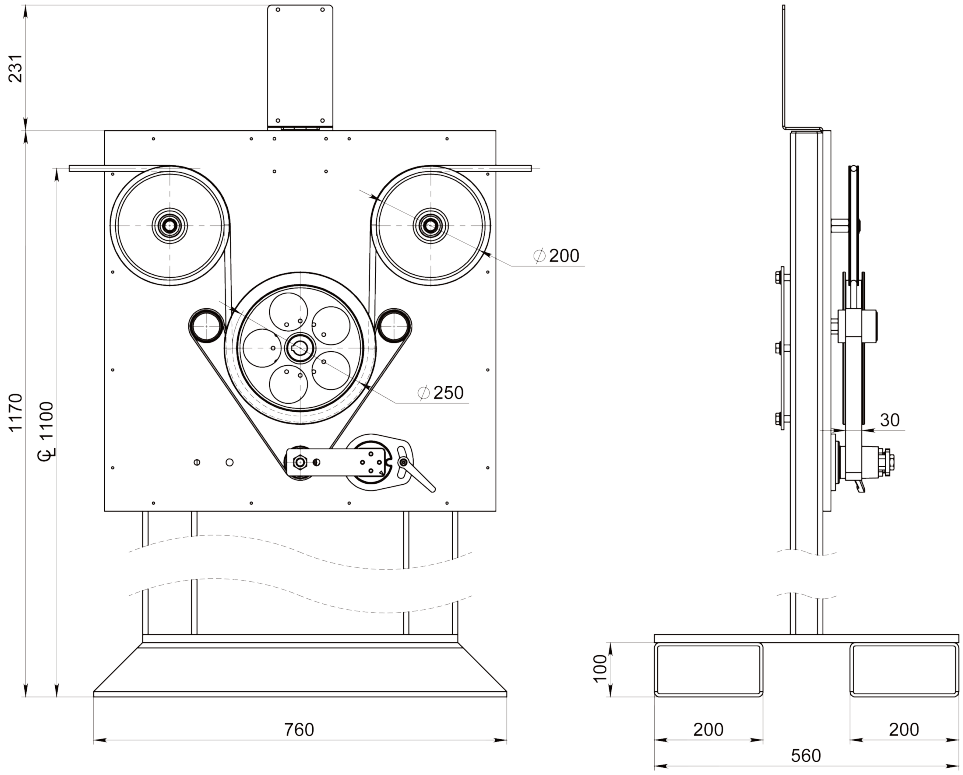

Article: 14290

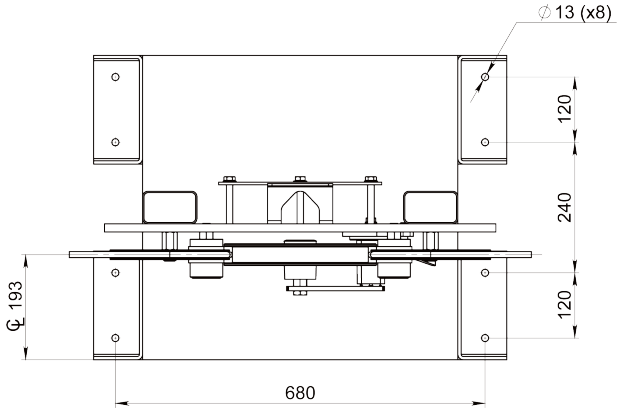

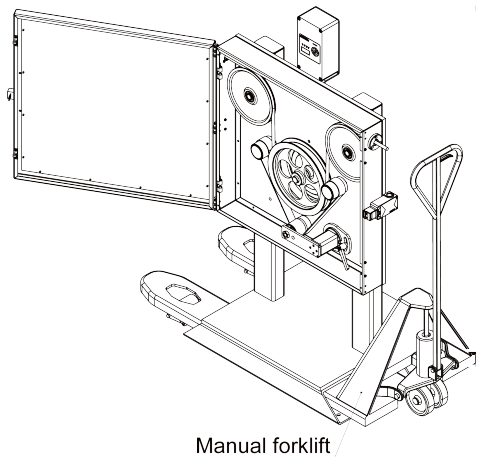

Manual forklift



Drawing No. 3-400645-00

Subec AB **Hesselmans Torg 5** **SE- 131 54 Nacka** **Sweden** **Phone: +46-8-88 46 33** **Email: info@subec.se** **Web: www.subec.se**

Copyright © 2026 Subec

MULTIPASS ELECTRICALLY CONTROLLED HYSTERESIS BRAKE

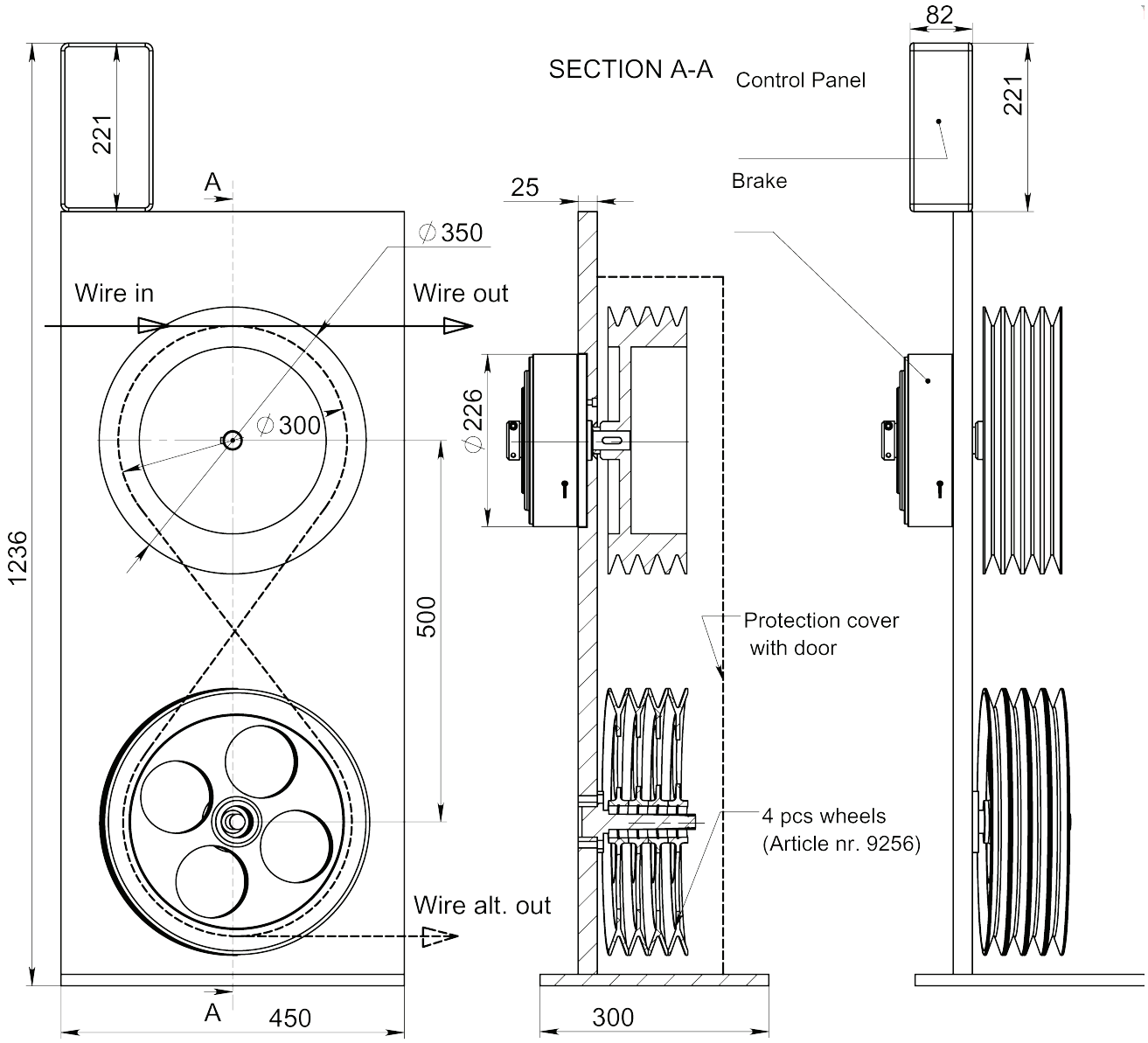

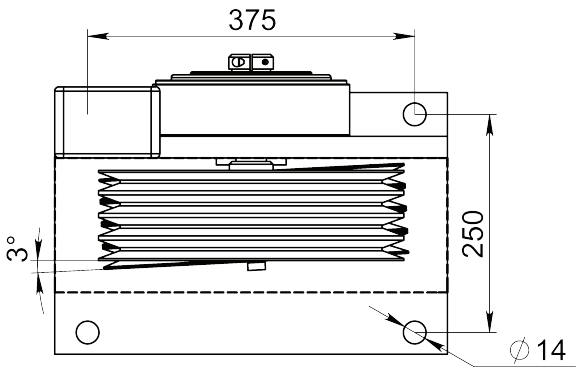

Article: 10532

Drawing No. 3-401241-00

Subec AB **Hesselmans Torg 5** **SE- 131 54 Nacka** **Sweden** **Phone: +46-8-88 46 33** **Email: info@subec.se** **Web: www.subec.se**

Copyright © 2026 Subec

HYSTERESIS BRAKE

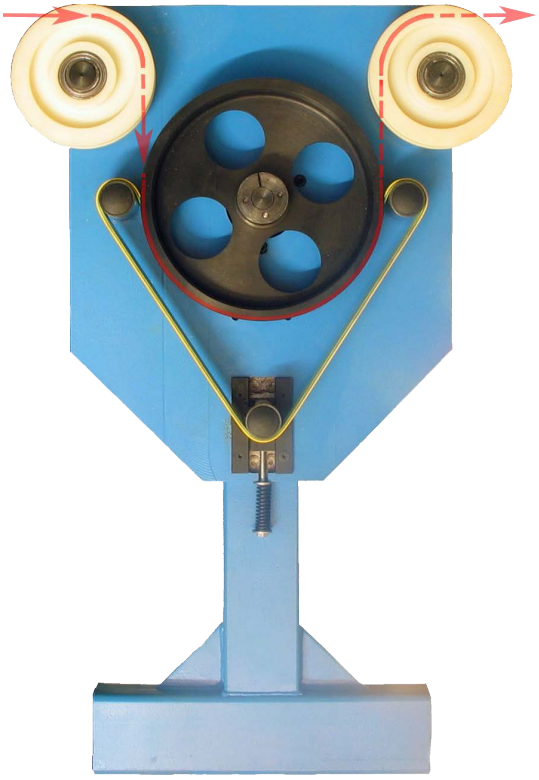

Article: 03260



Example for application

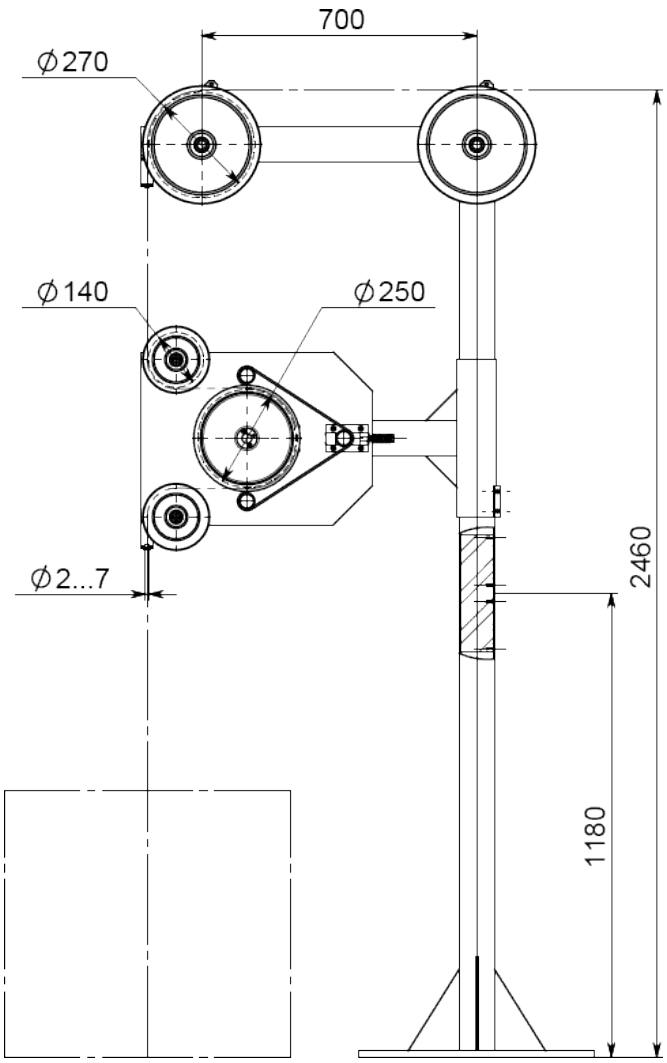

Drawing No. 3-400645-00

Subec AB
Hesselmans Torg 5
SE- 131 54 Nacka
Sweden
Phone: +46-8-88 46 33
Email: info@subec.se
Web: www.subec.se

Copyright © 2026 Subec

HYSTERESIS BRAKE

Max break force of 12N at speed 600 m/min
Other break forces on request

Article: 04590

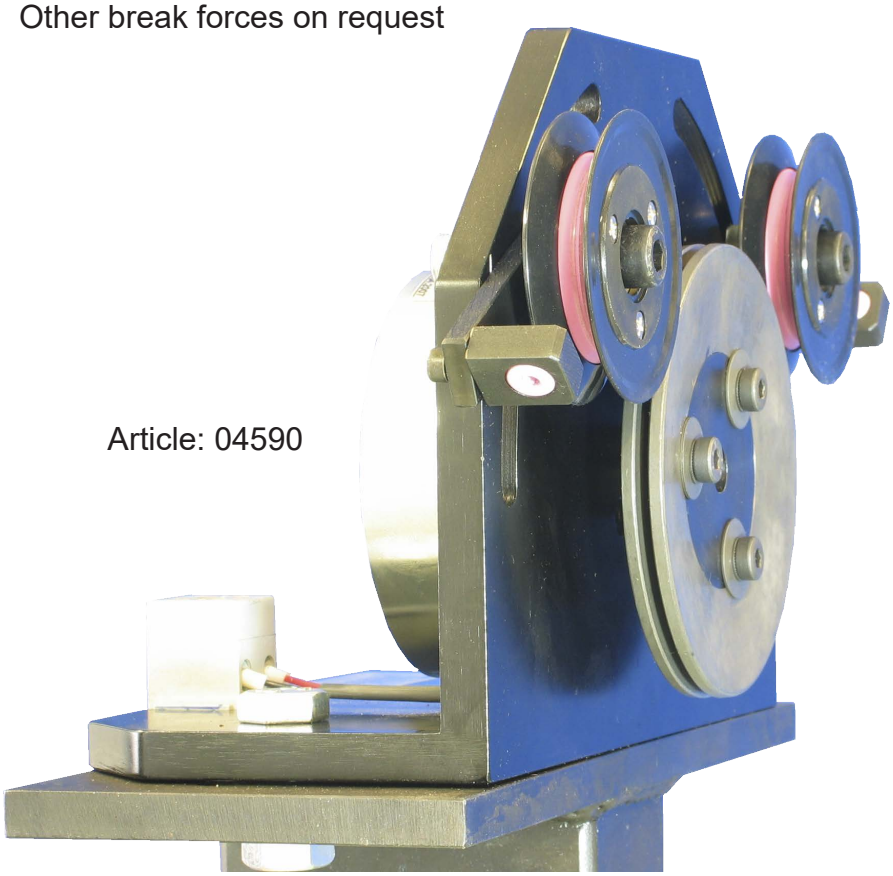

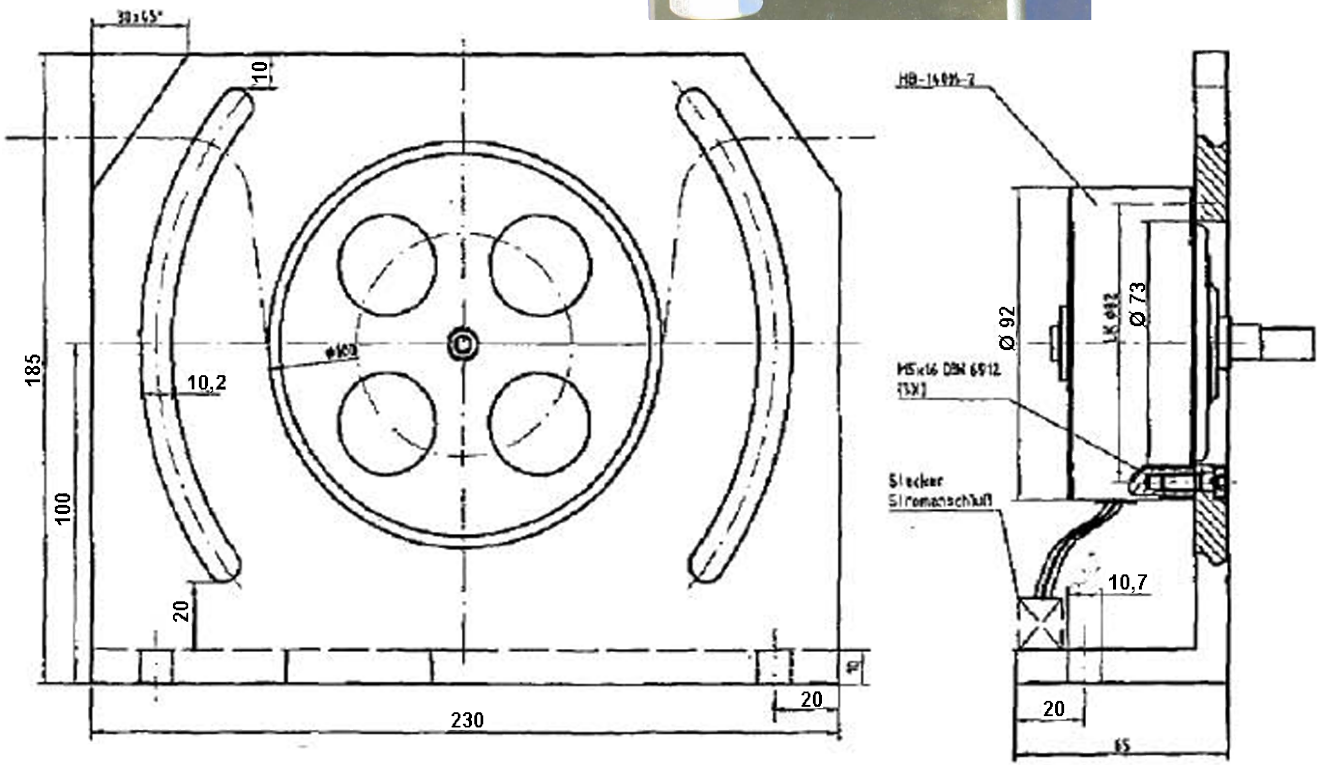

Subec AB **Hesselmans Torg 5** **SE- 131 54 Nacka** **Sweden** **Phone: +46-8-88 46 33** **Email: info@subec.se** **Web: www.subec.se**

Copyright © 2026 Subec

HYSTERESIS BRAKE

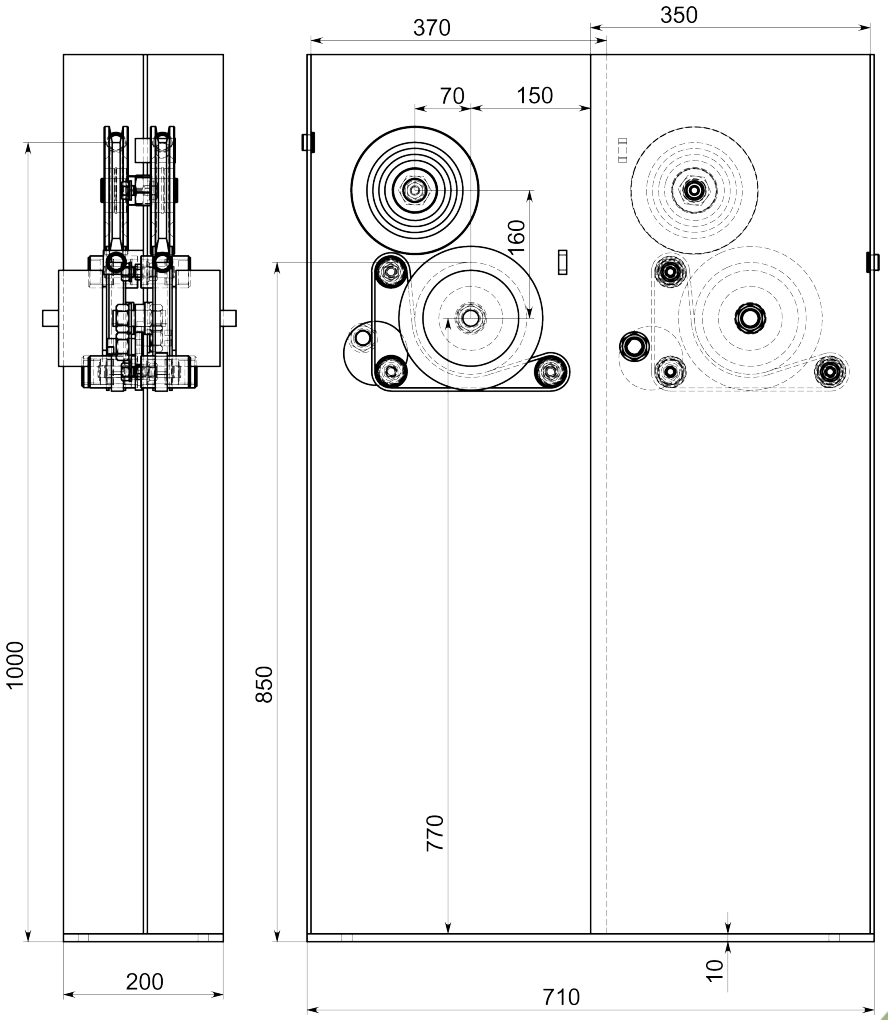



Line direction left to right



Article: 04619

Drawing No. 3-400744-00

Subec AB **Hesselmans Torg 5** **SE- 131 54 Nacka** **Sweden** **Phone: +46-8-88 46 33** **Email: info@subec.se** **Web: www.subec.se**

Copyright © 2026 Subec

HYSTERESIS BRAKE

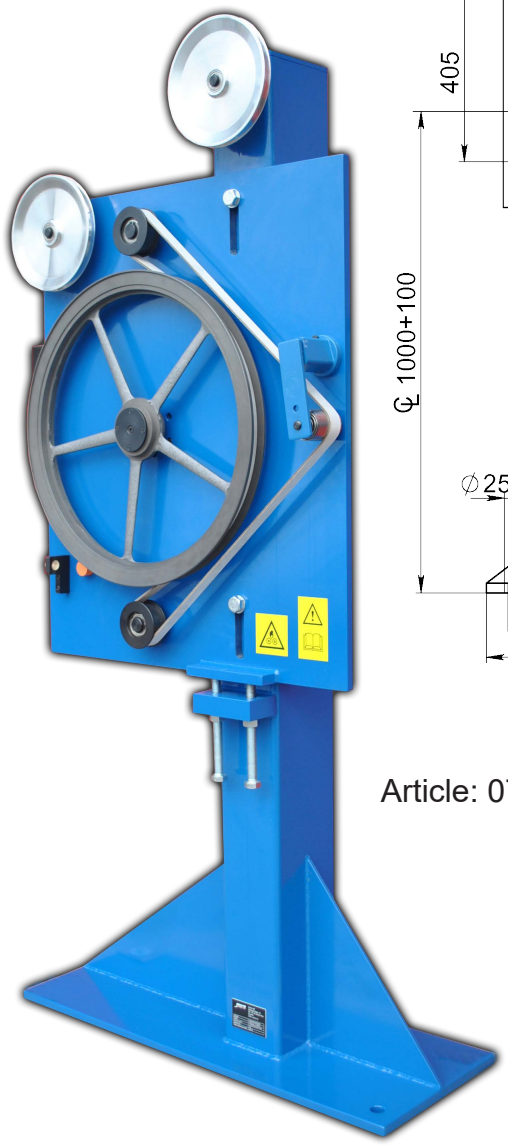

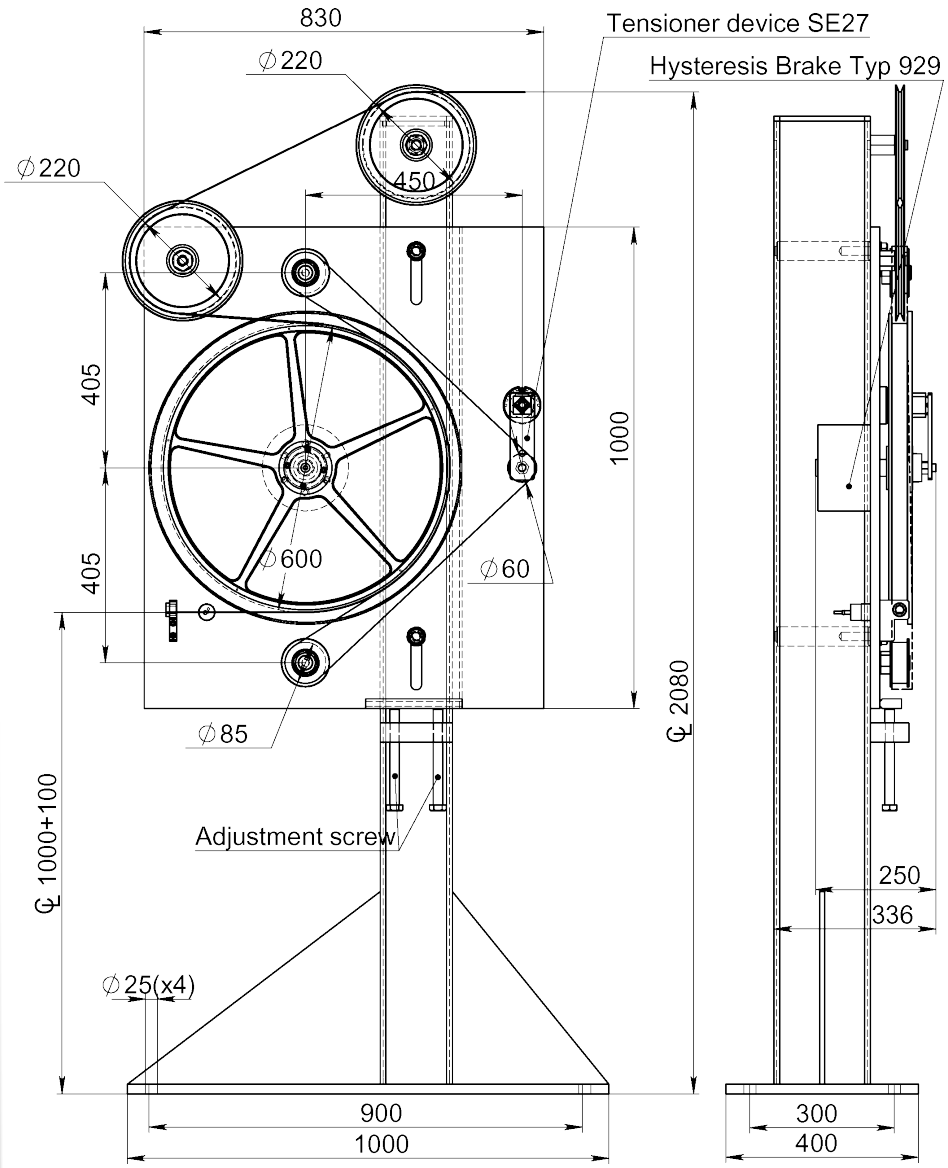

Article: 07709

Drawing No. 3-400193-00

Subec AB **Hesselmans Torg 5** **SE- 131 54 Nacka** **Sweden** **Phone: +46-8-88 46 33** **Email: info@subec.se** **Web: www.subec.se**

Copyright © 2026 Subec

TAPE BRAKE

Product range: 80-280mm

Max break force of 1400N at speed 50m/min
Other break forces on request

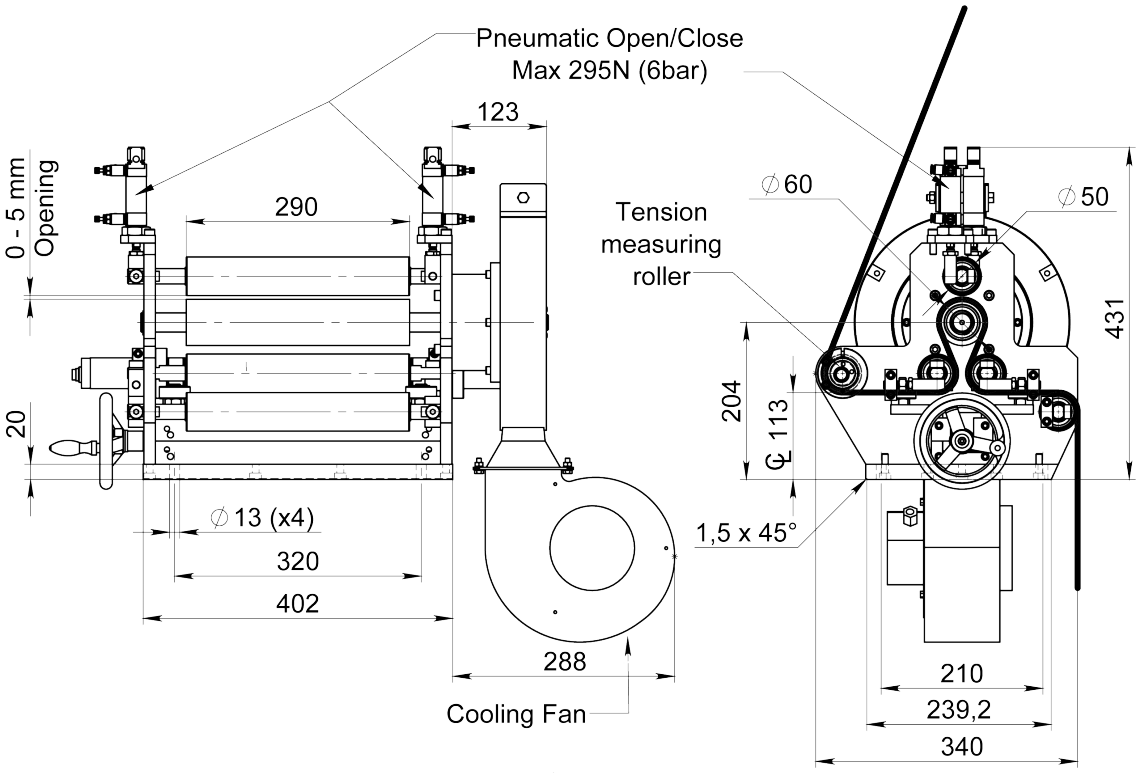

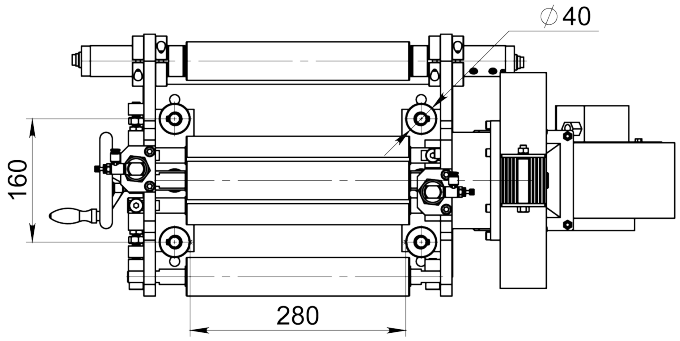

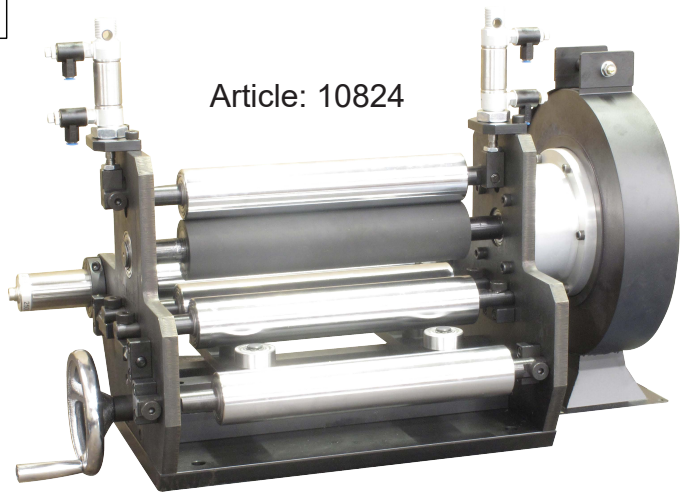

Article: 10824

Drawing No. 3-401260-00

Subec AB **Hesselmans Torg 5** **SE- 131 54 Nacka** **Sweden** **Phone: +46-8-88 46 33** **Email: info@subec.se** **Web: www.subec.se**

Copyright © 2026 Subec

PAY-OFF BRAKE

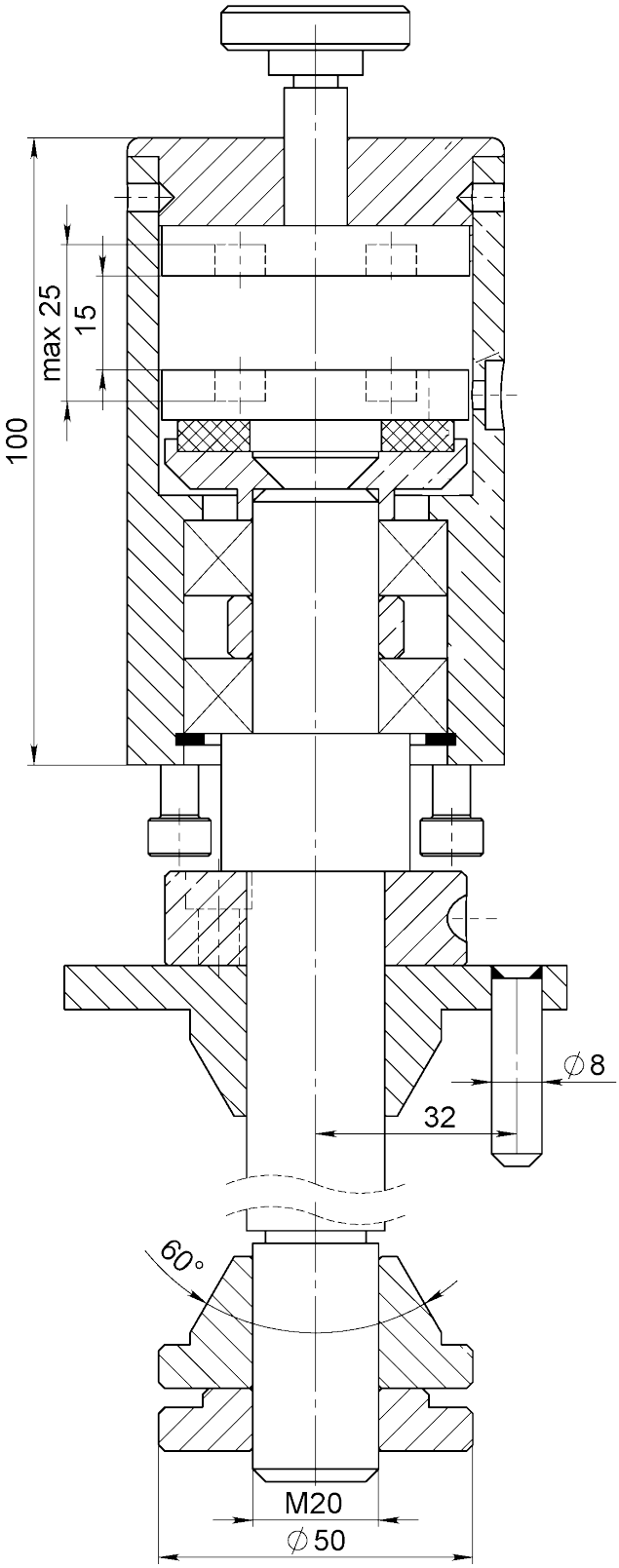



Article: 06445
Weight: 3,28kg

Drawing No. 3-400856-00

Subec AB
Hesselmans Torg 5
SE- 131 54 Nacka
Sweden
Phone: +46-8-88 46 33
Email: info@subec.se
Web: www.subec.se

Copyright © 2026 Subec

PAY-OFF SHAFT BRAKE

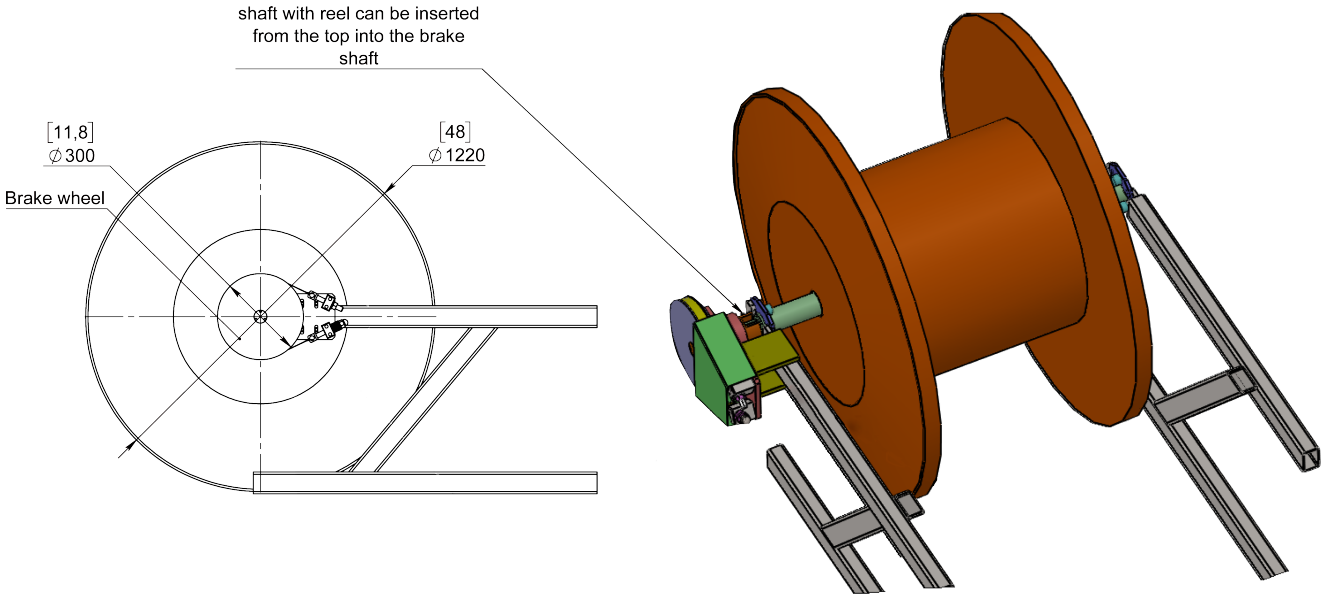

Article: 12678
Weight: 70kg

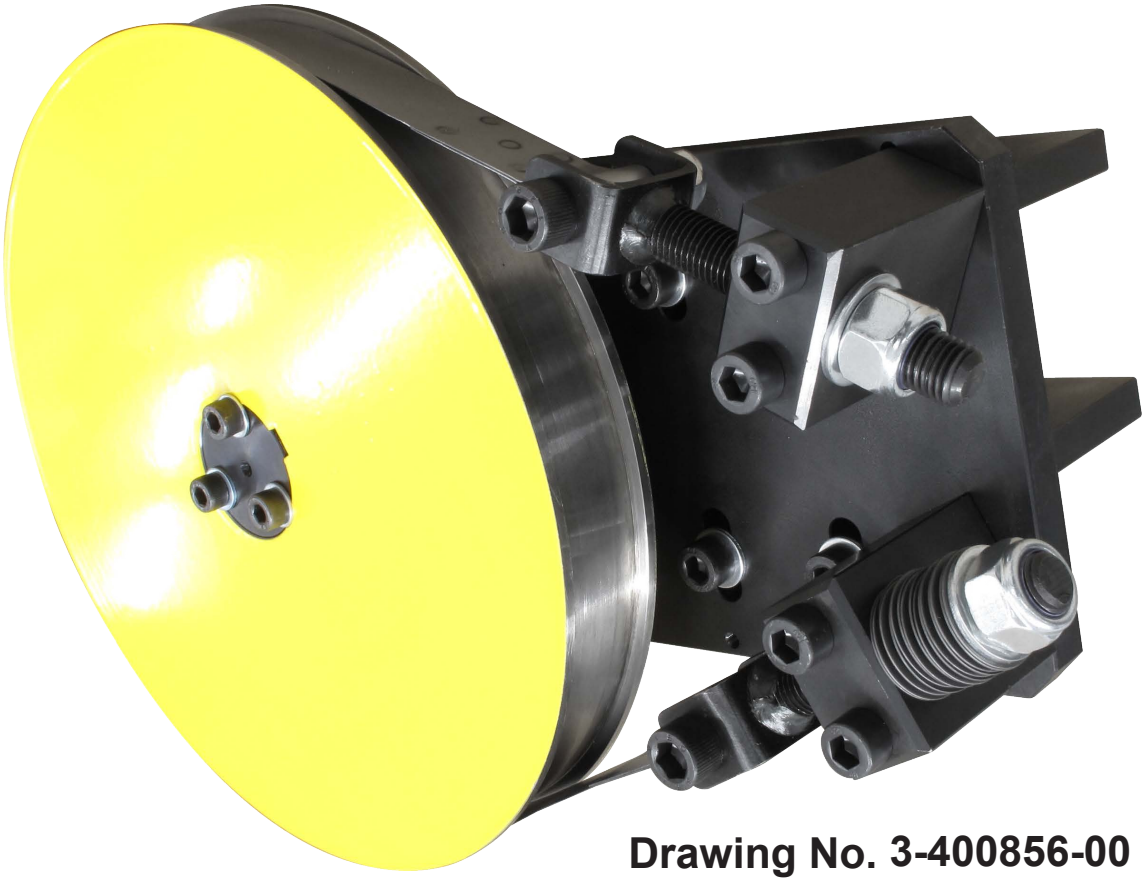

Drawing No. 3-400856-00

Subec AB **Hesselmans Torg 5** **SE- 131 54 Nacka** **Sweden** **Phone: +46-8-88 46 33** **Email: info@subec.se** **Web: www.subec.se**

Copyright © 2026 Subec

PAY-OFF 6 SPOOLS, HYSTERISES BRAKE

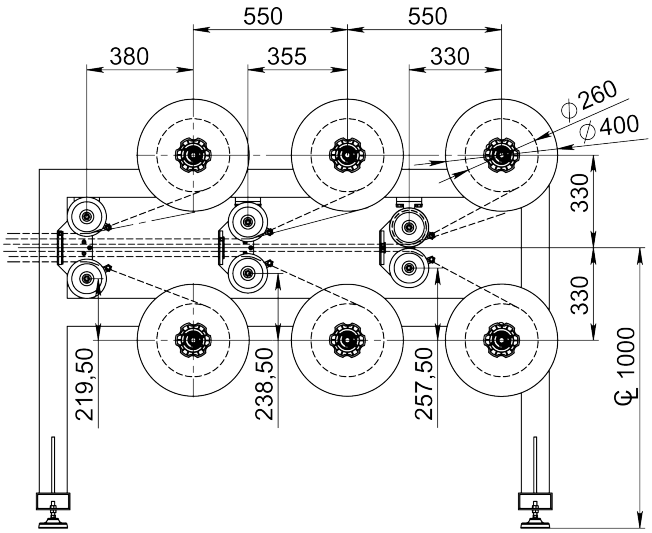

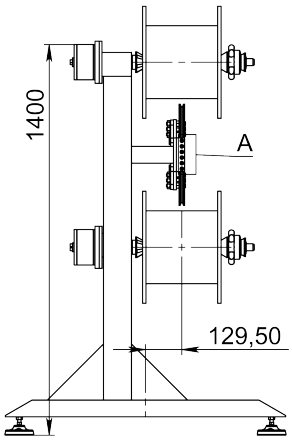

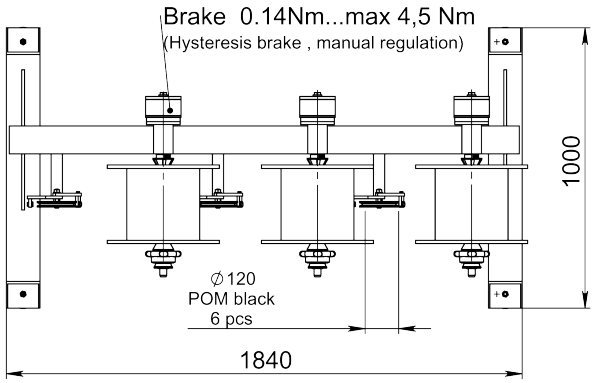

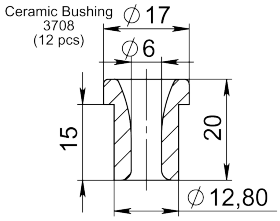

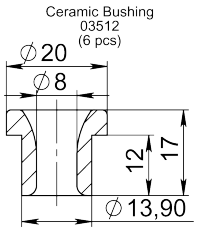

DETAIL
SCALE 1 : 3

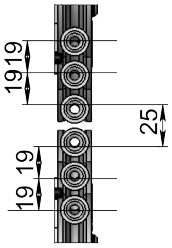



Article: 11328

Drawing No. 3-400855-00

Subec AB **Hesselmans Torg 5** **SE- 131 54 Nacka** **Sweden** **Phone: +46-8-88 46 33** **Email: info@subec.se** **Web: www.subec.se**

Copyright © 2026 Subec

ELECTRIC HYSTERESIS BRAKE, D300

For stationary Pay-Offs

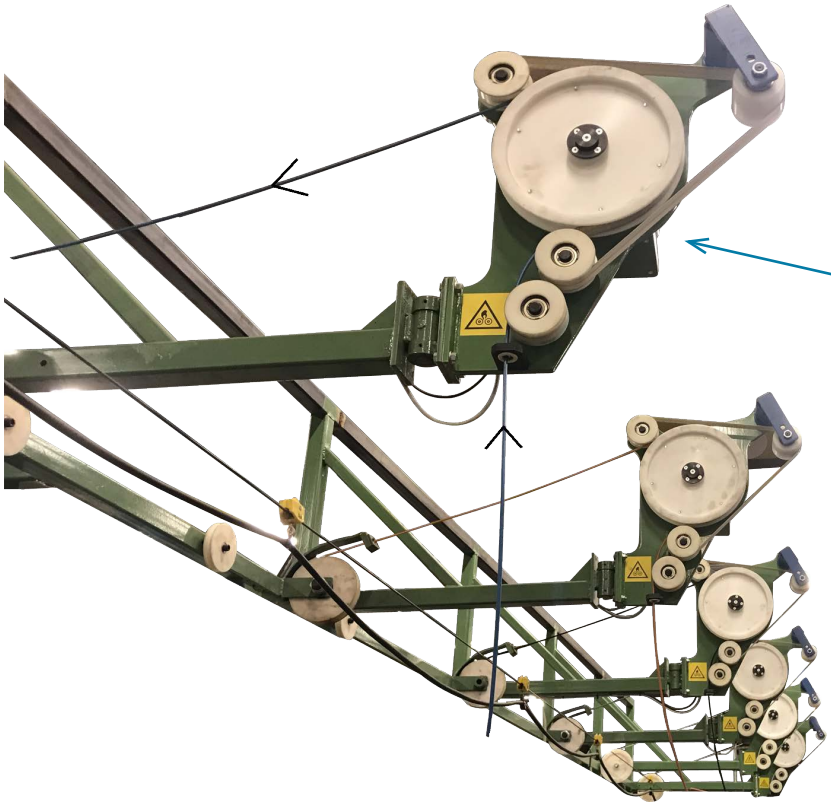

Complete assembly
Max Brake force: 160N
Article: 10891
Weight: 81kg

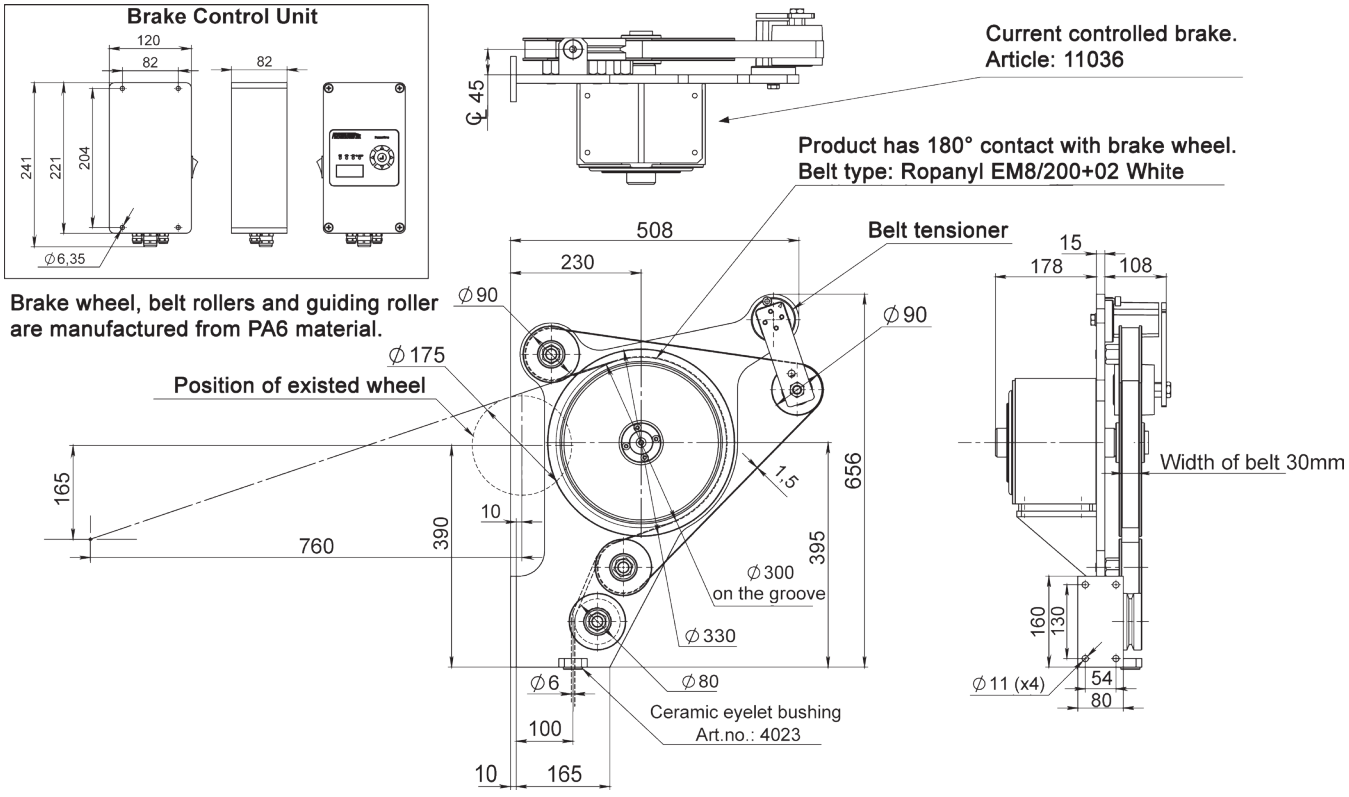

Drawing No. 3-401241-00

Subec AB
Hesselmans Torg 5
SE- 131 54 Nacka
Sweden
Phone: +46-8-88 46 33
Email: info@subec.se
Web: www.subec.se

Copyright © 2026 Subec

TAPE WINDING MACHINE

Ø 330 mm

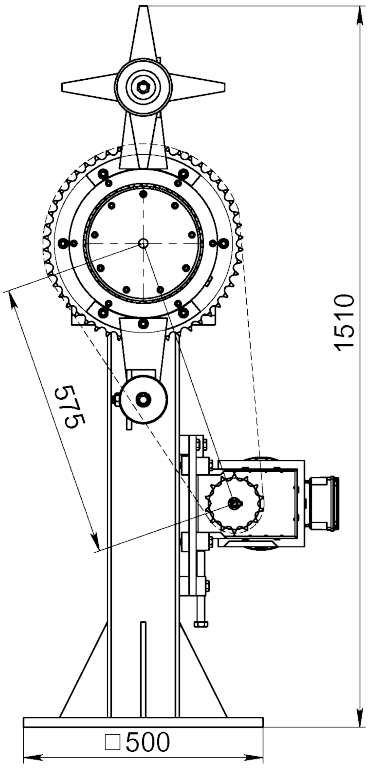

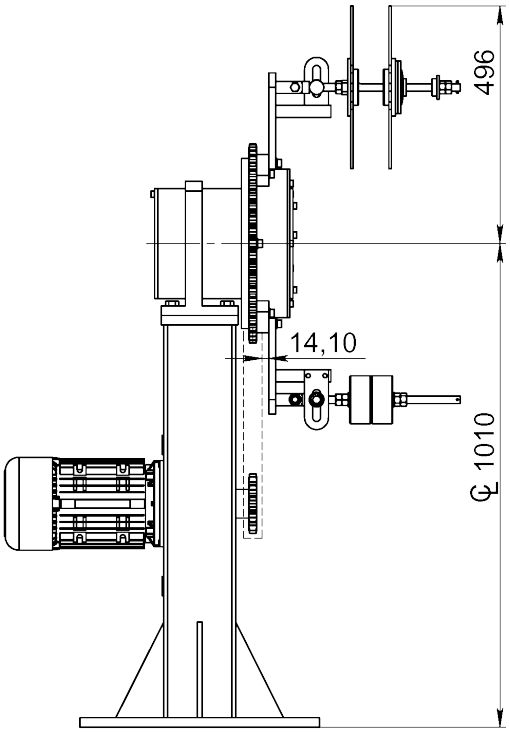

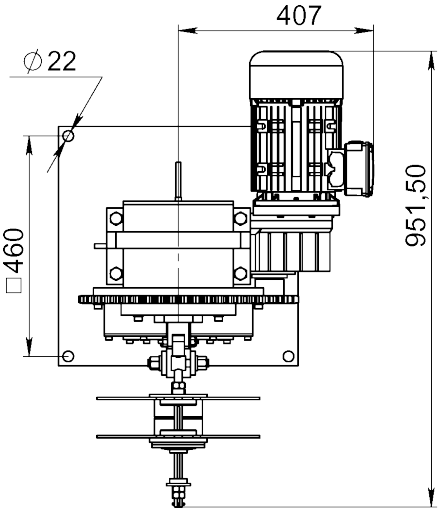



Article: 07931

Drawing No. 3-400961-00

Subec AB **Hesselmans Torg 5** **SE- 131 54 Nacka** **Sweden** **Phone: +46-8-88 46 33** **Email: info@subec.se** **Web: www.subec.se**

Copyright © 2026 Subec

ELECTRIC TAPE BRAKE

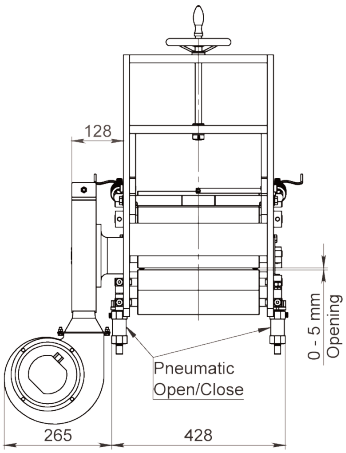

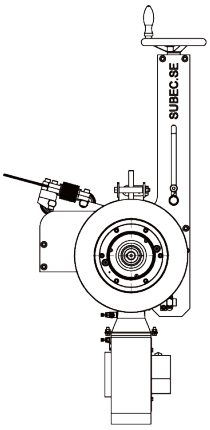

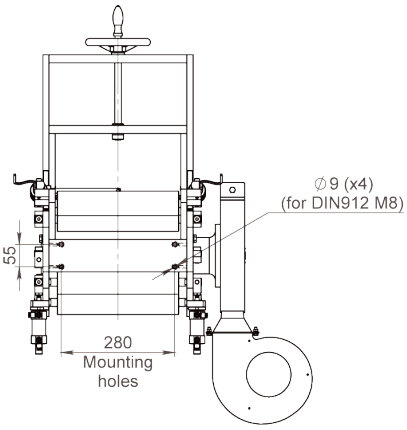

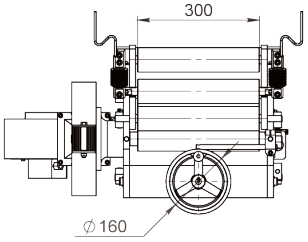

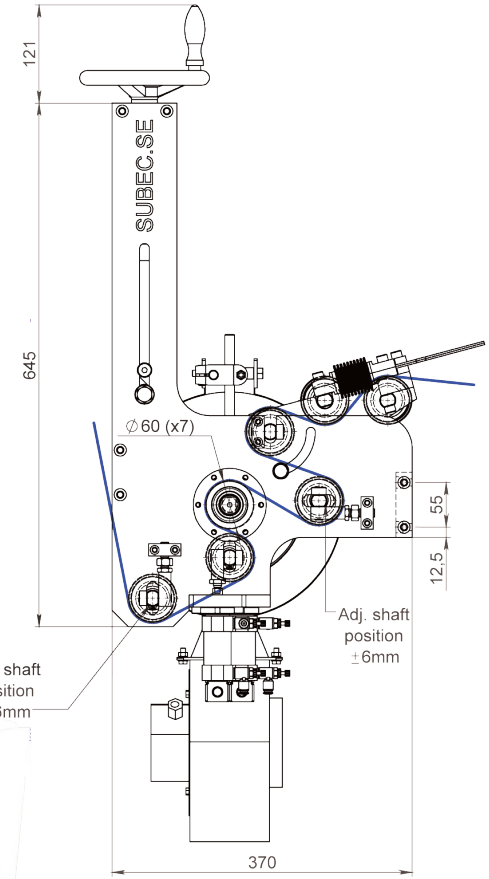



Article: 12785

Drawing No. 3-401354-00

Subec AB **Hesselmans Torg 5** **SE- 131 54 Nacka** **Sweden** **Phone: +46-8-88 46 33** **Email: info@subec.se** **Web: www.subec.se**

Copyright © 2026 Subec

TAPE PAY-OFF

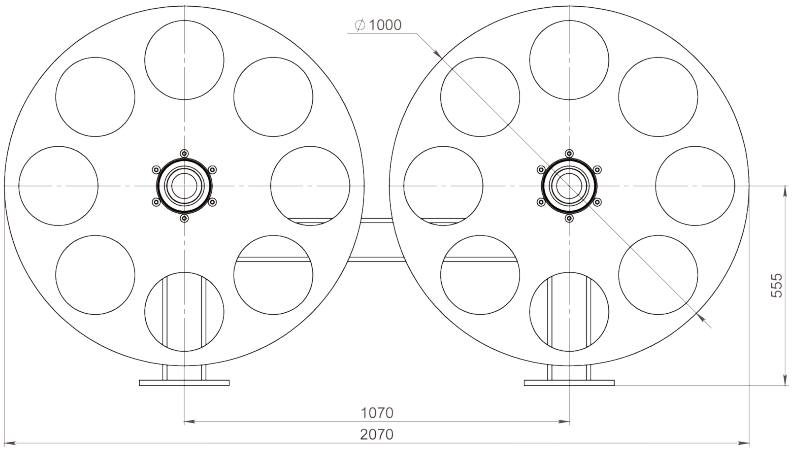

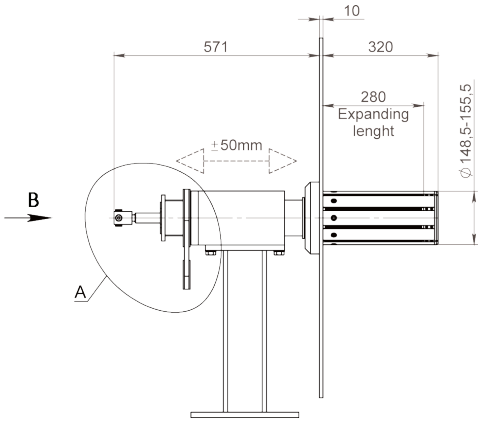

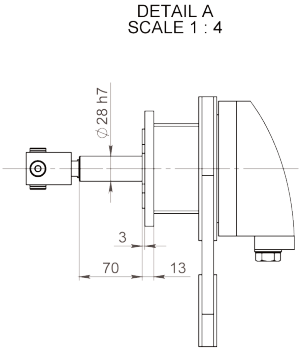

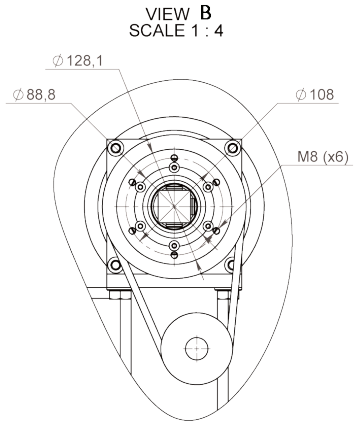

Article: 12914

Info:
Pneumatic mandrel and electric hysteresis brake



Drawing No. 3-401354-00

Subec AB **Hesselmans Torg 5** **SE- 131 54 Nacka** **Sweden** **Phone: +46-8-88 46 33** **Email: info@subec.se** **Web: www.subec.se**

Copyright © 2026 Subec

FLYER PAY-OFF

Ø 1250mm

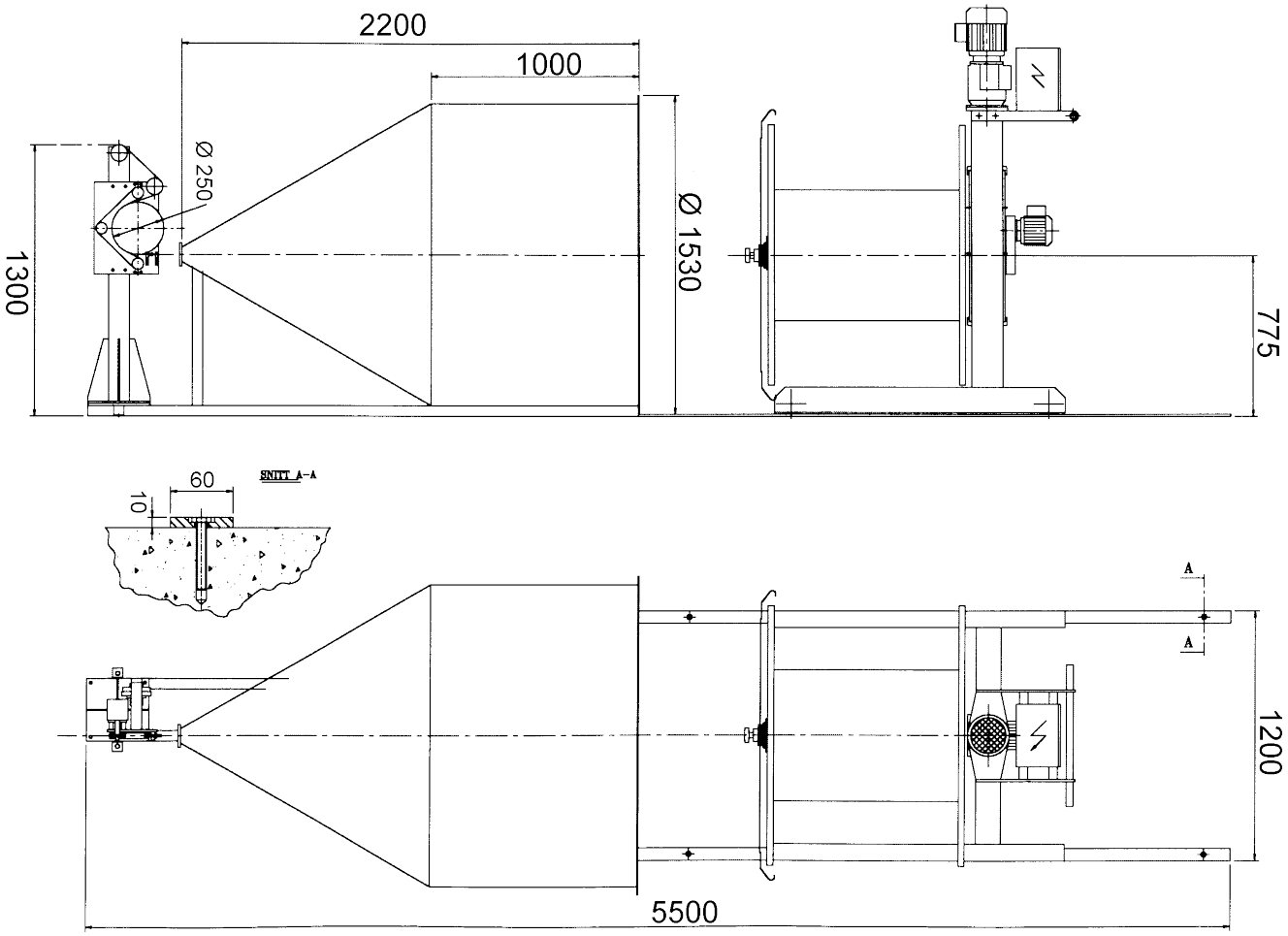

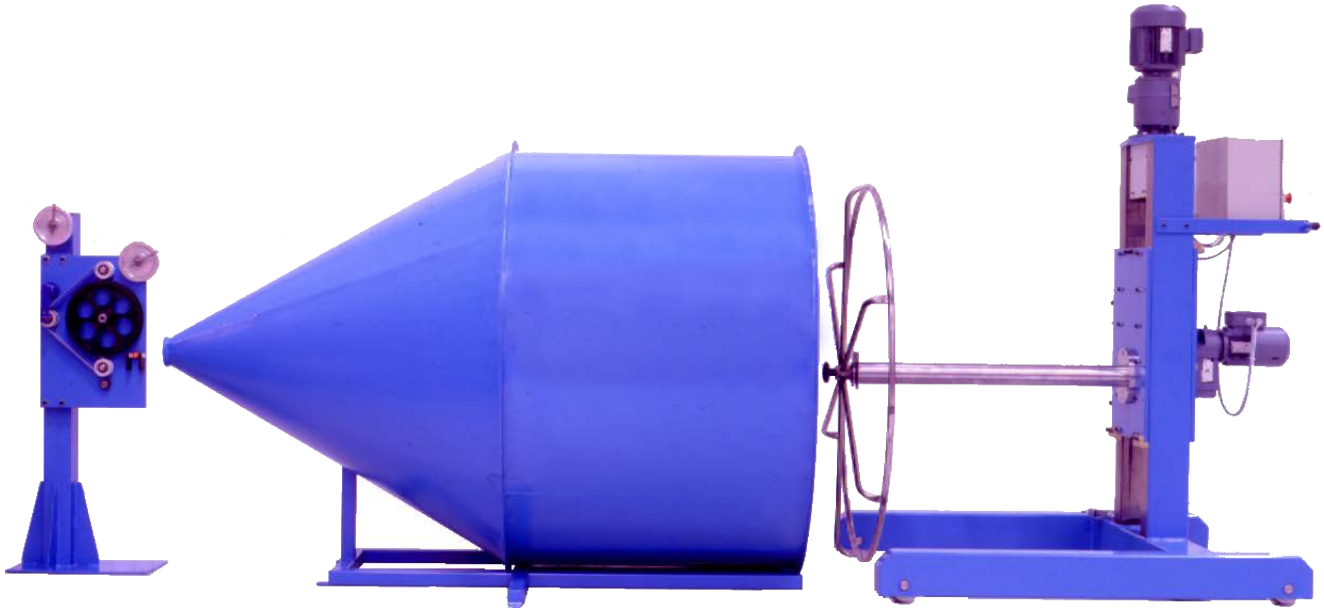

Drawing No. 3-400404-00

Subec AB
Hesselmans Torg 5
SE- 131 54 Nacka
Sweden
Phone: +46-8-88 46 33
Email: info@subec.se
Web: www.subec.se

Copyright © 2026 Subec

DOUBLE FLYER PAY-OFF

Ø 630 - 800 mm

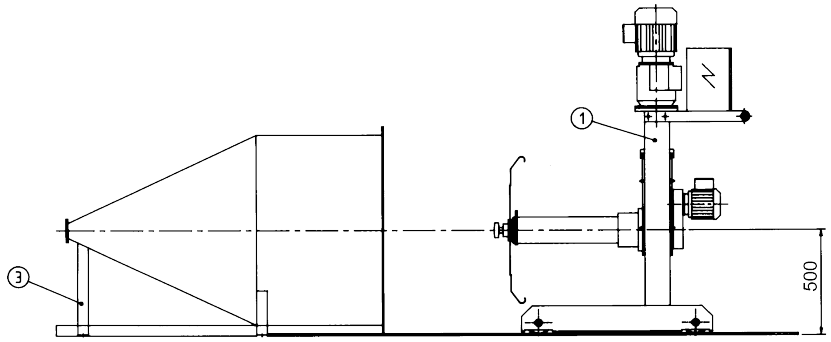

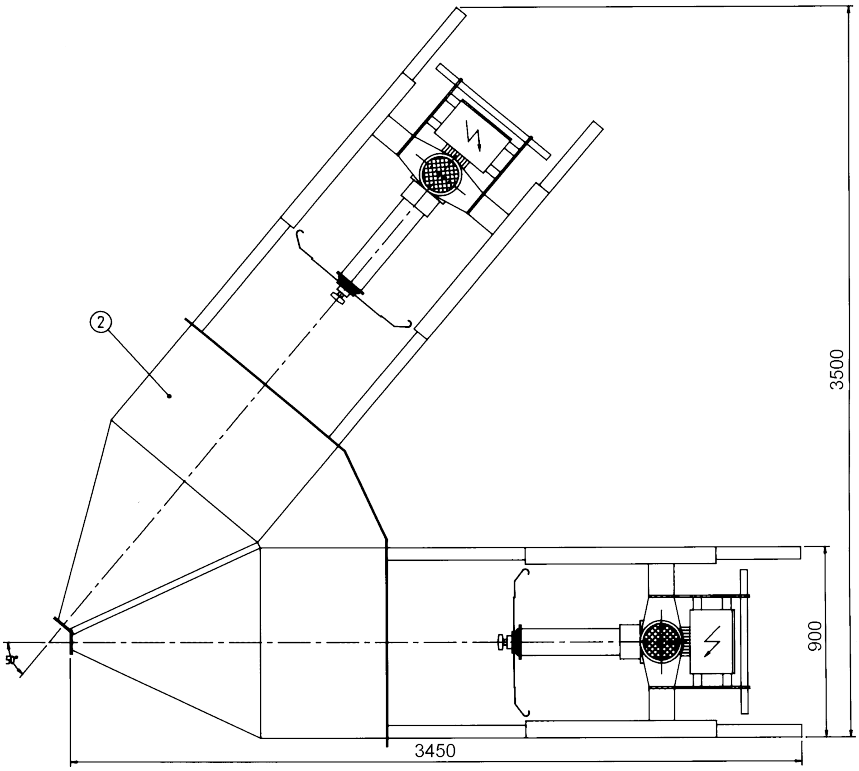

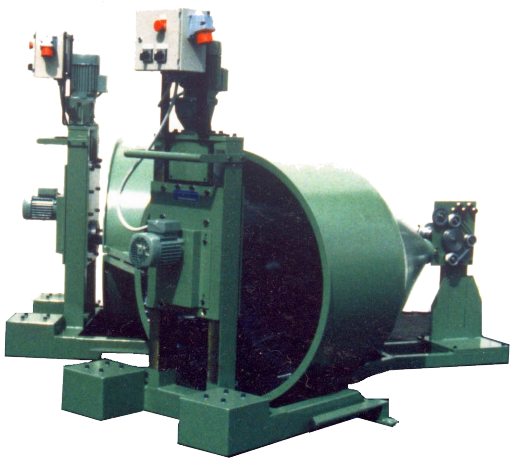

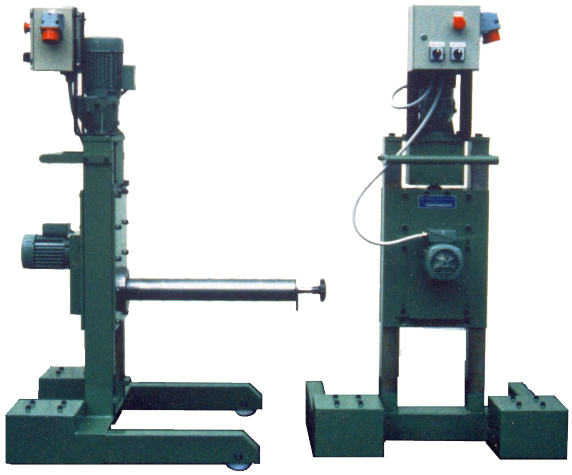

Drawing No. 3-300096-00

Subec AB **Hesselmans Torg 5** **SE- 131 54 Nacka** **Sweden** **Phone: +46-8-88 46 33** **Email: info@subec.se** **Web: www.subec.se**

Copyright © 2026 Subec

DOUBLE FLYER PAY-OFF

Ø 630, 800 or 1200mm



Article: 06898

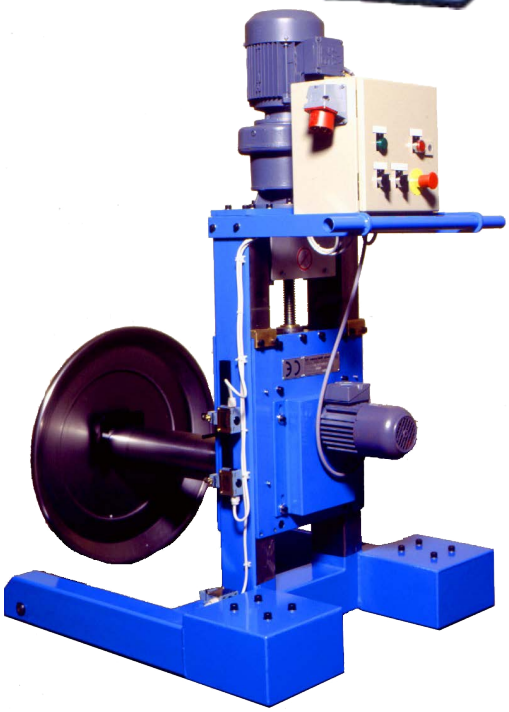

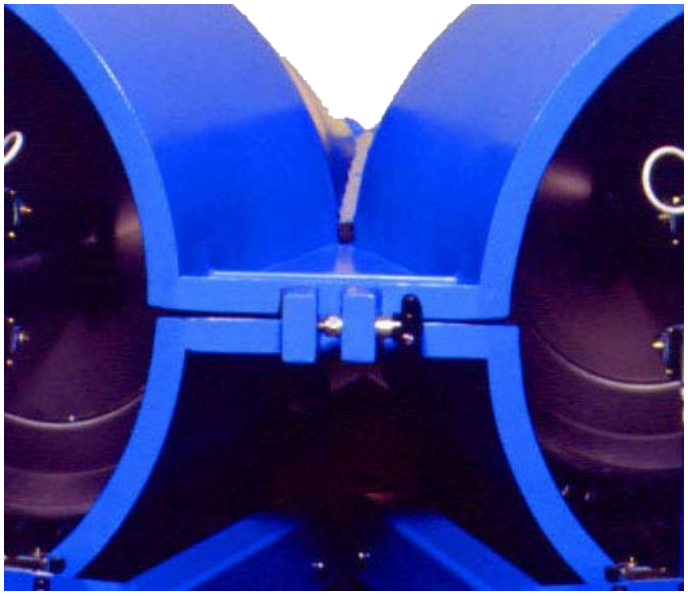

Drawing No. 3-400360-01

Subec AB **Hesselmans Torg 5** **SE- 131 54 Nacka** **Sweden** **Phone: +46-8-88 46 33** **Email: info@subec.se** **Web: www.subec.se**

Copyright © 2026 Subec

DOUBLE FLYER PAY-OFF

Ø 630, 800 or 1200mm

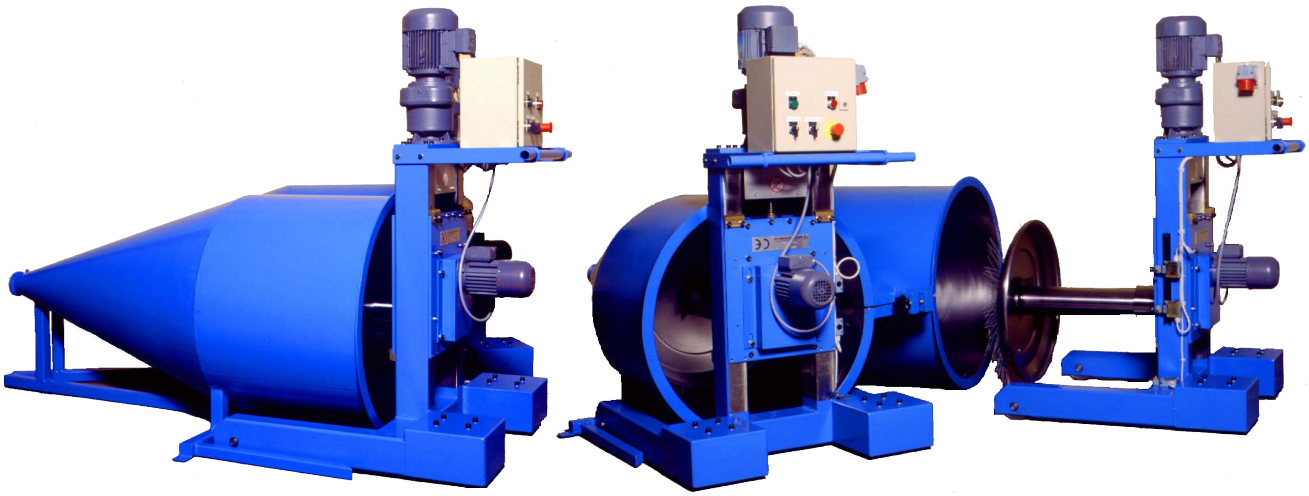

Article: 06898

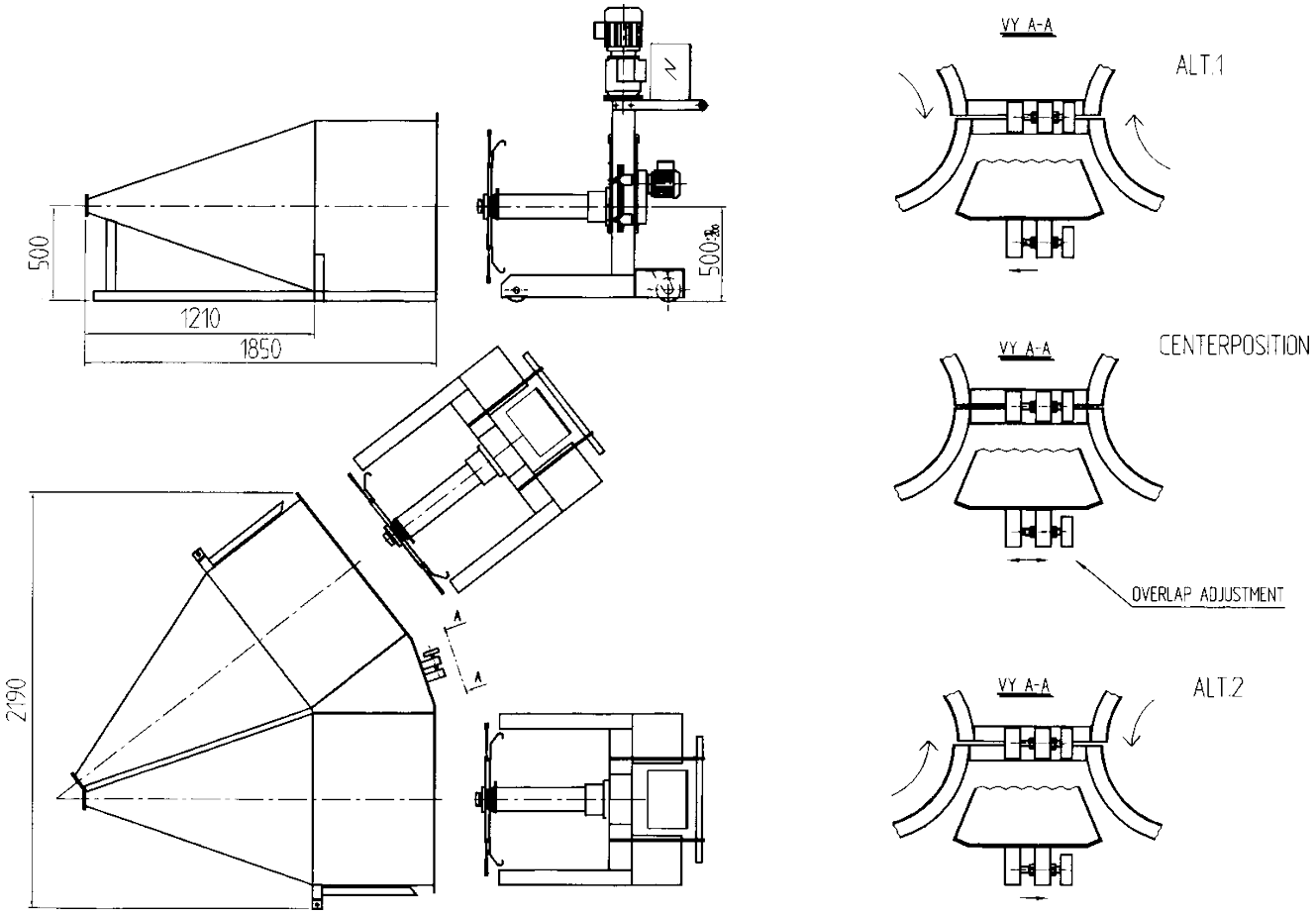

Drawing No. 3-400360-01

Subec AB **Hesselmans Torg 5** **SE- 131 54 Nacka** **Sweden** **Phone: +46-8-88 46 33** **Email: info@subec.se** **Web: www.subec.se**

Copyright © 2026 Subec

PAY-OFF STAND

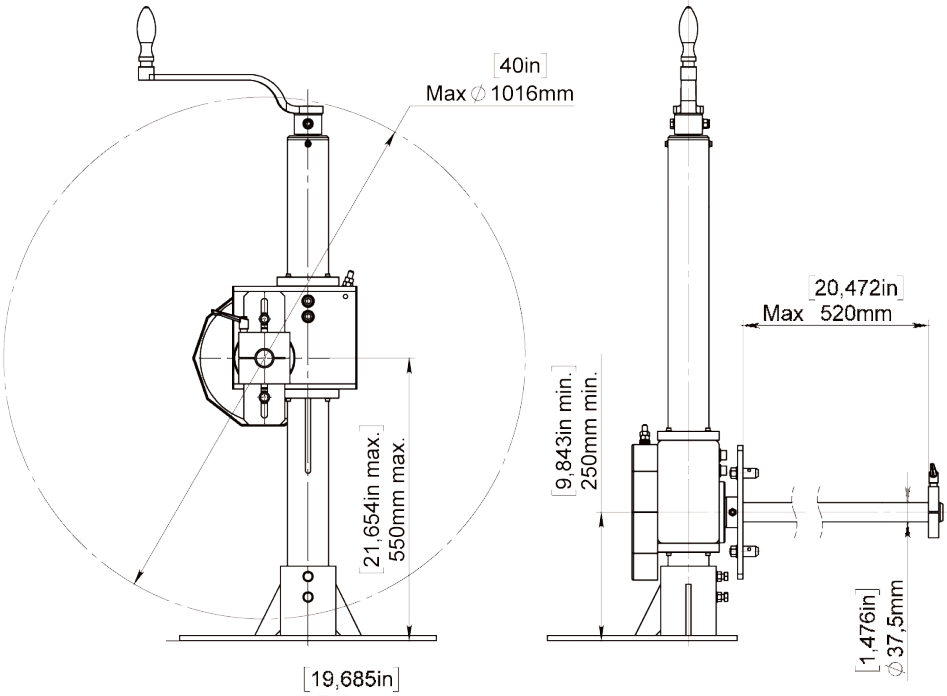

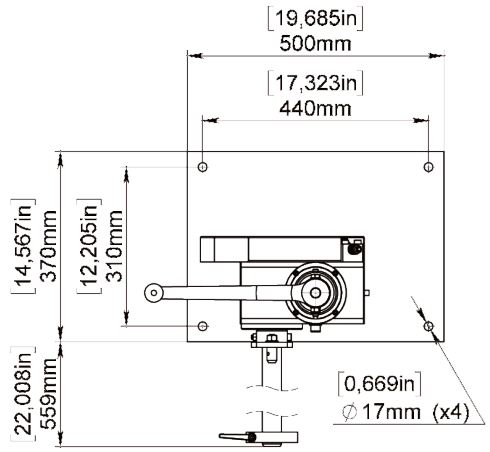

Single Execution
Article: 00692A



Double Execution
Article: 00691

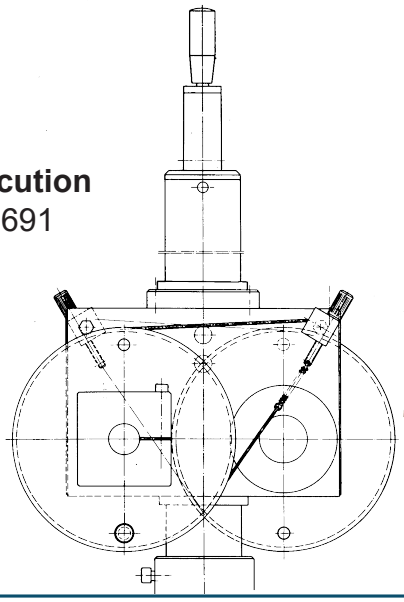

Drawing No. 3-300013-00

Subec AB **Hesselmans Torg 5** **SE- 131 54 Nacka** **Sweden** **Phone: +46-8-88 46 33** **Email: info@subec.se** **Web: www.subec.se**

Copyright © 2026 Subec

SINGLE PAY-OFF STAND, WITH BRAKE

Ø 630 mm

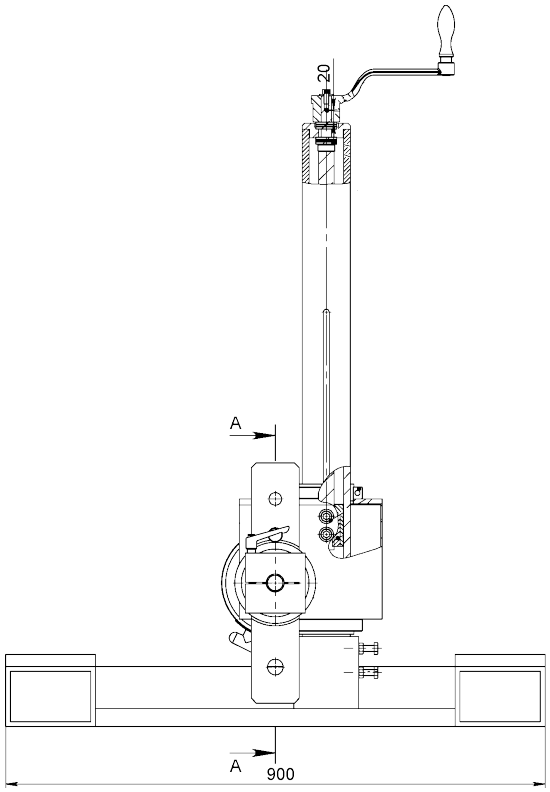

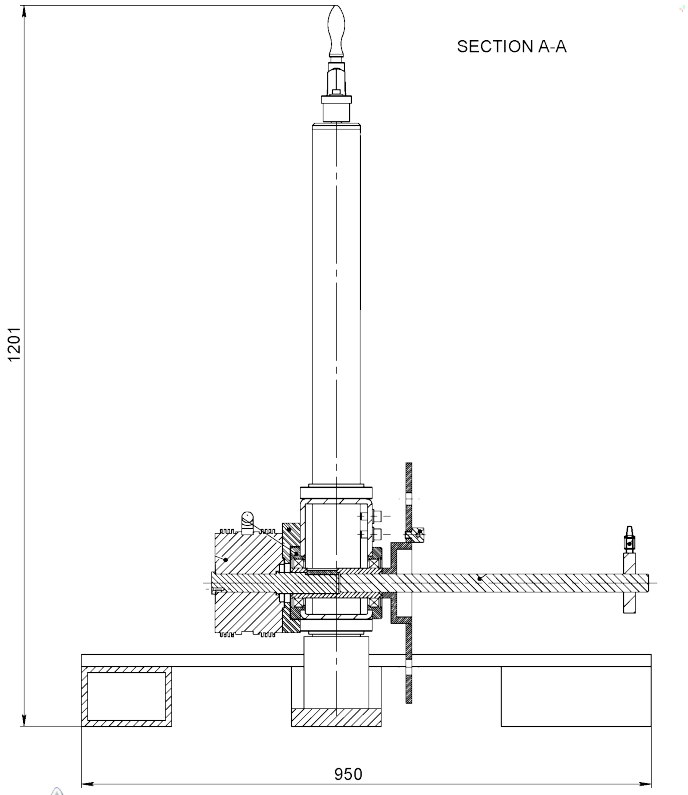

Article: 07945



Drawing No. 3-300013-00

Subec AB **Hesselmans Torg 5** **SE- 131 54 Nacka** **Sweden** **Phone: +46-8-88 46 33** **Email: info@subec.se** **Web: www.subec.se**

Copyright © 2026 Subec

PAY-OFF STAND WITH TAPE BRAKE

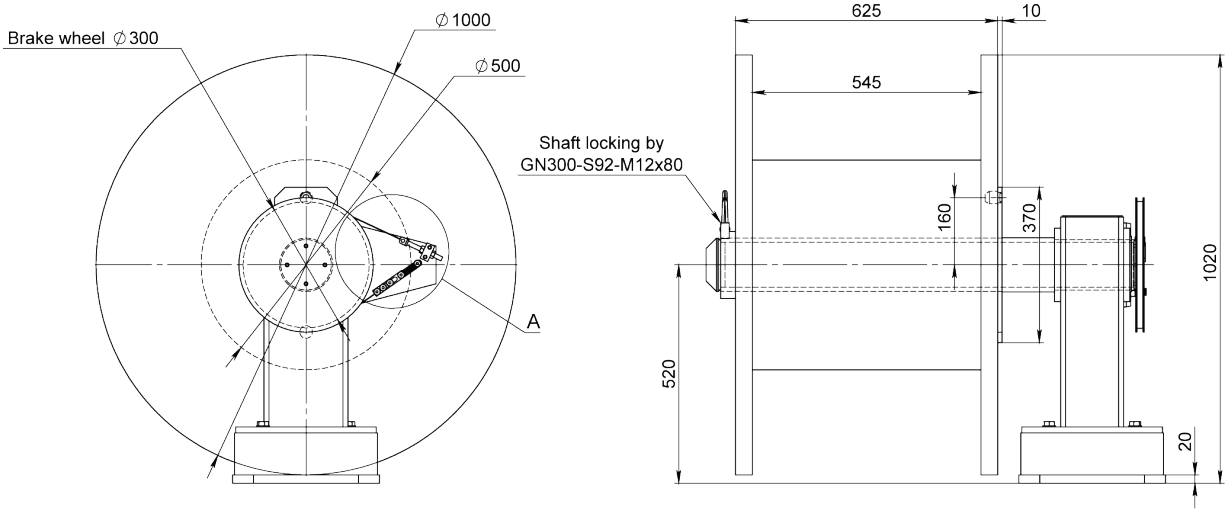

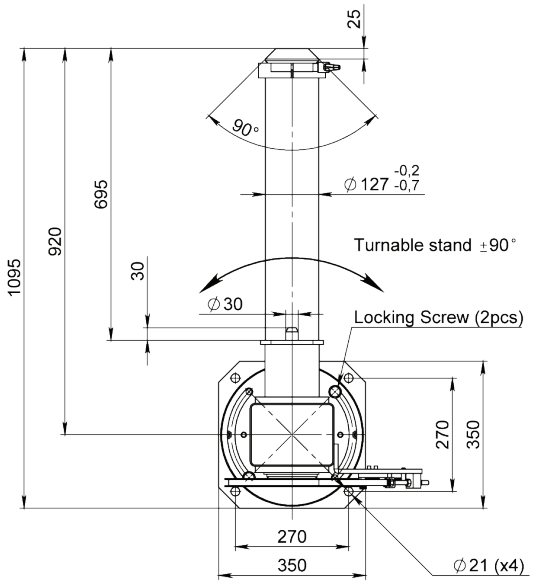

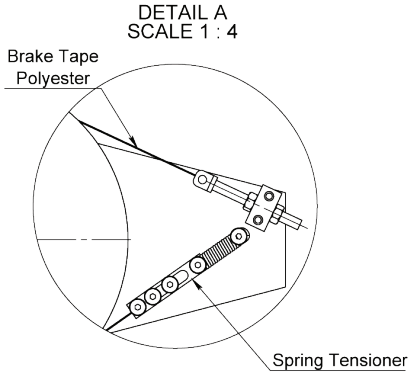

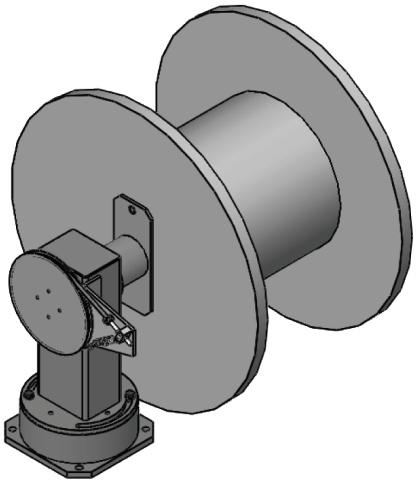



Article: 11133

Drawing No. 3-300013-00

Subec AB **Hesselmans Torg 5** **SE- 131 54 Nacka** **Sweden** **Phone: +46-8-88 46 33** **Email: info@subec.se** **Web: www.subec.se**

Copyright © 2026 Subec

TURNING TABLE

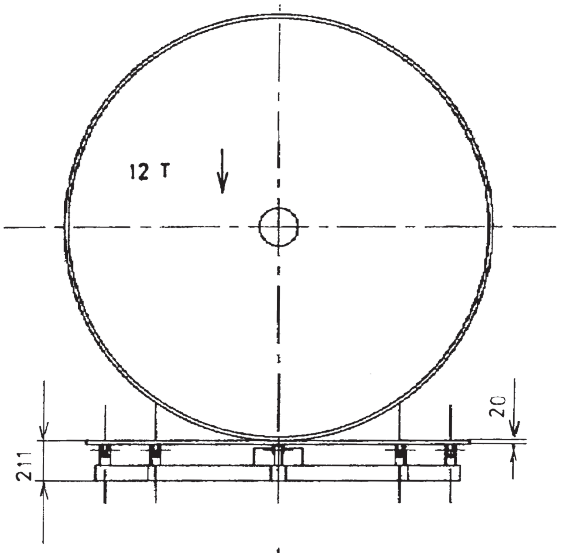

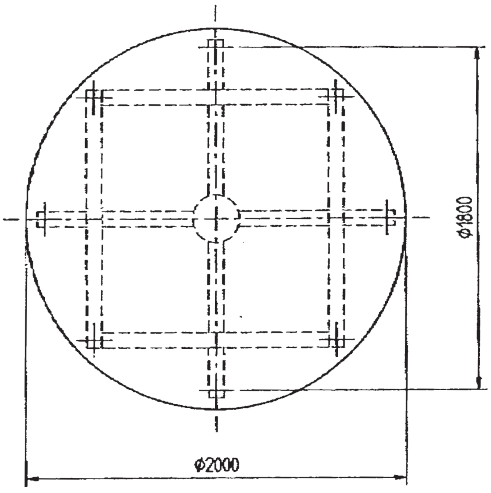

Example: For Cable reels
Max weight: 12ton or acc. to specification

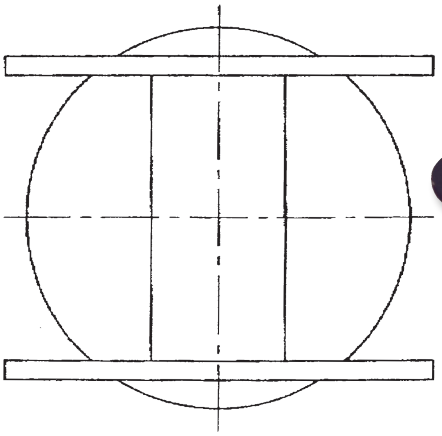

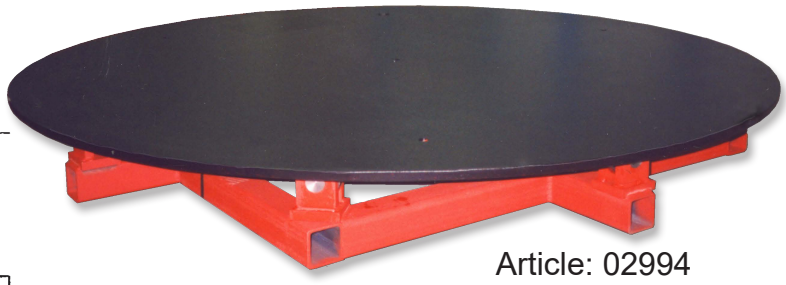

Article: 02994
Drawing No. 3-400241-00

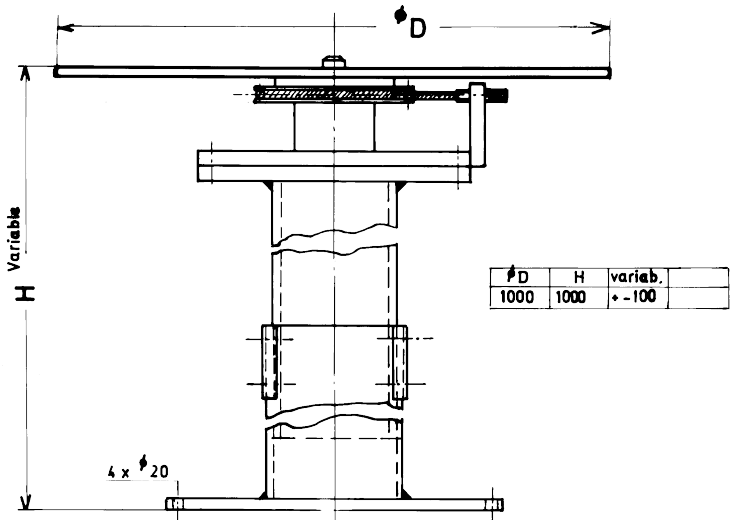

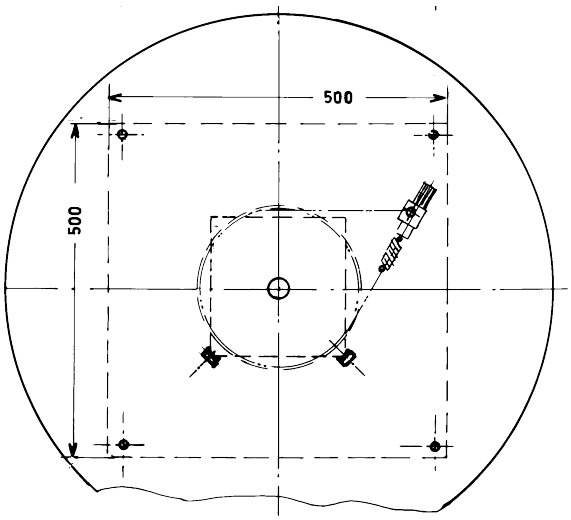

Drawing No. 3-400468-00

Subec AB **Hesselmans Torg 5** **SE- 131 54 Nacka** **Sweden** **Phone: +46-8-88 46 33** **Email: info@subec.se** **Web: www.subec.se**

Copyright © 2026 Subec

LINEAR BIDIRECTIONAL GEAR BOX

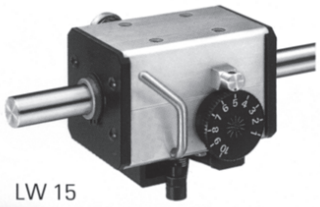

LW 15

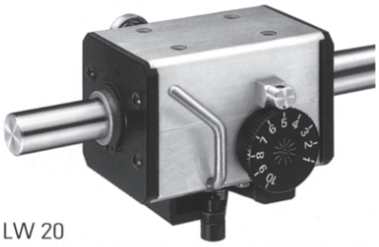

LW 20

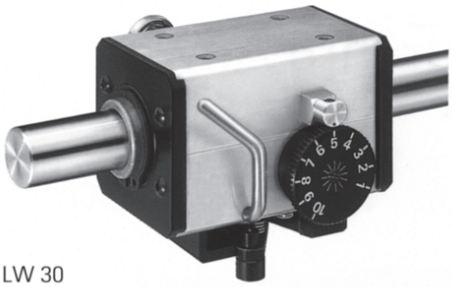

LW 30

Typ	a	b	c	d	e	f	g	h	i	j	k	m	n	o	p	r	s	Øx
LW 15	97	58	59	3,5	32	36	M5	8	43	40	20	42,5	24	M6	16	82,5	12	15
LW 201	80	60	60	-	40	40	M5	20	44	45,5	20	52	24	M10	20	97	15	20
LW 20	118	68	77	4	40	70	M6	9	51	47,5	32	54	35	M10	20	105	15	20
LW 30	145	90	96	6	50	80	M6	11	65,5	62,5	40	67	47	M12	25	132	20	30

Angaben in mm
Dimensions in mm

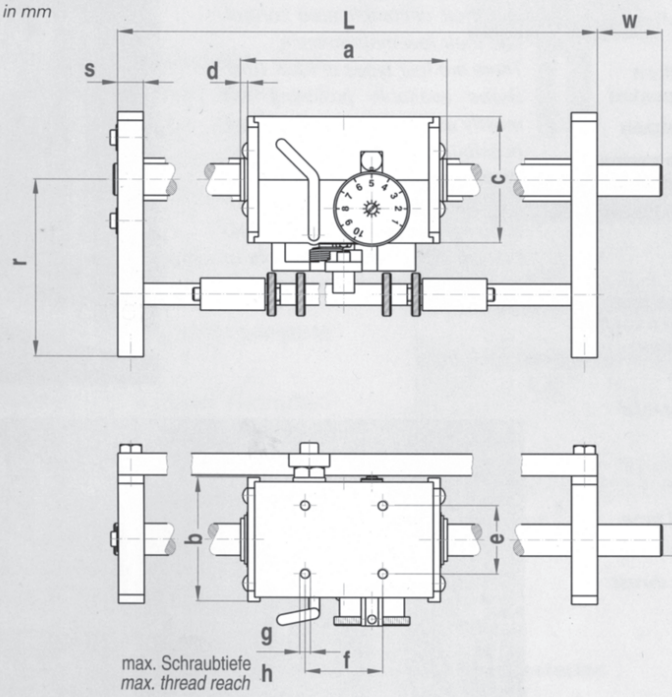

Technische Änderungen vorbehalten
We reserve the right to make technical alterations

Bestellangaben / *Specifications of Order*

Beispiel	*Example*	LW20	L	500	R	40
Getriebetyp	*Type of gear box*					
Wellendrehrichtung*	*Direction of shaft rotation**					
Antriebslänge L (mm)	*Drive length L (mm)*					
Wellenende (rechts/links)	*Shaft end (right/left)*					
Wellenendenlänge W (mm)	*Length of shaft end W (mm)*					

*Wellendrehrichtung
**Direction of shaft rotation*

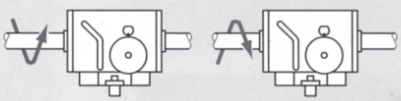

L = links /*left* **R** = rechts /*right*

Drawing No. 3-400485-00

Subec AB **Hesselmans Torg 5** **SE- 131 54 Nacka** **Sweden** **Phone: +46-8-88 46 33** **Email: info@subec.se** **Web: www.subec.se**

Copyright © 2026 Subec

MULTI WIRE PAYOFF STAND WITH FRICTION BRAKE

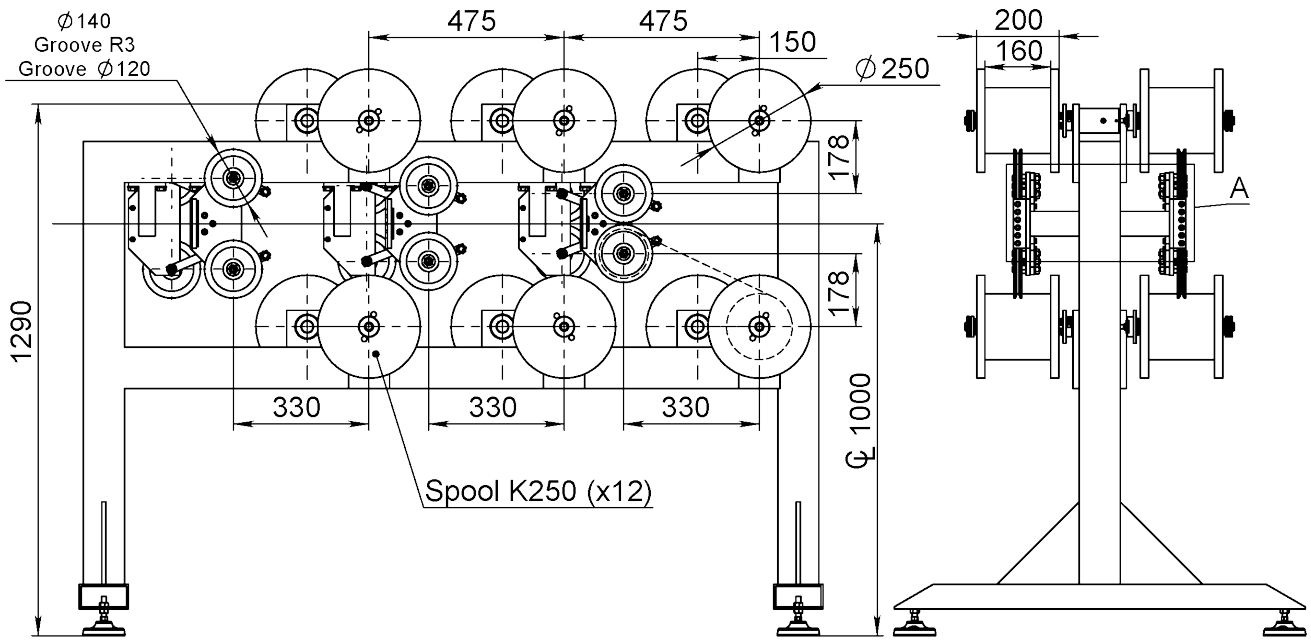



Article: 06444

Drawing No. 3-400855-00

Subec AB **Hesselmans Torg 5** **SE- 131 54 Nacka** **Sweden** **Phone: +46-8-88 46 33** **Email: info@subec.se** **Web: www.subec.se**

Copyright © 2026 Subec

DANCER

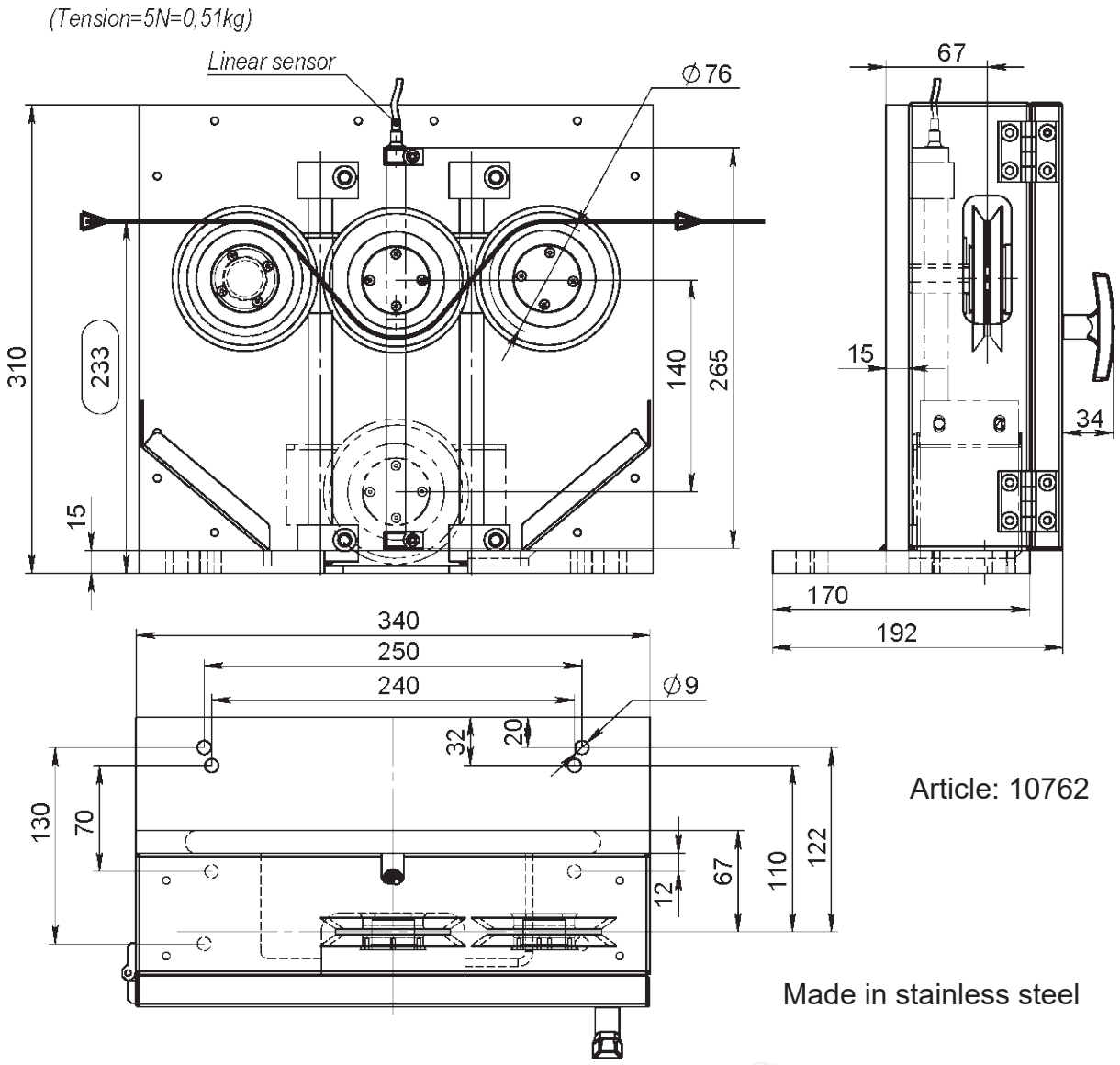

Article: 10762

Made in stainless steel



Drawing No. 3-401233-00

Subec AB **Hesselmans Torg 5** **SE- 131 54 Nacka** **Sweden** **Phone: +46-8-88 46 33** **Email: info@subec.se** **Web: www.subec.se**

Copyright © 2026 Subec

GENERAL TECHNICAL SPECIFICATION

for ceramic products

Material	CODE	*95*	*99,5*	*99,8*	Al_2O_3 content %	ZrO_2	Zirconia
Surface Finishes		*N*	Normal finish r_a=1,0µm				
		D	Diamond Polish r_a=0,5µm				
Hardness		*H*	~1500HV			*XH*	~1800HV

Example Drawing:

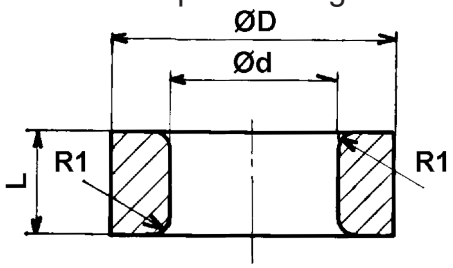

ØD ≤ 10 [+0 / -0,4]
ØD > 10 [+0 / -4%]

Ød ≤ 10 [+0,4 / -0]
Ød > 10 [+4% / -0]

Other dimensions according to DIN ISO 2768cL

Linear Dimensions					
Permissible deviations in mm for ranges in nominal lengths	0,5 - 3	3 - 6	6 - 30	30 - 120	120 - 400
c (coarse)	±0,2	±0,3	±0,5	±0,8	±1,2
Angular Dimensions					
Permissible deviations in mm for ranges in nominal lengths	< 10	10 - 50	50 - 120	120 - 400	400 <
c (coarse)	±1°30’	±1°	±0°30’	0°15’	0°10’
External Radius and Chamfer Heights					
Permissible deviations in mm for ranges in nominal lengths	0,5 - 3	3 - 6	6 <		
c (coarse)	±0,4	±1,0	±2,0		

	Straightness and flatness					**Perpendicularity**			**Symmetry**			**Run out**
Ranges in nominal lengths in mm	< 10	10 - 30	30 - 100	100 - 300	300 - 1000	< 100	100 - 300	300 - 1000	<100	100 - 300	300 - 1000	
L	0,1	0,2	0,4	0,8	1,2	0,6	1	1,5	0,6	1	1,5	0,5

Subec will also produce custom made Ceramics on request.

Subec AB **Hesselmans Torg 5** **SE- 131 54 Nacka** **Sweden** **Phone: +46-8-88 46 33** **Email: info@subec.se** **Web: www.subec.se**

Copyright © 2026 Subec

CERAMIC TUBE EYELETS

Material	CODE	95	99,5	99,8	Al_2O_3 content %	ZrO_2	Zirconia
Surface Finishes		N	Normal finish r_a=1,0µm				
		D	Diamond Polish r_a=0,5µm				
Hardness		H	~1500HV			XH	~1800HV

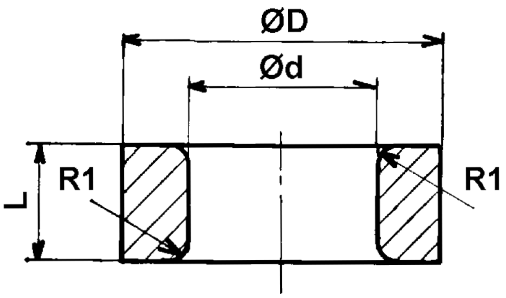

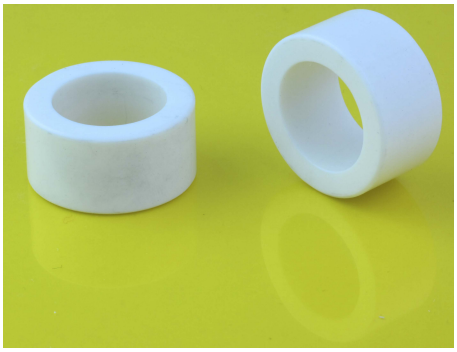

Article	Ød	ØD	L	R1	Spec.
05233*	3,5	9	7	0,5	99,5NXH
06786*	3,5	10	10	1	95NH
02946	3,6	7	5	0,5	
08316*	5,2	8,1	5	1	95NH
04287*	5,5	8,5	5	1	95NXH
04319*	6	9	7	1	99,5NXH
04797*	6	10	3		95NH
05046*	7	12	7	1	95NH
05431	7	15	15	1	95NH
06727	8	12	10	1	95NH
05410*	8	12	20	1	95NH
02804*	10	20	18	3	95NH
02945	11	26	8	2	
02133	12	18,5	12	2	
02639*	12	20	10	2	99,5NXH

Reference see General Techn. Spec
* Stock item

Drawing No. 1-400623-00

Subec AB **Hesselmans Torg 5** **SE- 131 54 Nacka** **Sweden** **Phone: +46-8-88 46 33** **Email: info@subec.se** **Web: www.subec.se**

Copyright © 2026 Subec

CERAMIC TUBE EYELETS

Material	CODE	95	99,5	99,8	Al_2O_3 content %	ZrO_2	Zirconia
Surface Finishes		N	Normal finish r_a=1,0µm				
		D	Diamond Polish r_a=0,5µm				
Hardness		H	~1500HV			XH	~1800HV

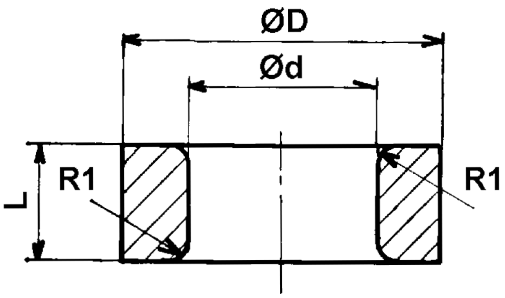

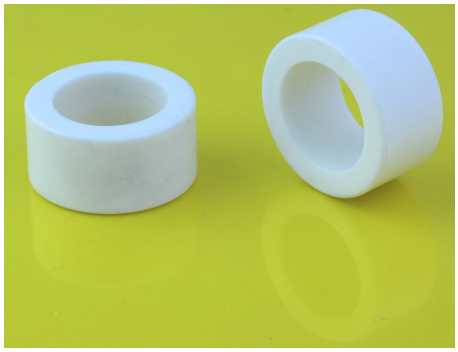

Article	Ød	ØD	L	R1	Spec.
04484*	12	20	10	2	95NH
02640*	12	20	12	2	95NH
03761*	16	22	10	2	95NH
02641*	16	26	10	2	99,5NXH
02642	19	32	12	2	99,5NXH
04529*	20	30	15	0,5	95NH
02655*	25	32	12	2	99,5NXH

Reference see General Techn. Spec

* Stock item

Drawing No. 1-400623-00

Subec AB **Hesselmans Torg 5** **SE- 131 54 Nacka** **Sweden** **Phone: +46-8-88 46 33** **Email: info@subec.se** **Web: www.subec.se**

Copyright © 2026 Subec

CERAMIC TUBE EYELETS

Material	CODE	95	99,5	99,8	Al_2O_3 content %	ZrO_2	Zirconia
Surface Finishes		N	Normal finish r_a=1,0µm				
		D	Diamond Polish r_a=0,5µm				
Hardness		H	~1500HV			XH	~1800HV

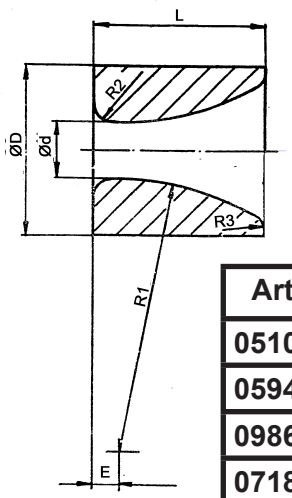

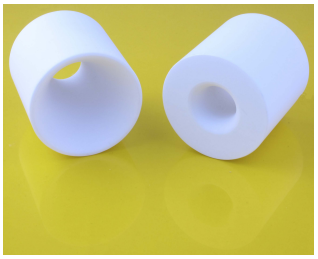

Article	Ød	ØD	L	E	R1	R2	R3	Spec.
05104*	2	10	8	4	5	1	1	99,5NXH
05949*	3	6	8,2	2,1	20	1	1	99,5NXH
09869*	6	10	10	2,1	20	1	1	99,5NXH
07189*	10	18	25	8	50	2,5	1	95DH
06490*	15	30	40	13	90	-	2	95NH
06489*	16	50	50	7	80	5	5	99NH
06291	25	50	30	0	50	1	1	99,5NXH

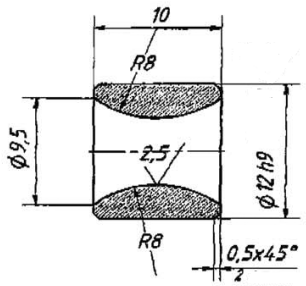

95NH
Article: 05040*

Reference see General Techn. Spec

* Stock item

Drawing No. 1-400877-00

Subec AB **Hesselmans Torg 5** **SE- 131 54 Nacka** **Sweden** **Phone: +46-8-88 46 33** **Email: info@subec.se** **Web: www.subec.se**

Copyright © 2026 Subec

CERAMIC TUBE EYELETS

Material	*CODE*	*95*	*99,5*	*99,8*	Al_2O_3 content %	ZrO_2	Zirconia
Surface Finishes		*N*	Normal finish r_a=1,0µm				
		D	Diamond Polish r_a=0,5µm				
Hardness		*H*	~1500HV			*XH*	~1800HV

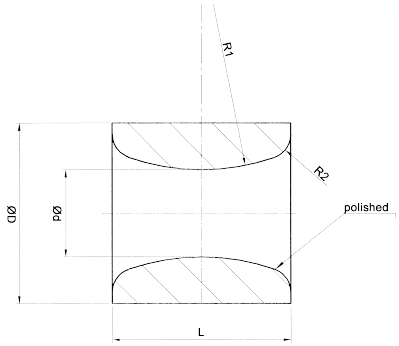

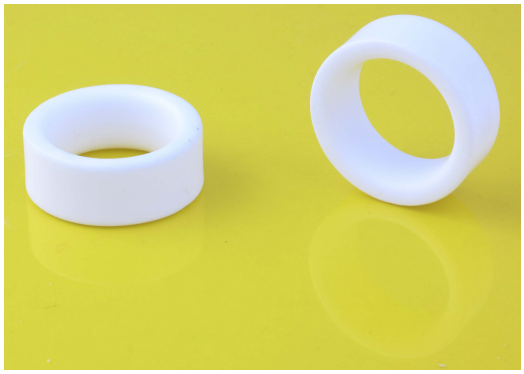

Article	Ød	ØD	L	R1	R2	Spec.
04055	5,8	12	12	15	1,6	95NH
04056	6	14	7	6	1,6	95NH
04033	6	11,8	7	4	1,6	95NH
05305*	7	12	10	10	10	95NH
06226*	9	14	7	10	1,6	95NH
09731	10	15	10	10	1,6	95NH
08912*	12	20	10	8	1,6	99,5DH
05095*	12,5	18	14	12	12	95NH
7727*	15	25	17	40	2	99,5DH
06110*	18	26	10	16,5	2	95NH
06768	20	26	10	10	1	95NH
06290	25	32	12	10	2,5	99,5NH
06111*	32	44	18	20	3	95NH
05743*	55	70	22	25	4	95NH
04858*	70	85	22	25	4	95NH

Reference see General Techn. Spec

* Stock item

Drawing No. 1-400623-00

Subec AB **Hesselmans Torg 5** **SE- 131 54 Nacka** **Sweden** **Phone: +46-8-88 46 33** **Email: info@subec.se** **Web: www.subec.se**

Copyright © 2026 Subec

CERAMIC GUIDE WITH FLANGE

Material	*CODE*	*95*	*99,5*	*99,8*	Al_2O_3 content %	ZrO_2	Zirconia
Surface Finishes		*N*	Normal finish r_a=1,0µm				
		D	Diamond Polish r_a=0,5µm				
Hardness		*H*	~1500HV			*XH*	~1800HV

Article	Ød	ØD	ØF	L	E	Spec.
06382*	0,5	4	5	4	1	99,5NXH
04373*	0,5	5,6	8	1,6	0,8	95NH
06383*	0,75	4	5	4	1	99,5NXH
9023*	1,5	4	5,5	5,5	1,5	95NH
10669*	1,8	6,4	9,5	13,8	3,8	ZrO_2D
04804*	2	4,5	6	4,5	1,5	95NH
06117	2,2	5,8	7,7	4,5	2,3	95NH
05782	2,5	4,4	5,7	4,8	1	95NH
04802A*	2,5	5	6,5	7	2	95NXH
10667*	2,8	6,2	9,3	8,8	3,2	95DH
07921*	3	4	5	4	1	95NH
04305*	3	6,6	9,5	8,3	2	95NH
05477*	3,2	6	7,7	6	2	95NH
10668*	3,2	6,2	9,3	8,8	3,2	95DH
06103*	3,4	6	8	5,5	2	95NXH
03871*	3,5	6	8,7	3,8	1,5	
07013*	3,5	7,5	9	8,5	2	95NH
05495*	3,9	6	7,9	6,2	1,6	95NH
06230*	4	6,3	8,7	9,5	1,6	95NH
03119*	4	6,5	7,8	6,8	2	95NH
9022*	4	7,5	10,7	8,5	1,8	99,5NXH
05399	4,15	7,15	10,15	10	4	95NH
06116	4,2	6,1	10,1	9,5	2,7	95NH
04796	4,3	6	10	6	2,5	99,5NXH
05494*	4,5	7	9,2	7	2	95NH
06767*	4,9	8,6	10,6	15,1	4,5	95NH
09983*	5	8	12	10	4	99,5NXH
05245*	5	7,6	10	4	1	95NH
05645*	5,1	13	17	20	5	99,5NXH

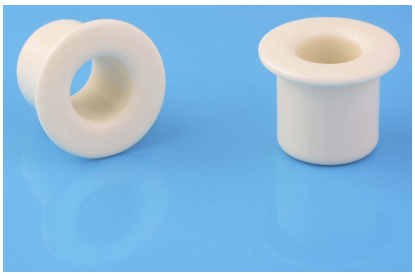

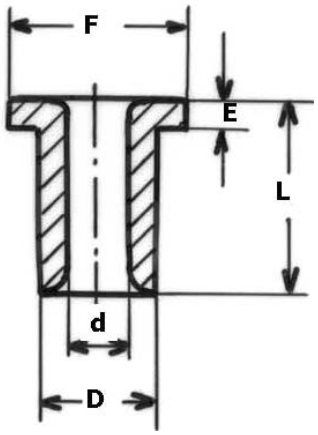

Reference see General Techn. Spec

* Stock item

Drawing No. 1-400603-00

Subec AB **Hesselmans Torg 5** **SE- 131 54 Nacka** **Sweden** **Phone: +46-8-88 46 33** **Email: info@subec.se** **Web: www.subec.se**

Copyright © 2026 Subec

CERAMIC GUIDE WITH FLANGE

Material	CODE	95	99,5	99,8	Al_2O_3 content %	ZrO_2	Zirconia
Surface Finishes		N	Normal finish r_a=1,0µm				
		D	Diamond Polish r_a=0,5µm				
Hardness		H	~1500HV			XH	~1800HV

Article	Ød	ØD	ØF	L	E	Spec.
03078*	5,2	8,1	12,3	10	4	95NH
14996*	5,5	10	12	9	2	99,8NH
03620*	6	10,5	12,5	8	3	95NH
04358*	6	11,7	15	15	3	95NH
05962	6	12,3	16	14,8	4	95NH
06467	6	15	18	15	5	99,5NXH
05244*	6,5	9,8	10,8	6	1	95NH
03709*	6,5	12,6	17	20	5	95NH
05246*	7,5	10	13	12	3,2	95NH
05069*	7,5	10	13	12	3,2	99,5NXH
05749	8	15	20	35	5	99,5NXH
06115*	8,9	10,6	14,8	12,2	2,65	95NH
02819*	9	12	16	12,5	3,2	95NH
08202*	9	12,8	17	30	3,0	95NH
05479*	9	12,9	15	10	1,6	95NH
03361*	10	14	16	10	4	95NH
04308*	10	14,9	16	20	5	95NH
05696*	10	15	18	20	4	95NH
05076*	10	17	20	10	3	95NH
04309*	11	20	24	8	3	95NH
03810*	11,5	19	26	20	2	95NH
05411	12	18	22	13,5	3,5	95NH
06728	12	25	32	10	4	95DH
06114	12,7	18,6	22,45	15,5	3,45	95NH
09026*	13	20	25	20	5,5	99,7NH
04782*	14	19	24	20	5	95NH
05493*	14,5	26	30	20	8	99,5NXH
05826*	14,7	21,4	26,8	20,85	5,75	95NH
16825*	15	22	28	23	3	99,8DXH

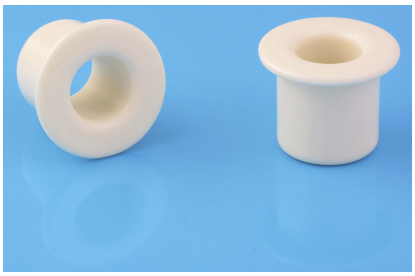

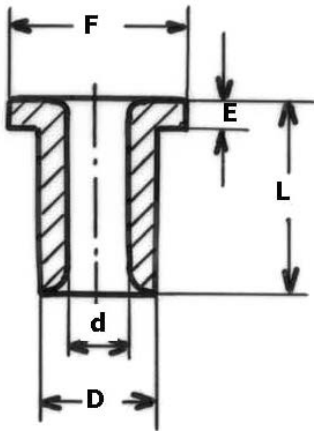

Reference see General Techn. Spec

* Stock item

Drawing No. 1-400603-00

Subec AB **Hesselmans Torg 5** **SE- 131 54 Nacka** **Sweden** **Phone: +46-8-88 46 33** **Email: info@subec.se** **Web: www.subec.se**

Copyright © 2026 Subec

CERAMIC GUIDE WITH FLANGE

Material	*CODE*	*95*	*99,5*	*99,8*	Al_2O_3 content %	ZrO_2	Zirconia
Surface Finishes		*N*	Normal finish r_a=1,0µm				
		D	Diamond Polish r_a=0,5µm				
Hardness		*H*	~1500HV			*XH*	~1800HV

Article	Ød	ØD	ØF	L	E	Spec.
16826*	15	22	28	33	3	99,8DXH
07595	15	27	33	33	3	99,5DXH
04288*	16	20	24	16	4	95NH
05781*	16	23,8	28	22	8	99,5NXH
05899	16	25	32	20	6	95NH
09025*	19,05	26,3	31,75	19,8	6,35	95NH
04304*	20	25,5	31,5	8	2	95NH
05171A*	20	30	35	20	5	99,5NXH
04585*	20	35	40	17,5	2,5	95NH
04081	24	30	46	71	3	95NH
04893	25,1	30	50	109	10	99,5NXH
12710*	26	32	36	20	5	95NH
06465	30,1	35,7	50	28	8	99,5NXH
05900	35	47	64	18	4	95NH
07596	35	47±0.2	53	33	3	99,5DXH
18502P1A	40	50,5	63	38	7	99,5DXH
04084*	57	62	72	113	5	95NH

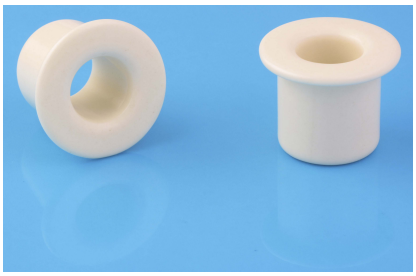

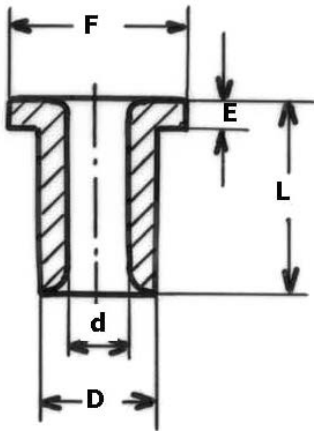

Reference see General Techn. Spec
* Stock item

Drawing No. 1-400603-00

Subec AB **Hesselmans Torg 5** **SE- 131 54 Nacka** **Sweden** **Phone: +46-8-88 46 33** **Email: info@subec.se** **Web: www.subec.se**

Copyright © 2026 Subec

CERAMIC GUIDE WITH FLANGE

Material	*CODE*	*95*	*99,5*	*99,8*	Al_2O_3 content %	ZrO_2	Zirconia
Surface Finishes		*N*	Normal finish r_a=1,0µm				
		D	Diamond Polish r_a=0,5µm				
Hardness		*H*	~1500HV			*XH*	~1800HV

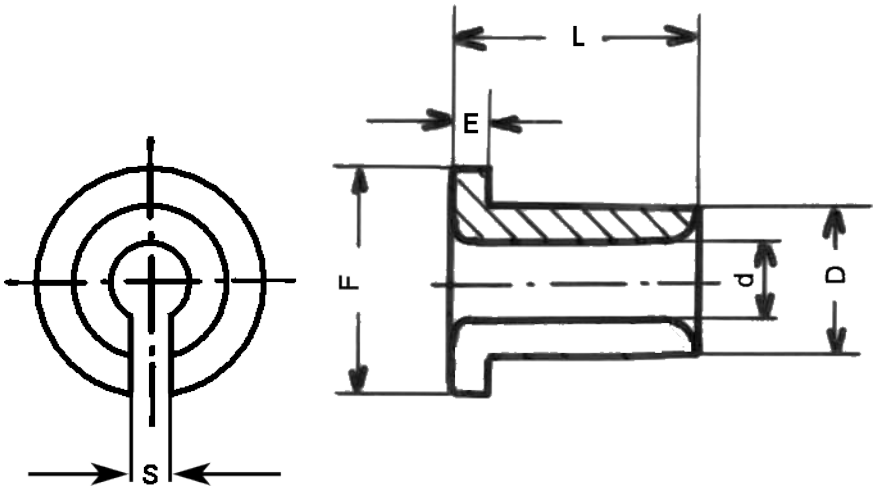



Article	Ød	ØD	ØF	L	E	S	Spec.
11266*	3,5	8	9,5	3,5	1,1	3	99,5NH
10864	3,9	7,5	9,5	6	2	3,2-3,6	99,5NH
07620*	5	7	8	5,5	1,5	4	95NH
05830	13,1	20,4	26,5	25,4	5	5,3	95NH
13375	28,6	41,3	66,7	36,5	6,4	14	99NH

Reference see General Techn. Spec
* Stock item

Drawing No. 3-401343-00

Subec AB **Hesselmans Torg 5** **SE- 131 54 Nacka** **Sweden** **Phone: +46-8-88 46 33** **Email: info@subec.se** **Web: www.subec.se**

Copyright © 2026 Subec

CERAMIC GUIDE WITH FLANGE

Material	*CODE*	*95*	*99,5*	*99,8*	Al_2O_3 content %	ZrO_2	Zirconia
Surface Finishes		*N*	Normal finish r_a=1,0µm				
		D	Diamond Polish r_a=0,5µm				
Hardness		*H*	~1500HV			*XH*	~1800HV

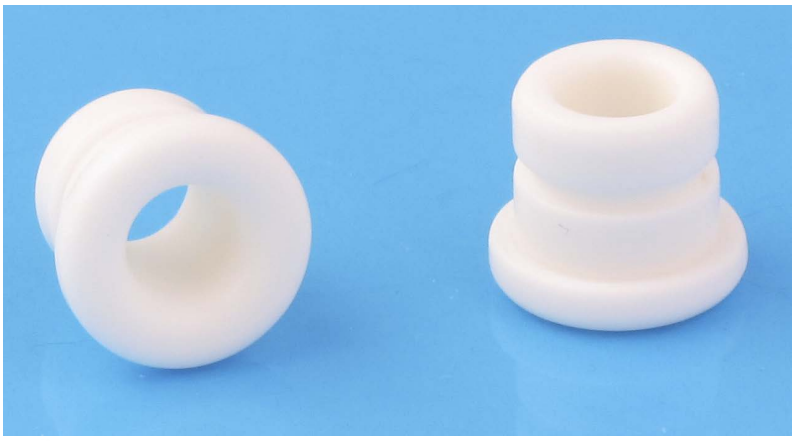

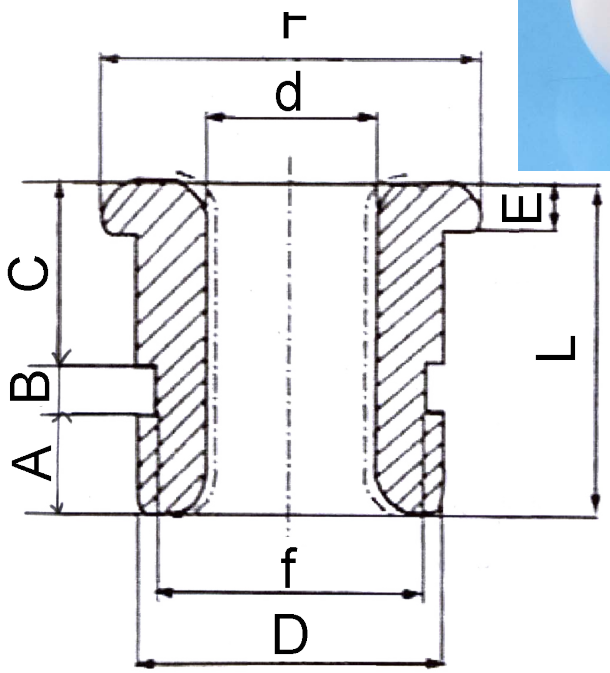

Article	d	D	F	f	E	L	A	B	C	Spec.
06642*	4,3	7,7	9,6	6,7	2	8,3	2,7	1,0	4,6	95NH
06024*	11,5	23	32	21	3	15,5	3	1,5	8	95NH
09915*	12	20	30	16,5	5	30	2,5	2	20,5	95NH
10197	12	20	30	16,5	5	30	2,5	2	20,5	99,7NXH
15045*	12,2	21,5	30,5	18,6	6	25	2	2	21	99,7NXH
05901	17	25	31	21	4	23	3	6	10	95NH
11129	22	35	43	33	11	32	9,5	1,8	9,7	99,7NXH

Reference see General Techn. Spec

Drawing No. 1-400626-00

* Stock item

Subec AB **Hesselmans Torg 5** **SE- 131 54 Nacka** **Sweden** **Phone: +46-8-88 46 33** **Email: info@subec.se** **Web: www.subec.se**

Copyright © 2026 Subec

CERAMIC GUIDE WITH FLANGE

Material	*CODE*	*95*	*99,5*	*99,8*	Al_2O_3 content %	ZrO_2	Zirconia
Surface Finishes		*N*	Normal finish r_a=1,0µm				
		D	Diamond Polish r_a=0,5µm				
Hardness		*H*	~1500HV			*XH*	~1800HV

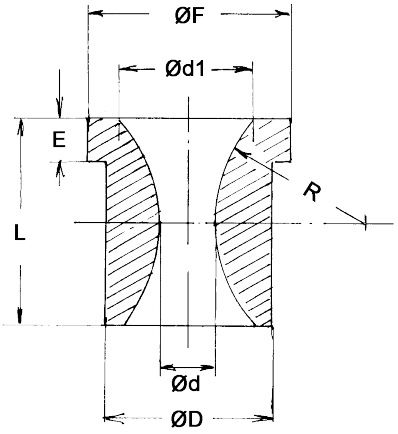

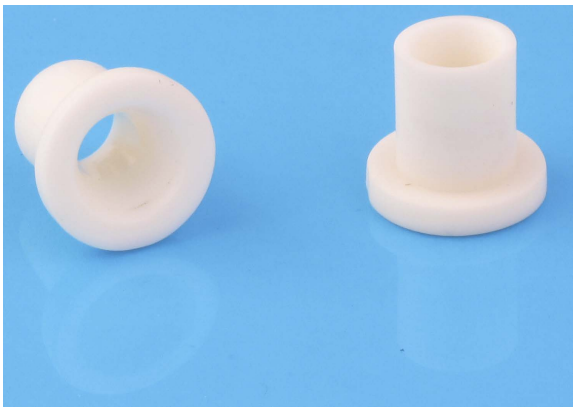

Article	Ød	Ød1	ØD	ØF	L	E	R	Spec.
05520*	4	7	7	10,5	10	2	9,1	99,5NXH
05060	5	12	16	20	20	4	15	95NH
04057	5,8	15	13	15,5	19	5	16	95NH

Reference see General Techn. Spec
* Stock item

Drawing No. 3-401223-00

Subec AB **Hesselmans Torg 5** **SE- 131 54 Nacka** **Sweden** **Phone: +46-8-88 46 33** **Email: info@subec.se** **Web: www.subec.se**

Copyright © 2026 Subec

CERAMIC GUIDE WITH FLANGE

Material	*CODE*	*95*	*99,5*	*99,8*	Al_2O_3 content %	ZrO_2	Zirconia
Surface Finishes		*N*	Normal finish r_a=1,0µm				
		D	Diamond Polish r_a=0,5µm				
Hardness		*H*	~1500HV			*XH*	~1800HV

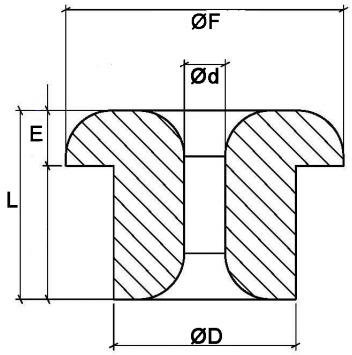

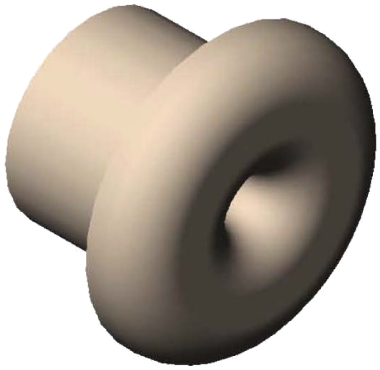

Article	Ød	ØD	ØF	L	E	Spec.
10075*	0,60	5,5	7,5	5	1,5	99,7NXH
06022*	0,5	4	6,1	4,1	1,2	95NH
08381*	0,65	5,5	7,5	5	1,5	99,7NXH
06021*	0,7	4	6,1	4,1	1,2	95NH
08382*	0,75	5,5	7,5	5	1,5	99,7NXH
08383*	0,85	5,5	7,5	5	1,5	99,7NXH
06020*	0,9	4	6,1	4,1	1,2	95NH
08386*	1,1	5,5	7,5	5	1,5	99,7NXH
08387*	1,15	5,5	7,5	5	1,5	99,7NXH
08388*	1,25	5,5	7,5	5	1,5	99,7NXH
08390*	1,45	5,5	7,5	5	1,5	99,7NXH
02932*	1,5	6,7	8,4	6,5	1,5	95NXH
08391*	1,55	5,5	7,5	5	1,5	99,7NXH
08392*	1,65	5,5	7,5	5	1,5	99,7NXH
08393*	1,75	5,5	7,5	5	1,5	99,7NXH
06351	1,9	4	6	4	1	95NH
08400*	2,45	5,5	7,5	5	1,5	99,7NXH
10064*	2,8	5,5	7,5	5	1,5	99,7NXH
07598	20,2	29,8	35	25	5	95NH

Reference see General Techn. Spec
* Stock item

Drawing No. 1-401223-00

Subec AB **Hesselmans Torg 5** **SE- 131 54 Nacka** **Sweden** **Phone: +46-8-88 46 33** **Email: info@subec.se** **Web: www.subec.se**

Copyright © 2026 Subec

CERAMIC GUIDE WITH FLANGE

Material	*CODE*	*95*	*99,5*	*99,8*	Al_2O_3 content %	ZrO_2	Zirconia
Surface Finishes		*N*	Normal finish r_a=1,0µm				
		D	Diamond Polish r_a=0,5µm				
Hardness		*H*	~1500HV			*XH*	~1800HV

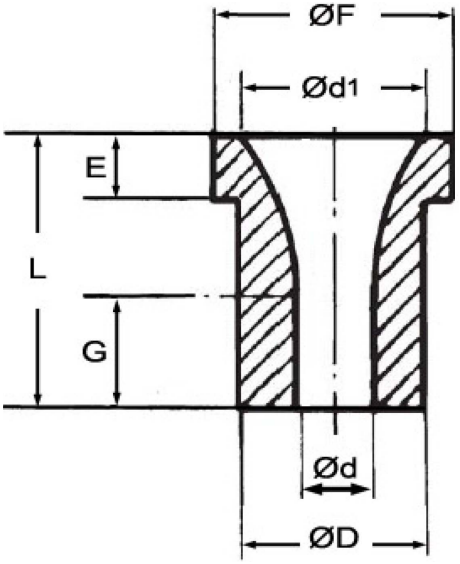

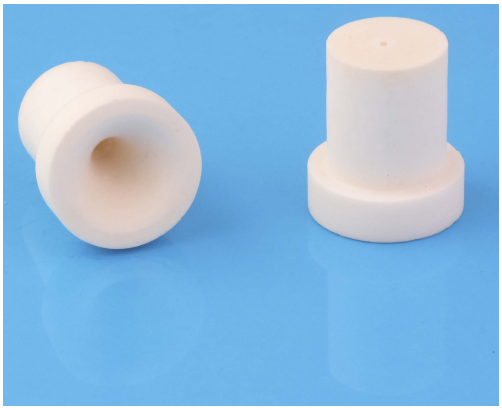

Article	Ød	Ød1	ØD	ØF	G	L	E	Spec.
06406*	0,3		3,95	5,8	3,06	4,06	1	99,5NXH
06405*	0,5		3,95	5,8	3,06	4,06	1	99,5NXH
06404*	0,75		3,95	5,8	3,06	4,06	1	99,5NXH
06614*	0,79	13	13	17	8	20	5	99,5NXH
06401*	0,9		3,95	5,8	3,06	4,06	1	99,5NXH
02856*	1,4	13	13	17	8	20	5	ZrO_2DXH
05930*	1,6		3,1	5		4	1,2	95NH
05928*	1,8		3,2	5		4	1,3	95NH
05913	1,8		6	8		7,1	4	95NH
02866	2,2	13	13	17	8	20	5	99,5NXH
04247*	3		4,8	6,8			1	95NXH
05929*	3		5	7		6,8	1,5	95NH
05914*	3		6	8		7,1	4	95NH
05862	3,2	10	10	17	50	63,5	5	99,5NHX
03703*	3,5		12,8	17		20	5	95NH
02872	3,6	13	13	17	8	20	5	95NH
05861	3,8	10	10	17	50	63,5	5	99,5NXH
09891*	4,0		9,9	13,7		11	5,9	99,5NXH
03704*	4,0		12,8	17		20	5	95NH
05860	4,5	10	10	17	50	63,5	5	99,5NXH
03705*	4,5		12,8	17		20	5	95NH

Reference see General Techn. Spec

Drawing No. 1-400880-00

* Stock item

Subec AB **Hesselmans Torg 5** **SE- 131 54 Nacka** **Sweden** **Phone: +46-8-88 46 33** **Email: info@subec.se** **Web: www.subec.se**

Copyright © 2026 Subec

CERAMIC GUIDE WITH FLANGE

Material	*CODE*	*95*	*99,5*	*99,8*	Al_2O_3 content %	ZrO_2	Zirconia
Surface Finishes		*N*	Normal finish r_a=1,0µm				
		D	Diamond Polish r_a=0,5µm				
Hardness		*H*	~1500HV			*XH*	~1800HV

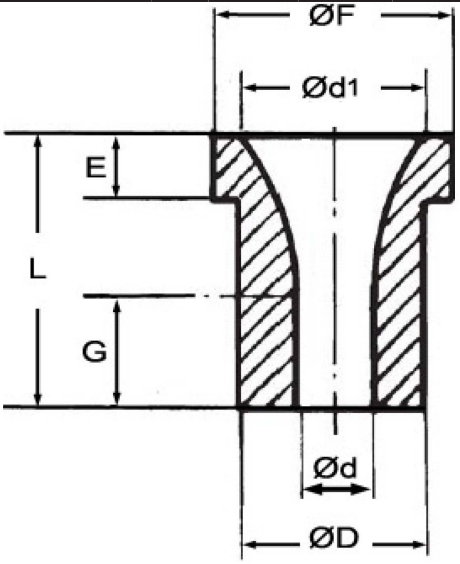

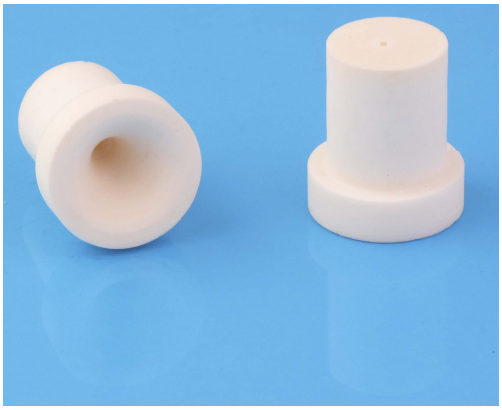

Article	Ød	Ød1	ØD	ØF	G	L	E	Spec.
05643*	4,9	13	13	17	8	20	5	99,5NXH
03706*	5		12,8	17		20	5	95NH
05644*	5,0	13	13	17	8	20	5	99,5NXH
05645*	5,1	13	13	17	8	20	5	99,5NXH
03707*	5,5		12,8	17		20	5	95NH
06468	6	11,5	12,2	16	8,3	15,3	2,5	99,5NXH
03708*	6		12,8	17		20	5	95NH
13964*	6,5		12,6	17		20	5	95NH
05382*	7	12,2	12,8	16,9		20	5	95NH
03512*	8	13,9	13,9	20	8	17	5	95NH
12211	20	30	30	35	10	22	7	99,7DXH
15305*	24	35	35	40	10	22	7	99,7DXH
15309*	51	62	60	65	10	22	7	99,7DXH

Reference see General Techn. Spec
* Stock item

Drawing No. 1-400880-00

Subec AB **Hesselmans Torg 5** **SE- 131 54 Nacka** **Sweden** **Phone: +46-8-88 46 33** **Email: info@subec.se** **Web: www.subec.se**

Copyright © 2026 Subec

CERAMIC TUBE

Material	CODE	95	99,5	99,8	Al_2O_3 content %	ZrO_2	Zirconia
Surface Finishes		N	Normal finish r_a=1,0µm				
		D	Diamond Polish r_a=0,5µm				
Hardness		H	~1500HV			XH	~1800HV

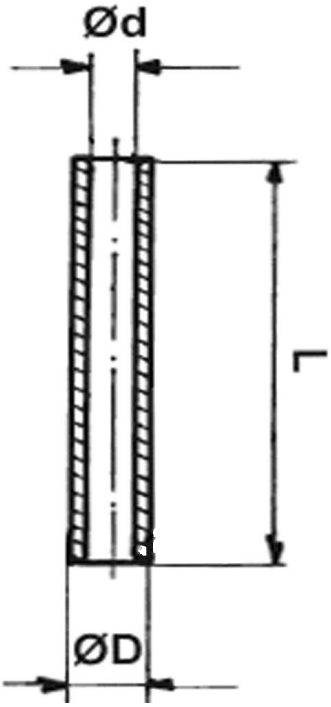

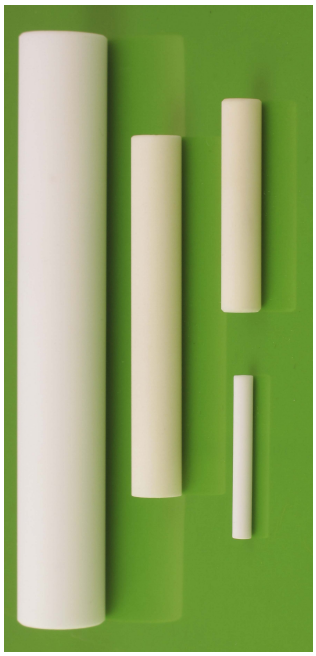

Article	Ød	ØD	L	Spec.
04507*	1	3	25	95NH
06965*	1,1	2,3	18	99,5NXH
06232	2	3	10	99,5NXH
07168*	2	4	12	95NH
08740*	2	4	20	95NH
06530*	3,3	5	15	95NH
02627*	3,5	6	65	95NH
03148*	3,5	6	25	95NXH
13299*	3,5	6	40	99,5NXH
13371*	3,5	6	85	99,NXH
02626*	3,5	6	32	95NH
05354*	5,1	7	35	95NH
11299*	5,1	7	40	99,8NXH
07396*	5,1	7	50	95NH
08308*	5,1	7	50	99,5NXH
05090*	5,1	7	70	95NH
05152*	5,1	8	50	95NH
07378*	5,1	8	80	95NH
06766*	5,2	8	20	95NH
10282*	5,5	10	45	99,5NXH
10281*	5,5	10	55	99,5NXH
10280*	5,5	10	200	99,5NXH
03155	5,5	10	200	95NH
08190*	5,6	12	140	95NH
10500*	6	10	30,5	95NH
05172*	6,3	10	50	95NXH
12598*	6,35	12,7	48,25	99,8NXH
11744*	6,5	10	40	95NH

Reference see General Techn. Spec
* Stock item

Drawing No. 1-400881-00

Subec AB **Hesselmans Torg 5** **SE- 131 54 Nacka** **Sweden** **Phone: +46-8-88 46 33** **Email: info@subec.se** **Web: www.subec.se**

Copyright © 2026 Subec

CERAMIC TUBE

Material	CODE	95	99,5	99,8	Al_2O_3 content %	ZrO_2	Zirconia
Surface Finishes		N	Normal finish r_a=1,0µm				
		D	Diamond Polish r_a=0,5µm				
Hardness		H	~1500HV			XH	~1800HV

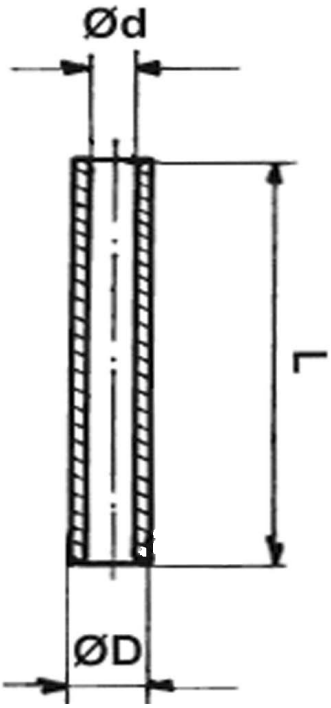

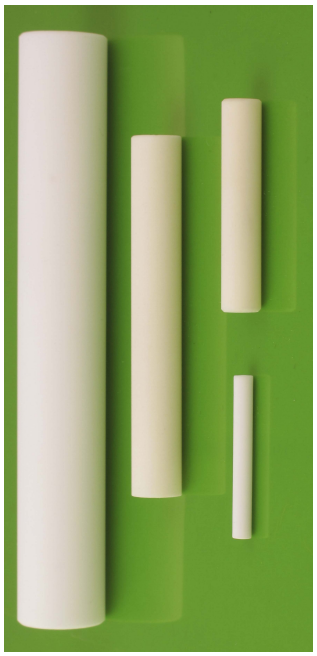

Article	Ød	ØD	L	Spec.
11392*	6,5	10	60	99,5NXH
12597*	6,5	10	70	95NH
06515*	6,5	10	100	95NXH
04039*	7,3	11	140	99,5NXH
12887*	7,5	12	72	95NH
05625*	8,2	15	250	95NH
06803*	8,3	12	60	95NH
10897*	8,3	15	60	99,7NXH
07010*	8,3	15	100	95NH
10898*	8,3	15	120	99,7NXH
04132*	8,3	15	130	95NH
10899*	8,3	15	180	99,7NXH
05528*	9,85	14,75	88	95NXH
06638	10	16	300	99,5NXH
05442*	10,3	15	100	95NH
04244	12	22	100	99,5NXH
05499*	13	20	80	95NH
12188*	16,5	25	144	99,8NXH
12685*	18	20,4	29	99,8NXH
09926*	20	25	500	95NXH
07904*	25-27	33	1100	99,5NXH
07036*	27,5	32	465	95NXH
06541*	34	40	76	95NXH

Reference see General Techn. Spec
* Stock item

Drawing No. 1-400881-00

Subec AB **Hesselmans Torg 5** **SE- 131 54 Nacka** **Sweden** **Phone: +46-8-88 46 33** **Email: info@subec.se** **Web: www.subec.se**

Copyright © 2026 Subec

WELDING TUBE

Material	Cordierite

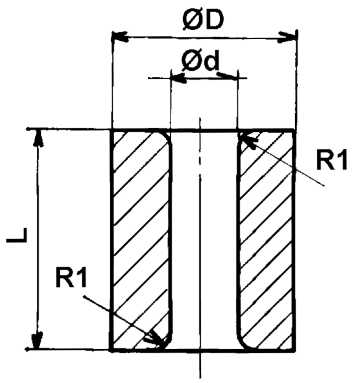



Article	Ød	ØD	L
08243	0,9	6	10
08244	0,95	6	10
07348*	1	6	8
10278*	1,15	6	8
09678	1,2	6	8
08246	1,2	6	10
08247	1,3	6	10
07913	1,3	7,4	10
09679	1,4	6	8
08248	1,6	7	10
09680	1,7	6	8
07914	1,7	7	10
08249	2,1	7	10
08241	2,6	8	10
09681	2,8	8	10
08242	3,2	10	10
08250	3,2	15	20
09682	3,3	10	12
08251	3,5	10	20
14099	4,32-4,45 (0.170-0.175”)	12,7 (1/2”)	12,7 (1/2”)
08252	4,5	12	20
14100	5,46-5,59 (0.215-0.220”)	15,88 (5/8”)	12,7 (1/2”)
14101	6,99 - 7,11 (0.275-0.280”)	19,05 (3/4”)	12,7 (1/2”)

Reference see General Techn. Spec
* Stock item

Drawing No. 3-401199-00

Subec AB **Hesselmans Torg 5** **SE- 131 54 Nacka** **Sweden** **Phone: +46-8-88 46 33** **Email: info@subec.se** **Web: www.subec.se**

Copyright © 2026 Subec

CERAMIC CONICAL EYELET

Material	*CODE*	*95*	*99,5*	*99,8*	Al_2O_3 content %	ZrO_2	Zirconia
Surface Finishes		*N*	Normal finish r_a=1,0µm				
		D	Diamond Polish r_a=0,5µm				
Hardness		*H*	~1500HV			*XH*	~1800HV

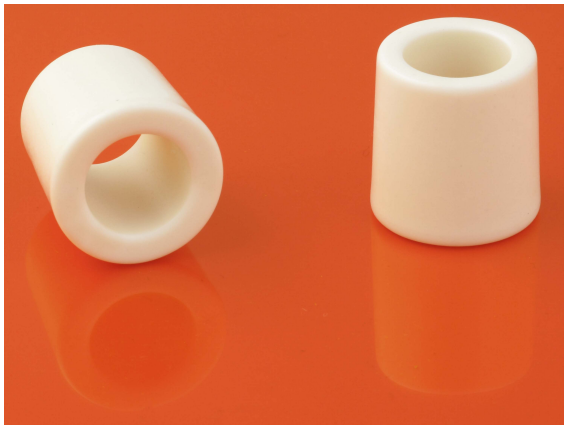

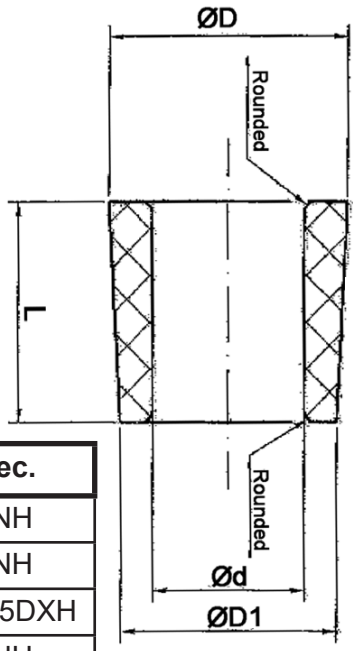

Article	Ød	ØD	ØD1	L	Spec.
06744*	1,8	5	4,5	10	95NH
05138*	4	10	9,4	12	95NH
05723*	4	10,3	9,8	12	99,5DXH
06681*	4,5	16	15,5	20	95NH
02803*	5	10	8,5	15	95NH
07310*	5,5	8,5	8,0	5,0	95NH
03080*	6	10	9,4	12	95NH
03779*	6	10	8,7	15,3	95NXH
07295*	6	11,5	10	15	95NH
06411	6	14	12	16	95NH
04095*	7	12	11,4	12	95NH
05922	7	12	11,5	12	95NH
05921	7	15	13	18	95NH
06729	8	15	14	16	95NH
05295*	8	15,6	14	18	95NH
12180*	8	16	15,2	16	95NH
04767	10	18	17	15,7	95NH
04022*	12	20	18	20	95NH
07451*	12	20	19	18	95DH
05043*	12	20	19	18	95NXH

Reference see General Techn. Spec
* Stock item

Drawing No. 1-400879-00

Subec AB **Hesselmans Torg 5** **SE- 131 54 Nacka** **Sweden** **Phone: +46-8-88 46 33** **Email: info@subec.se** **Web: www.subec.se**

Copyright © 2026 Subec

CERAMIC CONICAL EYELET

Material	*CODE*	*95*	*99,5*	*99,8*	Al_2O_3 content %	ZrO_2	Zirconia
Surface Finishes		*N*	Normal finish r_a=1,0µm				
		D	Diamond Polish r_a=0,5µm				
Hardness		*H*	~1500HV			*XH*	~1800HV

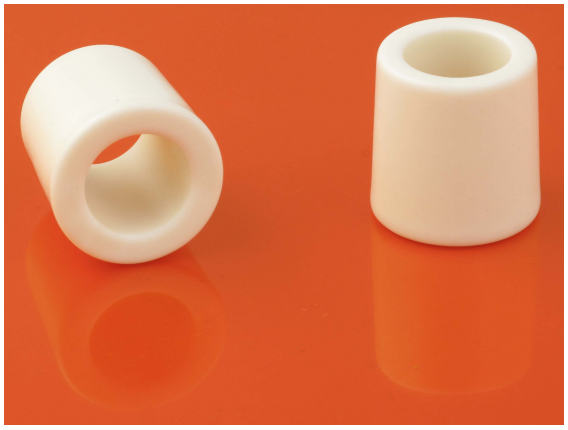

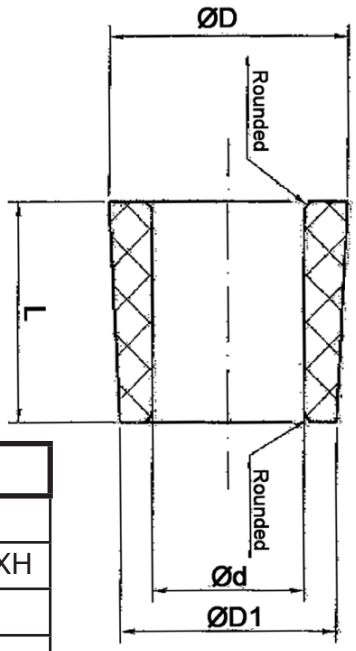

Article	Ød	ØD	ØD1	L	Spec.
03791*	14	22	20	20	95NH
05555	14	22	20	20	99,5DXH
03762*	16	23	21	20	95NH
07252*	18	37	36	18	95NH
07204*	20	28	27	20	95NH
06940*	20	30	28,9	22	95NH
12282*	33	49	44	39	95NH

Reference see General Techn. Spec
* Stock item

Drawing No. 1-400879-00

Subec AB **Hesselmans Torg 5** **SE- 131 54 Nacka** **Sweden** **Phone: +46-8-88 46 33** **Email: info@subec.se** **Web: www.subec.se**

Copyright © 2026 Subec

CERAMIC CONICAL EYELET

Material	*CODE*	*95*	*99,5*	*99,8*	Al_2O_3 content %	ZrO_2	Zirconia
Surface Finishes		*N*	Normal finish r_a=1,0µm				
		D	Diamond Polish r_a=0,5µm				
Hardness		*H*	~1500HV			*XH*	~1800HV

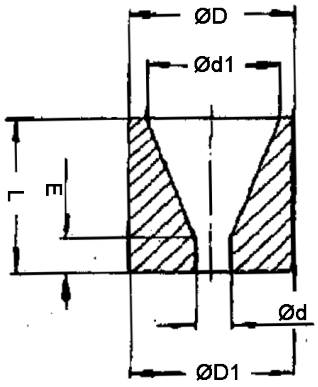

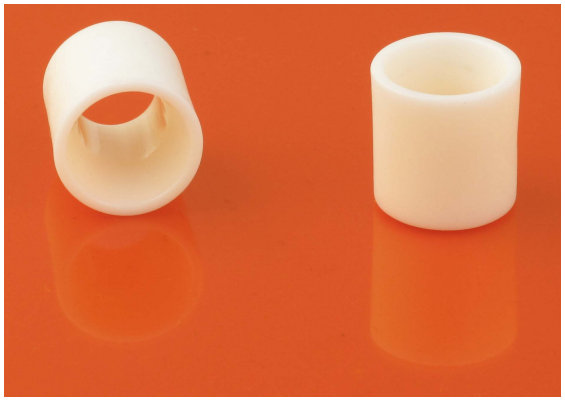

Article	Ød	ØD	ØD1	Ød1	L	E	Spec.
06954*	2	6	6	5	8	2,5	95NH
05359*	4,5	11	10,5	9	11	5	95NH
07115*	4,5	12	12	9	8	2,25	95NH
06013*	5	11	10,5	9	11	5,5	95NH
05357*	5,8	11	10,5	9	11	6,3	95NH
05358*	6	11	10,5	9	11	6,5	95NH
05405*	6,5	11	10,5	9	11	7	95NH

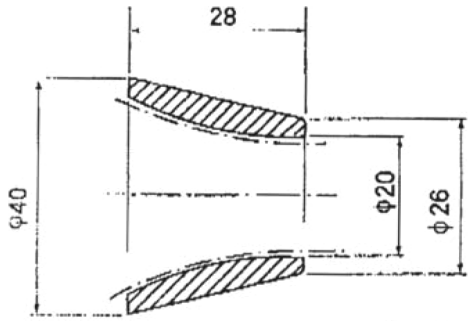

99,5NXH
Article: 05954*

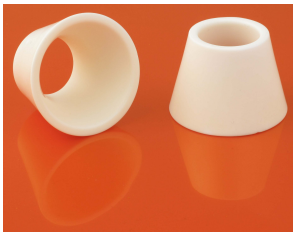

Reference see General Techn. Spec
* Stock item

Drawing No. 1-400877-00

Subec AB **Hesselmans Torg 5** **SE- 131 54 Nacka** **Sweden** **Phone: +46-8-88 46 33** **Email: info@subec.se** **Web: www.subec.se**

Copyright © 2026 Subec

CERAMIC ROD

Material	CODE	*95*	*99,5*	*99,8*	Al_2O_3 content %	ZrO_2	Zirconia
Surface Finishes		*N*	Normal finish r_a=1,0µm				
		D	Diamond Polish r_a=0,5µm				
Hardness		*H*	~1500HV			*XH*	~1800HV

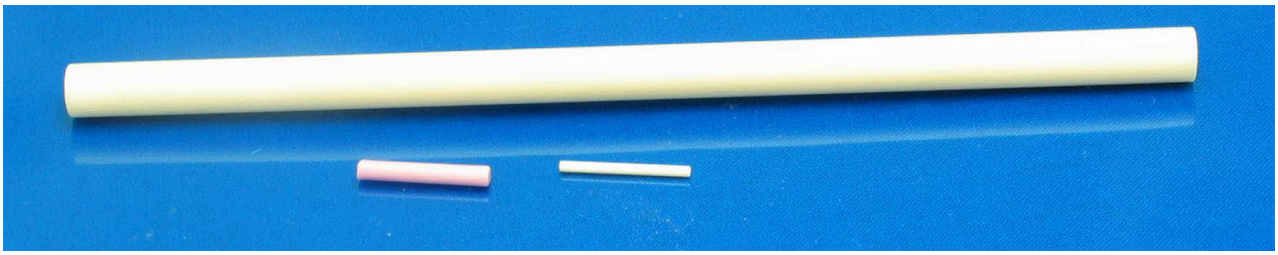

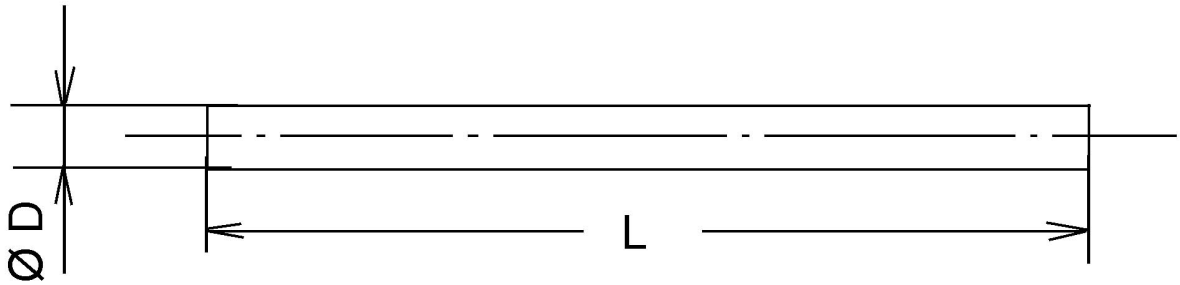

Article	ØD	L	Spec.
06855*	3	40	99,5NH
06856*	3	60	99,5NH
05690*	4	33	95NXH
00457*	4	72	99,7DXH
05419*	4	100	95NXH
06833*	5	10	99,5DXH
06834*	5	15	99,5DXH
06835*	5	20	99,5DXH
05514*	5	35	95NXH
10273	6	25	99,5NXH
03975*	6	60	95NH
10232*	6	65	99,5NXH
03314*	7	50	95NH
17621	8	25	99,8NXH
7655*	8	35	99,8NXH
06469*	8	45	99,5NXH
11724*	8	50	99,8NXH
10272*	8	70	99,5NXH

Article	ØD	L	Spec.
18532*	8	150	99NXH
06412	8	160	95NXH
06836*	8	200	99,5NH
09028*	8	240	95NXH
03082*	8	170	95NH
06413	8	300	95NH
05221*	10	120	99,5NXH
10271*	12	30	99,5NXH
03820*	12	80	99,5NXH
03819*	12	150	95NH
10274*	16	55	99,5NXH
06470	20	317,5	99,5NXH
06023*	25	500	99,5NXH

Reference see General Techn. Spec
* Stock item

Drawing No. 1-400638-00

Subec AB **Hesselmans Torg 5** **SE- 131 54 Nacka** **Sweden** **Phone: +46-8-88 46 33** **Email: info@subec.se** **Web: www.subec.se**

Copyright © 2026 Subec

CERAMIC ROLLER

Material	CODE	95	99,5	99,8	Al_2O_3 content %	ZrO_2	Zirconia
Surface Finishes		N	Normal finish r_a=1,0µm				
		D	Diamond Polish r_a=0,5µm				
Hardness		H	~1500HV			XH	~1800HV

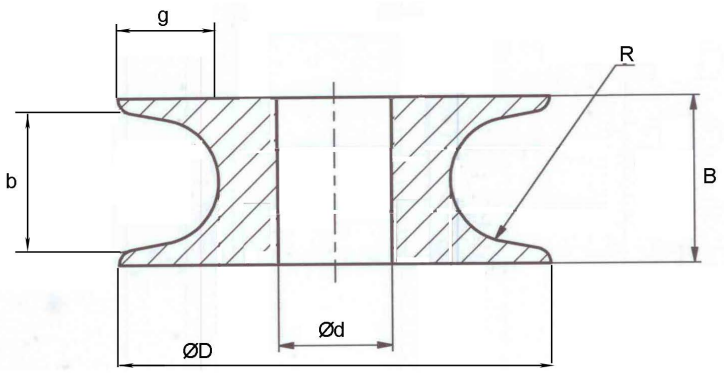



Article	ØD	Ød	B	b	R	g	Spec.
05194*	11,75	5,25	10,8	10,8	8	2	95NH
06867*	16	6	8	6	3	3	95NH
05751	30	8	12	11,3	6	4	99,5NXH
14156	30	15	8	6	3	3,5	99,8NXH
05789	38	28	12	8	4	4	95NH
03831*	40	10	13	10	5	5	95NH
05287	80	10	20	8	4	10	99,5NXH

Article 6418, 5276 for bearing 627/6-2Z

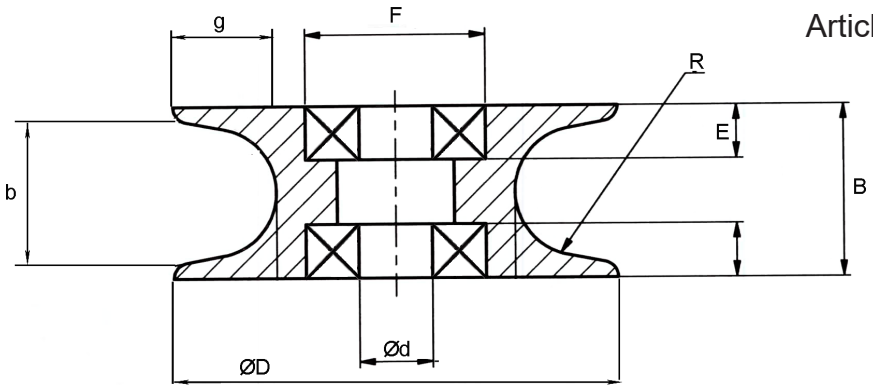

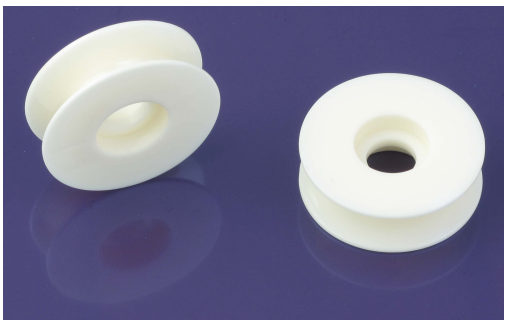

Article	ØD	Ød	F	E	B	b	R	g	Spec.
06418*	24,5	6,5	10	3,2	8	6,6	2,5	5,4	99,5NXH
05276*	24,7	6,5	10	3,2	9,6	9	3,6	5,7	99,5DXH
16930	30	10,5	11	3,2	19	15	3,6	5,7	99,5DXH

Reference see General Techn. Spec
* Stock item

Subec AB **Hesselmans Torg 5** **SE- 131 54 Nacka** **Sweden** **Phone: +46-8-88 46 33** **Email: info@subec.se** **Web: www.subec.se**

Copyright © 2026 Subec

CERAMIC ROLLER

Material	CODE	95	99,5	99,8	Al_2O_3 content %	ZrO_2	Zirconia
Surface Finishes		N	Normal finish r_a=1,0µm				
		D	Diamond Polish r_a=0,5µm				
Hardness		H	~1500HV			XH	~1800HV

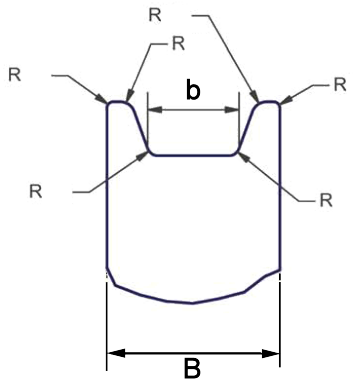

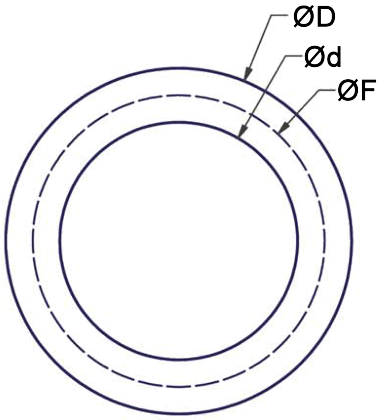

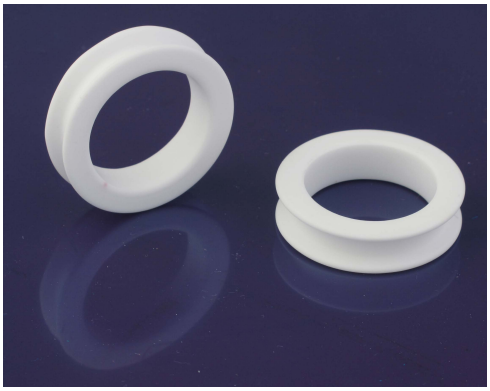

Article	ØD	Ød	ØF	B	b	Spec.
05895*	32	22	27	8	4	95NH

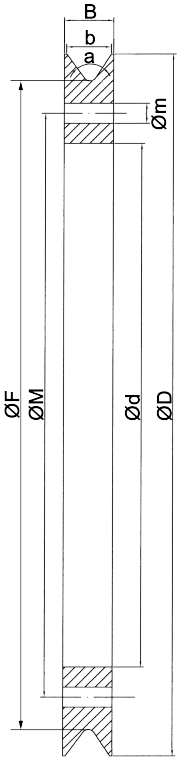

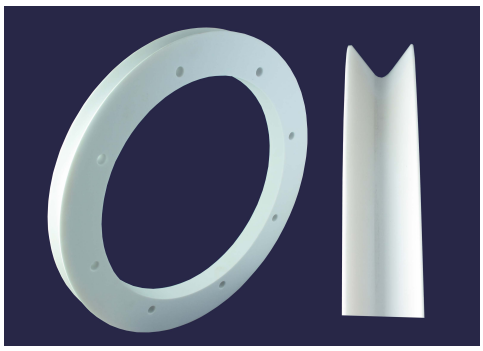

Article	ØD	Ød	ØF	ØM	Øm	B	b	a	Spec.
06821*	315	235	293,75	262	9	22	20	70°	95NH

Reference see General Techn. Spec
* Stock item

Subec AB **Hesselmans Torg 5** **SE- 131 54 Nacka** **Sweden** **Phone: +46-8-88 46 33** **Email: info@subec.se** **Web: www.subec.se**

Copyright © 2026 Subec

CERAMIC ROLLER

Material	CODE	*95*	*99,5*	*99,8*	Al_2O_3 content %	ZrO_2	Zirconia
Surface Finishes		*N*	Normal finish r_a=1,0µm				
		D	Diamond Polish r_a=0,5µm				
Hardness		*H*	~1500HV			*XH*	~1800HV

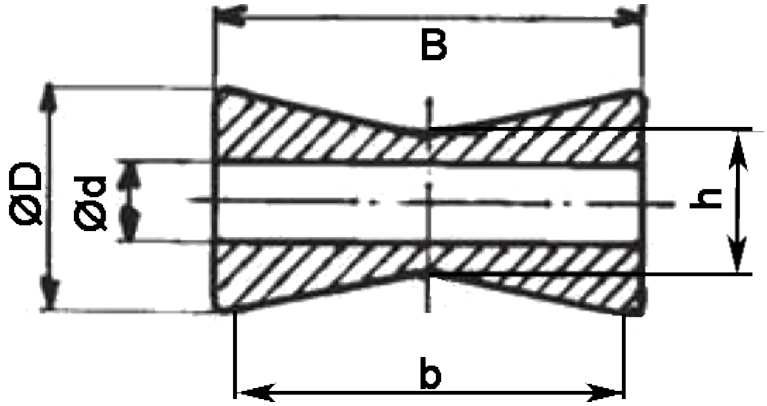

Ceramic Rollers with bearings see “Sleeve Rollers” in chapter 6.



Article	ØD	Ød	B	b	h	Spec.
05149	20	9	10	10		95NH
02930A*	20	6,5	25	25	10,6	95NH
05566	20	7,25	20	20		95NH
08840 *	35	10	75	70,7	20,7	95NH
06939	40	30	15,9	5		95NH
06770*	45	10	60	60	30	95NH

Other groove geometries on request

Reference see General Techn. Spec
* Stock item

Subec AB **Hesselmans Torg 5** **SE- 131 54 Nacka** **Sweden** **Phone: +46-8-88 46 33** **Email: info@subec.se** **Web: www.subec.se**

Copyright © 2026 Subec

CERAMIC ROLLER

Material	CODE	95	99,5	99,8	Al_2O_3 content %	ZrO_2	Zirconia
Surface Finishes		N	Normal finish r_a=1,0µm				
		D	Diamond Polish r_a=0,5µm				
Hardness		H	~1500HV			XH	~1800HV

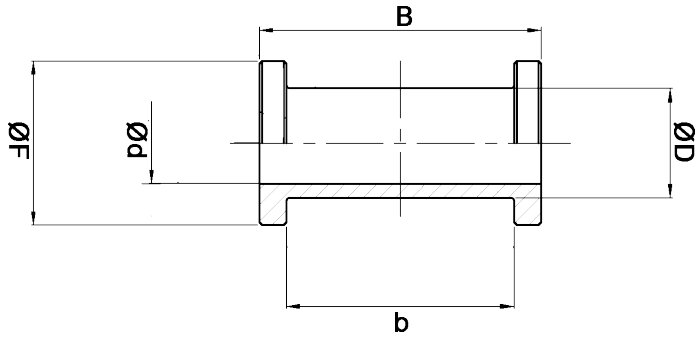



Article	ØD	Ød	ØF	B	b	Spec.
06761	12	9	18	31	25	99,5NH
07018*	15	10	30	37	31	95NH
05565	22	8	30	10	5	99NH

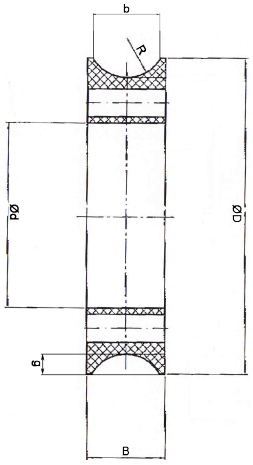



With holes for mounting of aluminum flanges

Article	ØD	Ød	B	b	R	g	Spec.
06780*	63	37	16	13,9	8	4	95NH
06522*	64	37	16	8	4	4,5	95NH

Reference see General Techn. Spec
* Stock item

Subec AB **Hesselmans Torg 5** **SE- 131 54 Nacka** **Sweden** **Phone: +46-8-88 46 33** **Email: info@subec.se** **Web: www.subec.se**

Copyright © 2026 Subec

CERAMIC GUIDE WITH GROOVE



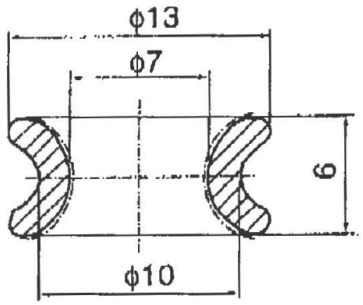

95NH
Article: 04472*

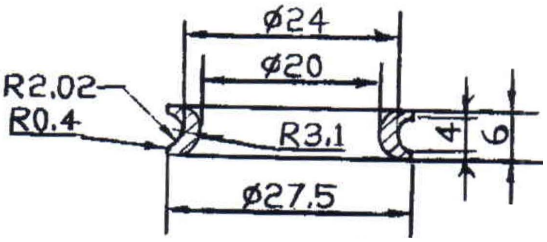

95NH
Article: 03719

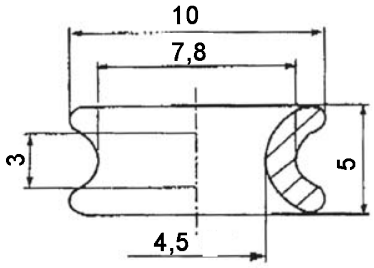

95NH
Article: 06353*

Reference see General Techn. Spec
* Stock item

Subec AB **Hesselmans Torg 5** **SE- 131 54 Nacka** **Sweden** **Phone: +46-8-88 46 33** **Email: info@subec.se** **Web: www.subec.se**

Copyright © 2026 Subec

CERAMIC GUIDE WITH FLANGE

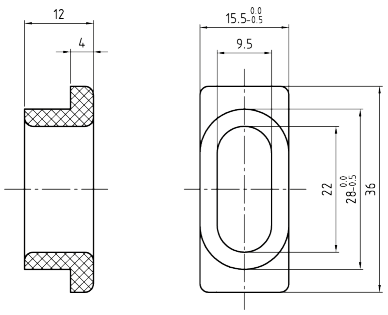

99,5NXH
Article: 05512*

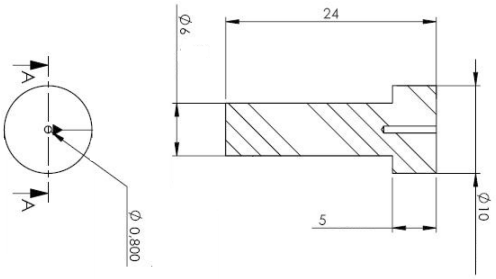

95NH
Article: 04957

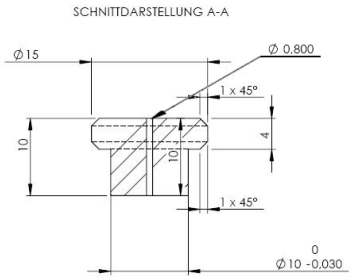

95NH
Article: 04958

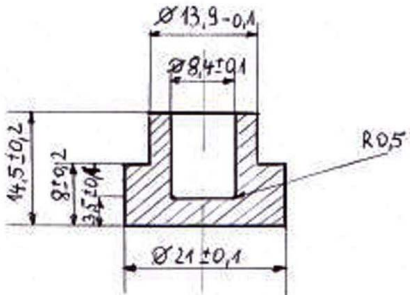

95NH
Article: 05365*

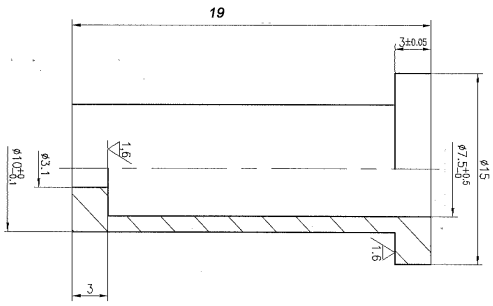

95NH
Article: 04854*

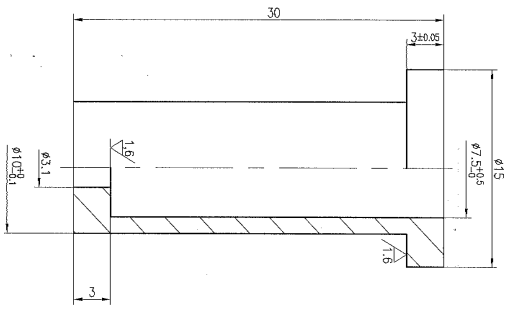

95NH
Article: 04059*

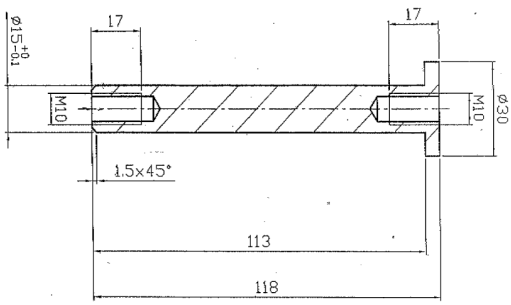

99,5NXH
Article: 04082

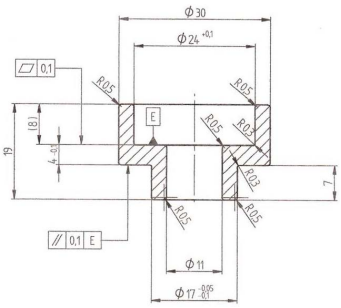

99,5NXH
Article: 05939*

Reference see General Techn. Spec
* Stock item

Subec AB **Hesselmans Torg 5** **SE- 131 54 Nacka** **Sweden** **Phone: +46-8-88 46 33** **Email: info@subec.se** **Web: www.subec.se**

Copyright © 2026 Subec

CERAMIC GUIDE WITH FLANGE

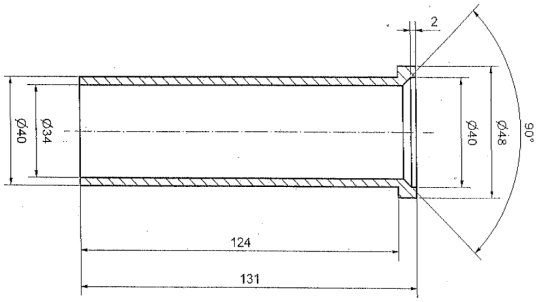

95NH
Article: 04083*

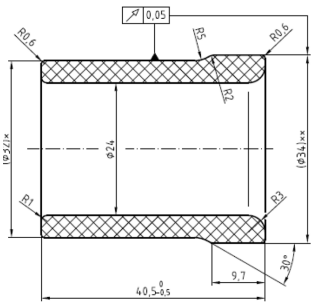

99,5NXH
Article: 06384

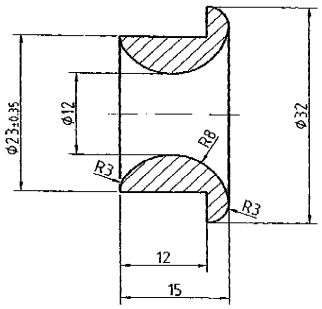

95NH
Article: 04023*

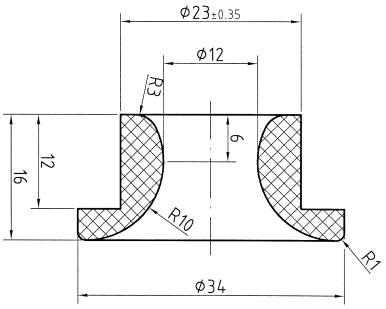

99,5DXH
Article: 04392*, not polished 7264*

Reference see General Techn. Spec
* Stock item

Subec AB
Hesselmans Torg 5
SE- 131 54 Nacka
Sweden
Phone: +46-8-88 46 33
Email: info@subec.se
Web: www.subec.se

Copyright © 2026 Subec

CERAMIC GUIDE WITH DOUBLE FLANGE

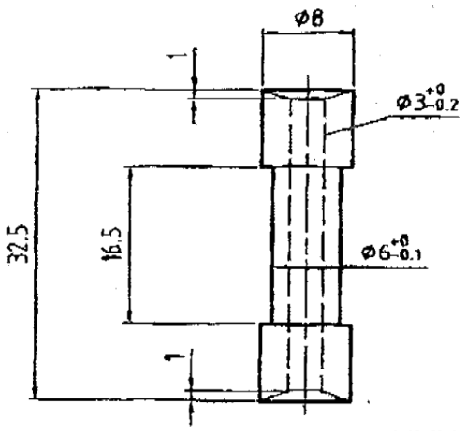

99,5NXH
Article: 04038*



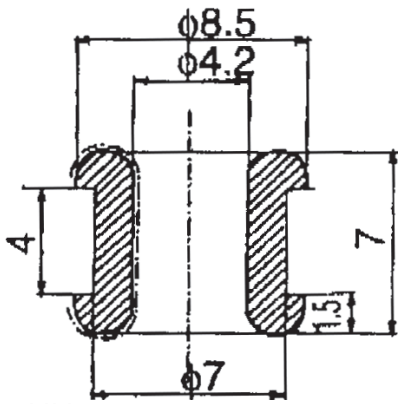

95NH
Article: 04997*

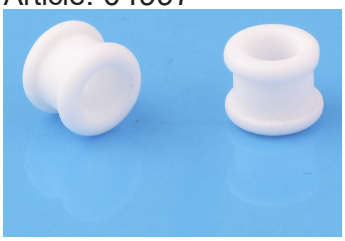

95NH
Article: 05919

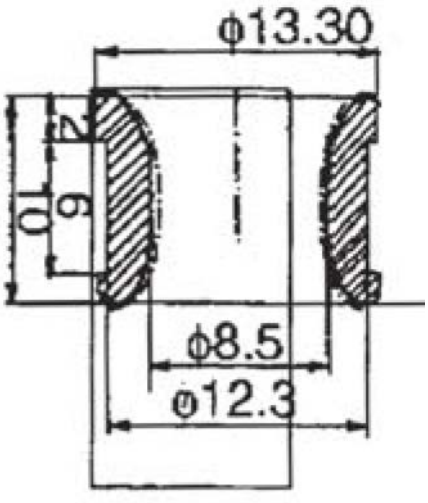

Al_2O_3, 97% purity, pink
Article: 04034

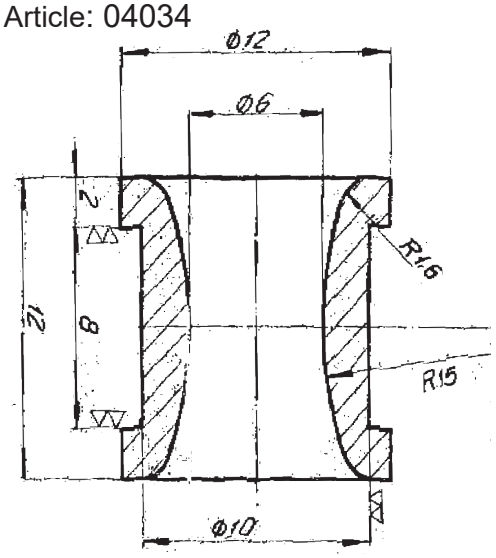

Reference see General Techn. Spec
* Stock item

Subec AB
Hesselmans Torg 5
SE- 131 54 Nacka
Sweden
Phone: +46-8-88 46 33
Email: info@subec.se
Web: www.subec.se

Copyright © 2026 Subec

CERAMIC BOW GUIDES

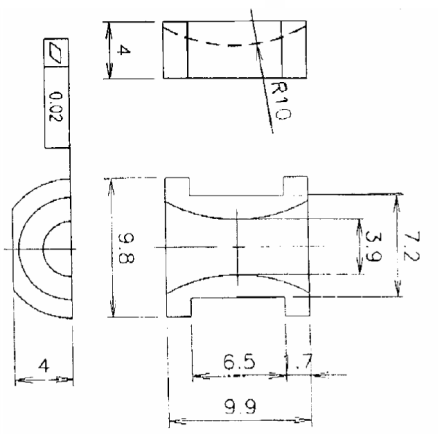

99,5NXH
Article: 02558*



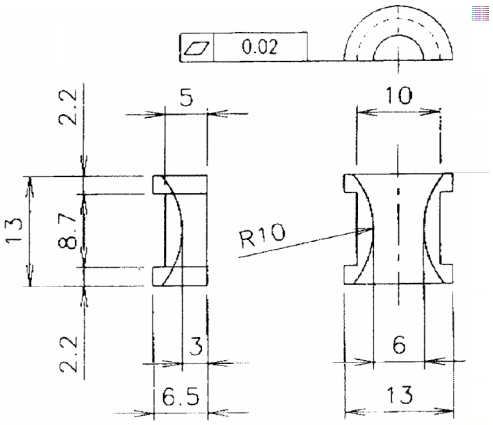

97NXH
Article: 02561*





99,5NXH
Article: 02562*

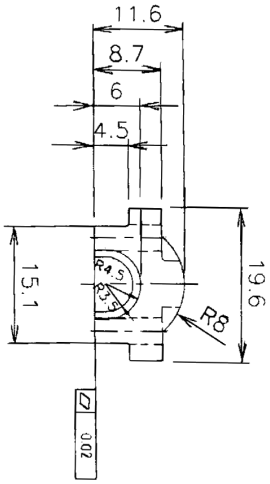

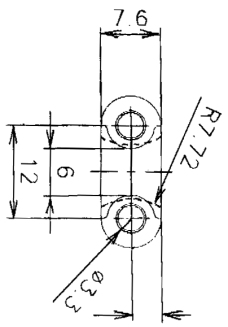



99,5NXH
Article: 02897*

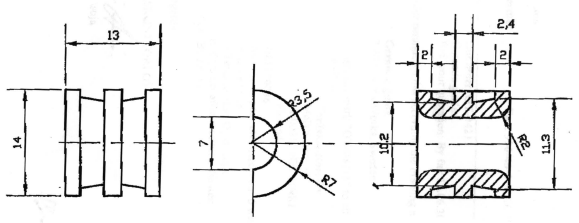

Reference see General Techn. Spec

Drawing No. 3-400575-00

* Stock item

Subec AB **Hesselmans Torg 5** **SE- 131 54 Nacka** **Sweden** **Phone: +46-8-88 46 33** **Email: info@subec.se** **Web: www.subec.se**

Copyright © 2026 Subec

CERAMIC BOW GUIDES

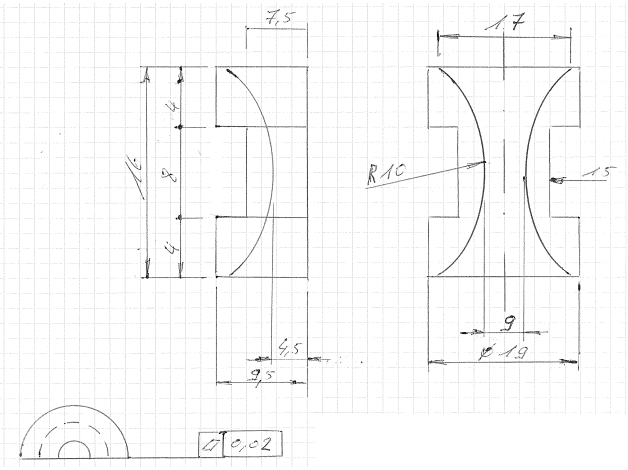

99,5NXH
Article: 05175*



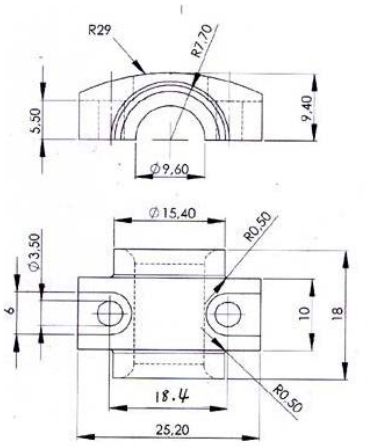

99,5NXH
Article: 05829*



99,5NXH
Article: 06025

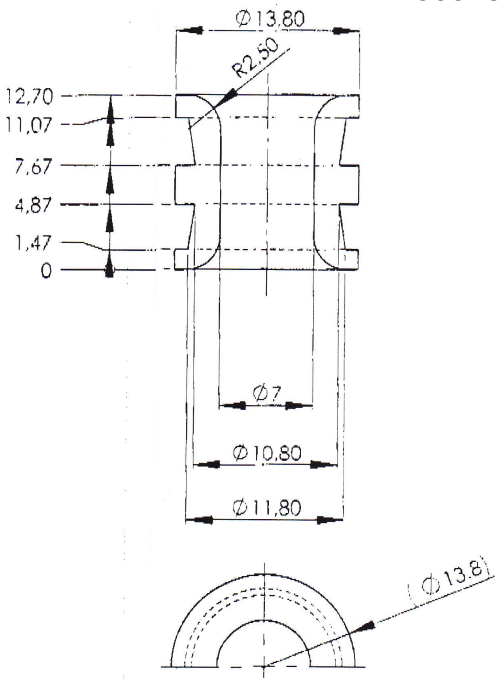

99,5NXH
Article: 06144

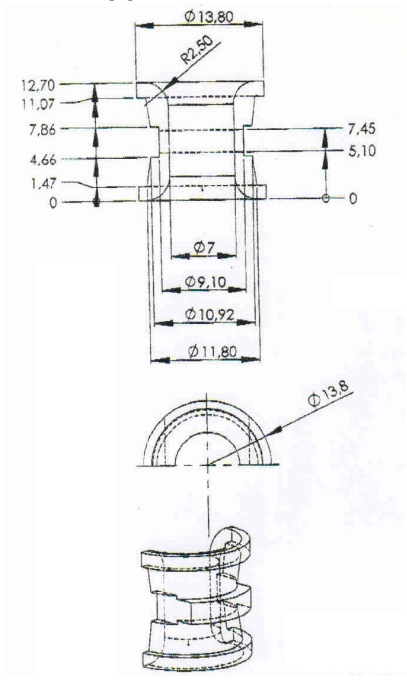

Reference see General Techn. Spec
* Stock item

Drawing No. 3-400575-00

Subec AB **Hesselmans Torg 5** **SE- 131 54 Nacka** **Sweden** **Phone: +46-8-88 46 33** **Email: info@subec.se** **Web: www.subec.se**

Copyright © 2026 Subec

CERAMIC BOW GUIDES

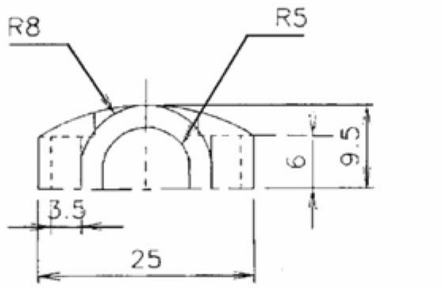

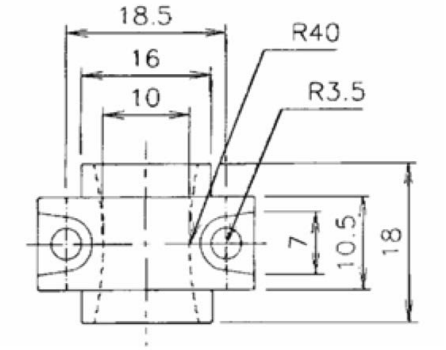

99,5NXH
Article: 02556

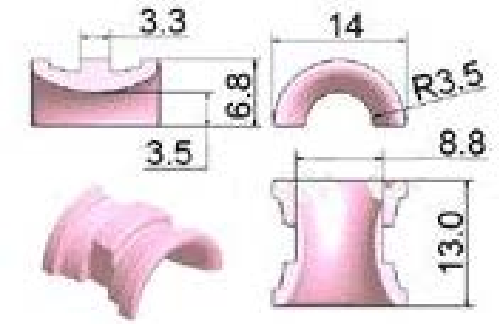

99,5NXH
Article: 06636

99,5NXH
Article: 02557

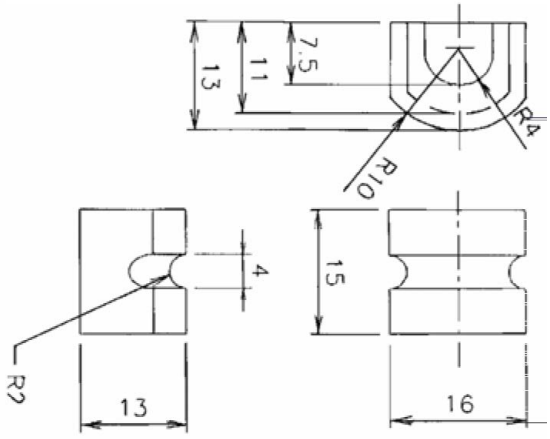

Al_2O_3, 97% purity, pink
Article: 02560

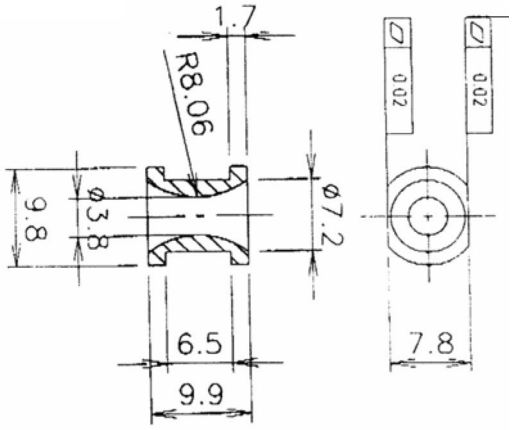

Reference see General Techn. Spec

Drawing No. 3-400575-00

Subec AB **Hesselmans Torg 5** **SE- 131 54 Nacka** **Sweden** **Phone: +46-8-88 46 33** **Email: info@subec.se** **Web: www.subec.se**

Copyright © 2026 Subec

CUSTOM MADE CERAMICS

Article: 06407*, 06408* Jet nozzle

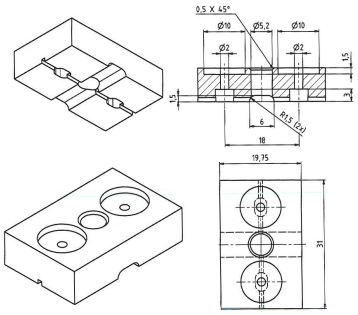

95NXH
Article: 04583* Tapered tube

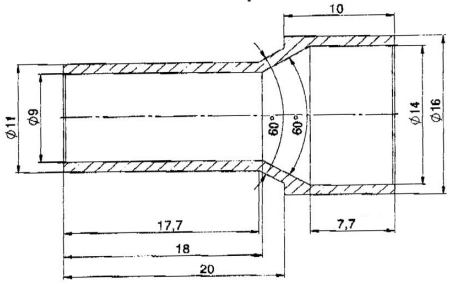

95NH
Article: 03966* Threaded guide 10-32UNF

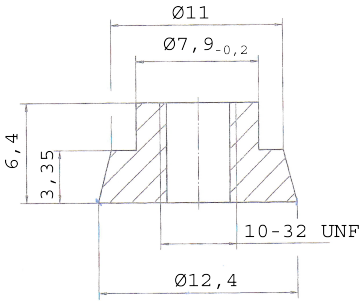

95NXH
Article: 05026-05030* Half guide

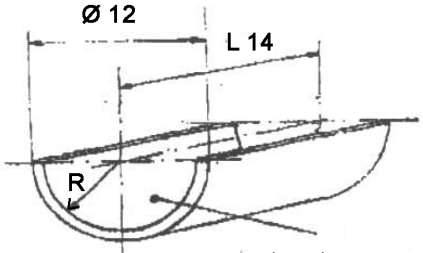

R = 1,5-5mm Surface inside polished

95NH
Article: 03967* Threaded guide 5/16-32 UNF

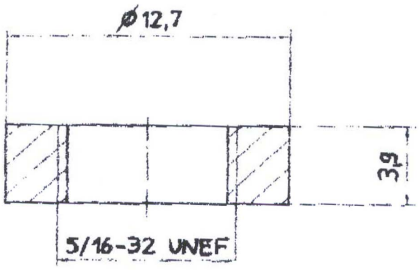

99,5NXH
Article: 06031* Plate

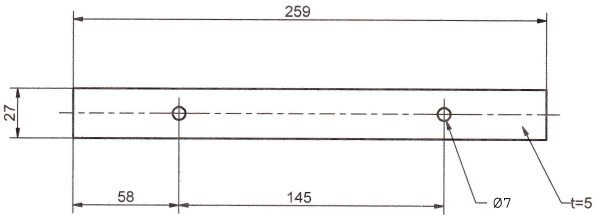

95NXH
Article: 04528* Threaded guide

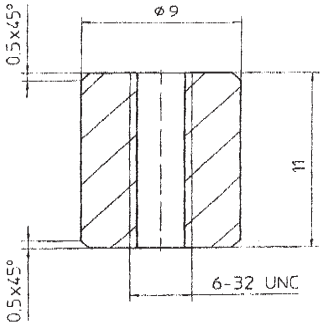

95NXH
Article: 05627*

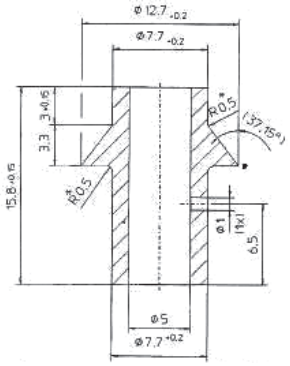

Reference see General Techn. Spec
* Stock item

Subec AB
Hesselmans Torg 5
SE- 131 54 Nacka
Sweden
Phone: +46-8-88 46 33
Email: info@subec.se
Web: www.subec.se

Copyright © 2026 Subec

CUSTOM MADE CERAMICS

99,5NXH
Article: 05920 Rod with groove

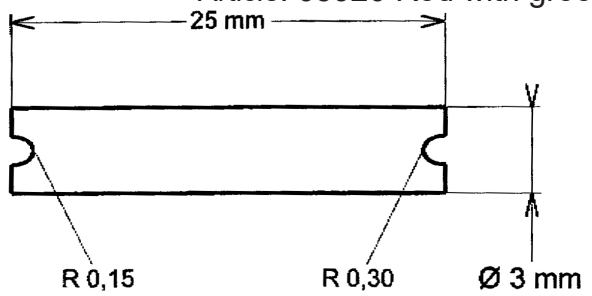

95NXH
Article: 04473 Rod with threaded ends

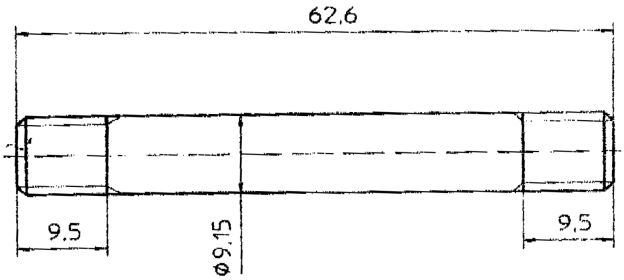

95NH
Article: 04600* Tube with cap, tapered end

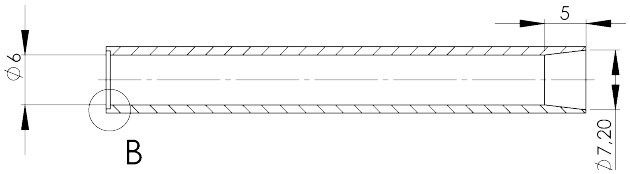

95NH
Article: 05666 Tube with tapered end

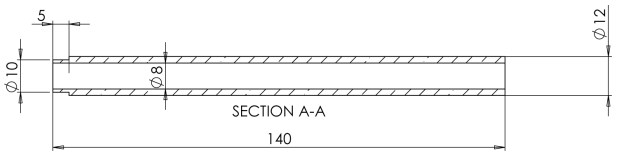

95NH
Article: 05085*

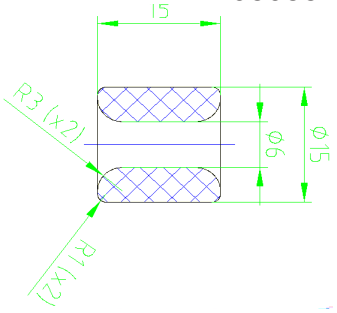

95NH
Article: 05805* Coil foot

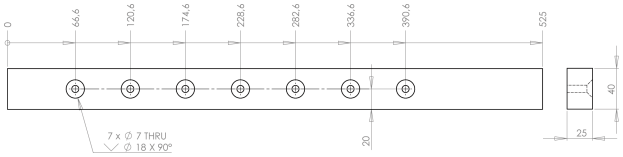

95NXH
Article: 04410*

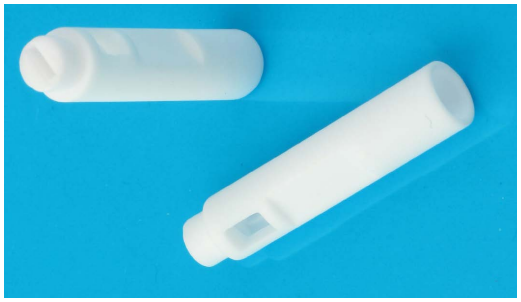

95NXH
Article: 04892* closed end tube



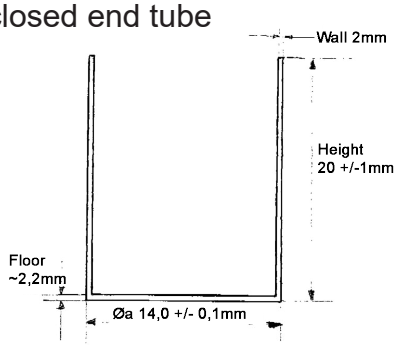

Reference see General Techn. Spec
* Stock item

Subec AB
Hesselmans Torg 5
SE- 131 54 Nacka
Sweden
Phone: +46-8-88 46 33
Email: info@subec.se
Web: www.subec.se

Copyright © 2026 Subec

CUSTOM MADE CERAMICS

H and U Distance holder
Article: 03990* and 03992*

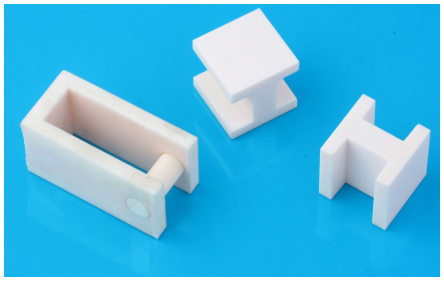

95NXH
Article: 05072*



99,5NXH
Article: 03702* Threaded guide



95NXH
Article: 05894* Drive roller

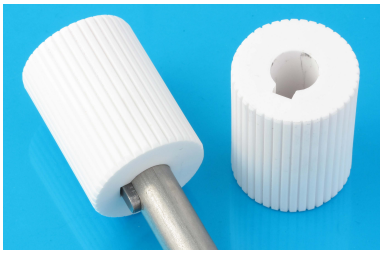

99,5NXH
Article: 03870*

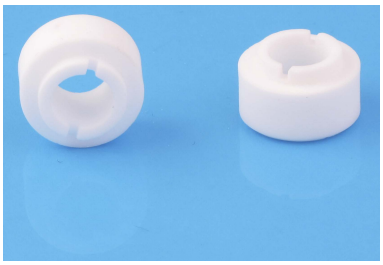

95NXH
Article: 05284* cone end tube



99,5NXH
Article: 04277* threaded 10-32UNF



95NXH
Article: 05439* closed end tube



Reference see General Techn. Spec
* Stock item

Subec AB **Hesselmans Torg 5** **SE- 131 54 Nacka** **Sweden** **Phone: +46-8-88 46 33** **Email: info@subec.se** **Web: www.subec.se**

Copyright © 2026 Subec

CUSTOM MADE CERAMICS

95NXH
Article: 06471* U-profile guide

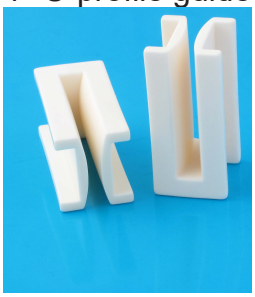

95NXH
Article: 04411* U-profile guide

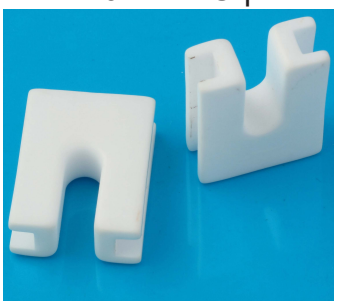

95NXH
Article: 10158* U-profile guide

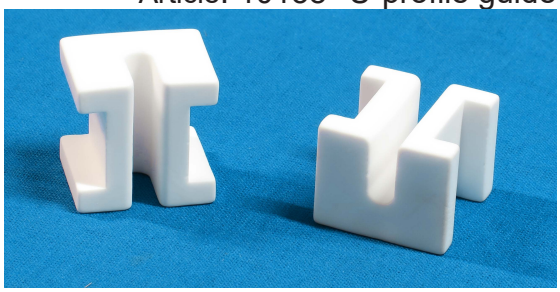

95NXH
Article: 04437* Electrifier head



99,5NXH
Article: 04494* Screw and nut M8



99,5NH
Article: 06427* Custom guide

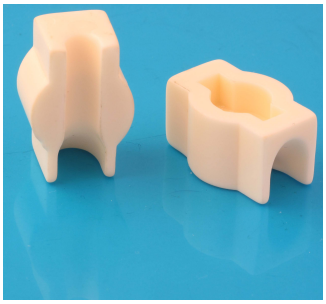

99,5NXH
Article: 02319 Wire guide



99,5NXH
Article: 07930



Reference see General Techn. Spec
* Stock item

Subec AB **Hesselmans Torg 5** **SE- 131 54 Nacka** **Sweden** **Phone: +46-8-88 46 33** **Email: info@subec.se** **Web: www.subec.se**

Copyright © 2026 Subec

CUSTOM MADE CERAMICS

Titan Oxide Diamond Polish
Article: 07355* Antistatic



99,5NXH
Article: 12857* Half guide, wire guide

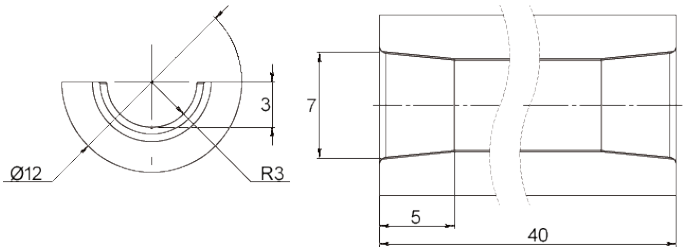

99,5DH
Article: 10571

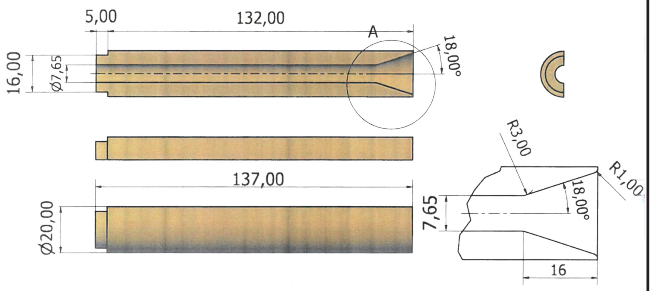

95NH
Article: 12705

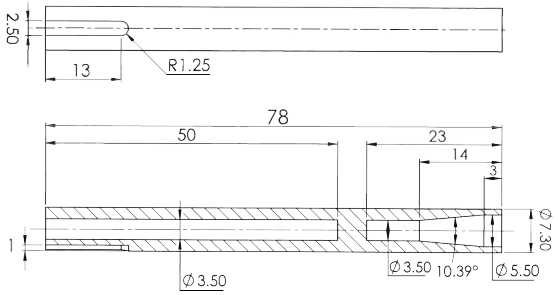

95NH
Article: 12532



99,5NXH
Article: 9543 With various grooves



Reference see General Techn. Spec
* Stock item

Subec AB **Hesselmans Torg 5** **SE- 131 54 Nacka** **Sweden** **Phone: +46-8-88 46 33** **Email: info@subec.se** **Web: www.subec.se**

Copyright © 2026 Subec

GENERAL TECHNICAL SPECIFICATION

for tungsten carbide products

	CODE		
Material		Tungsten carbide	
Surface Finishes	*N*	Normal finish r_a=1,0µm	
	D	Diamond Polish r_a=0,5µm	
Hardness HRA		91 for Eyelets	86 for Rollers

	Chemical composition %								
Sandvik Grades	**WC**	**Co**	**Cr_3C_2**	**Slintering Temp (°C)**	**Density (g/cm³)**	**Vickers Hardness**	**Rockwell Hardness**	**Slintered grain size (µm)**	**Subec recommen-dation**
K03	96,85	3	0,15	1410	15,20	1950	94	0,8	
K10F	93,8	6	0,2	1410	14,95	1770	93,2	0,8	
K10	94,35	5,5	0,15	1450	14,95	1700	92,8	1,0	
K15	89,5	10	0,5	1410	14,48	1600	92,1	0,8	
K20	93,35	6,5	0,15	1450	14,90	1580	92	1,5	
K30	91,25	8,5	0,25	1450	14,65	1455	91	2,0	Eyelets
K40	87,5	12	0,5	1410	14,25	1295	89,3	2,0	
K45	84,5	15	0,5	1360	13,96	1210	88,3	2,0	
G30	85	15		1360	14,00	1030	86	5,0	Rollers
G40	80	20		1360	13,55	910	84,6	5,0	
G50	75	25		1360	13,10	810	83,2	5,0	
G56	72	28		1360	12,85	775	82,8	5,0	

Example Drawing:

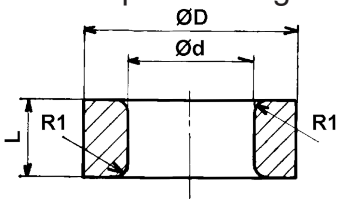

ØD ≤ 10 [+0 / -0,4]
ØD > 10 [+0 / -4%]

Ød ≤ 10 [+0,4 / -0]
Ød > 10 [+4% / -0]

Other dimensions according to DIN ISO 2768cL

Linear Dimensions					
Permissible deviations in mm for ranges in nominal lengths	0,5 - 3	3 - 6	6 - 30	120 - 400	400 - 1000
c (coarse)	±0,2	±0,3	±0,5	±0,8	±1,2
Angular Dimensions					
Permissible deviations in mm for ranges in nominal lengths	< 10	10 - 50	50 - 120	120 - 400	400 <
c (coarse)	±1°30'	±1°	±0°30'	0°15'	0°10'
External Radius and Chamfer Heights					
Permissible deviations in mm for ranges in nominal lengths	0,5 - 3	3 - 6	6 <		
c (coarse)	±0,4	±1,0	±2,0		

	Straightness and flatness					**Perpendicularity**			**Symmetry**			**Run out**
Ranges in nominal lengths in mm	< 10	10 - 30	30 - 100	100 - 300	300 - 1000	< 100	100 - 300	300 - 1000	<100	100 - 300	300 - 1000	
L	0,1	0,2	0,4	0,8	1,2	0,6	1	1,5	0,6	1	1,5	0,5

Alternative to tungsten carbide: Cold working steel hardness 60HRC

Subec will also produce custom made tungsten carbide guides on request.

Subec AB **Hesselmans Torg 5** **SE- 131 54 Nacka** **Sweden** **Phone: +46-8-88 46 33** **Email: info@subec.se** **Web: www.subec.se**

Copyright © 2026 Subec

GENERAL TECHNICAL SPECIFICATION

for cold working steel hardened 60HRC products

Material description									
L %	**C**	**Si**	**Mn**	**Cr**	**Ni**	**Mo**	**W**	**V**	**S**
1,2379	1,55	0,30	0,30	12,0	0,18	0,70	0,18	0,80	0,013
1,2601	1,60	0,30	0,30	12,0	0,18	0,60	0,50	0,30	0,013
1,2080	2,10			12,0					
1,2436	2,10			12,0			0,70		

Roughness and surface				
R_{tmax} [µm]	CLA/R [µm]	CLA [µ"]	RMS [µm]	RMS [µ"]
0,06	0,02	0,75	0,02	0,8
0,1	0,03	1,2	0,04	1,3
0,2	0,06	2,5	0,08	2,8
0,3	0,09	3,7	0,1	4,2
0,4	0,13	5,0	0,14	5,6
0,5	0,16	6,7	0,18	6,9
0,6	0,19	7,5	0,21	8,3
0,7	0,22	8,7	0,25	9,7
0,8	0,25	10,0	0,28	11,1
0,9	0,28	11,2	0,32	12,5
1,0	0,31	12,5	0,35	14,0
1,2	0,38	15,8	0,42	16,7
1,5	0,47	18,8	0,53	20,9
1,8	0,57	22,6	0,64	25,5
2,0	0,64	25,1	0,78	27,9

Roughness and surface				
R_{tmax} [µm]	CLA/R [µm]	CLA [µ"]	RMS [µm]	RMS [µ"]
2,4	0,73	30,1	0,85	33,4
2,8	0,89	35,2	0,99	39,0
3,0	0,95	37,6	1,06	41,9
3,5	1,11	43,9	1,24	48,8
4,0	1,27	50,2	1,41	55,8
5,0	1,59	62,7	1,77	69,7
6,0	1,91	75,5	2,12	83,6
7,0	2,22	87,5	2,48	92,6
8,0	2,54	100,0	2,83	111,7
10,0	3,18	125,5	3,54	140,0
20,0	6,64	251,5	7,8	279,0
40,0	12,7	502,0	14,1	558,0
60,0	19,1	755,0	21,2	836,0
125,0	39,5	1560,0	43,5	1750,0
200,0	64,0	2510,0	78,0	2790,0

Surface Quality according to manufacturer												
Surface symbol according to ISO 1302 new	0,025	0,05	0,1	0,2	0,4	0,8	1,6	3,2	6,3	12,5	25	50
Roughness index	N 1	N 2	N 3	N 4	N 5	N 6	N 7	N 8	N 9	N 10	N 11	N 12
Arithmetic mean value R_a [µm]	0,025	0,05	0,1	0,2	0,4	0,8	1,6	3,2	6,3	12,5	25	50
Surface roughness R_z [µm]	0,25	0,63	1	1,6	2,5	4-6,3	10	16-25	40	63	100	160
Longitudinal grinding												
Peripheral grinding												
Face grinding												
Grinding of hole												
Polish grinding												
Long stroke honing												
Short stroke honing												
Cylindrical lapping Flat lapping												
Ultrasonic lapping												
Polish Lapping												
Surface roughness produced through												

Subec AB **Hesselmans Torg 5** **SE- 131 54 Nacka** **Sweden** **Phone: +46-8-88 46 33** **Email: info@subec.se** **Web: www.subec.se**

Copyright © 2026 Subec

TUNGSTEN CARBIDE CONICAL EYELET

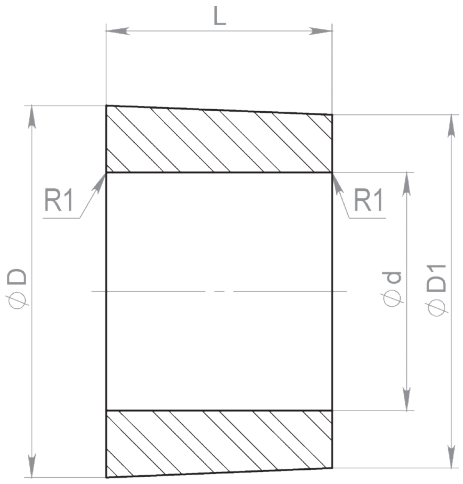

Article	ØD	Ød	ØD1	L	R1
07986	25	16	23,75	15,2	1
07852	18,5	13	17,5	16	1
04374	13,8	7,75	13,35	12,2	1
Drawing No. 3-401145-00					

TUNGSTEN CARBIDE CONICAL EYELET

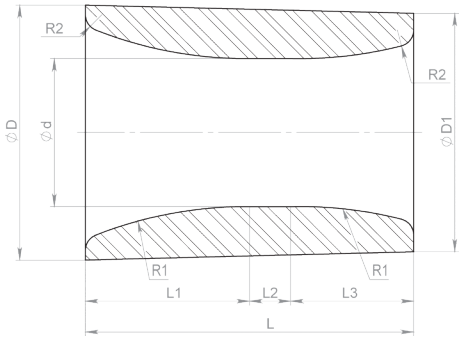

Article	ØD	Ød	Ød1	L	L1	L2	L3	R1	R2
03683	31	18	25	40	20	5	15	50	2
Drawing No. 1-400680-00									

TUNGSTEN CARBIDE GUIDE WITH 2 FLANGES

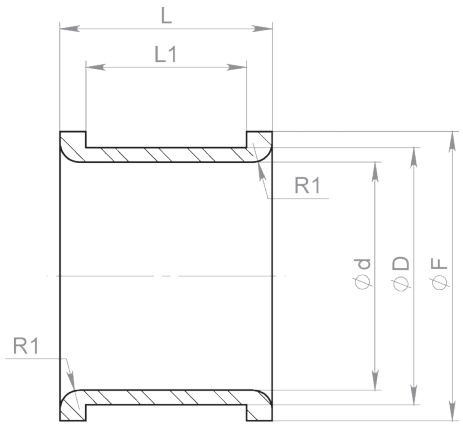

Article	ØD	Ød	ØF	L	L1	R
09106	40	35,5	45	33		3
Drawing No. 3-401146-00						

Alternative to tungsten carbide: Cold working steel hardness 60HRC

Subec AB
Hesselmans Torg 5
SE- 131 54 Nacka
Sweden
Phone: +46-8-88 46 33
Email: info@subec.se
Web: www.subec.se

Copyright © 2026 Subec

CUSTOM MADE TUNGSTEN CARBIDE SAMPLES

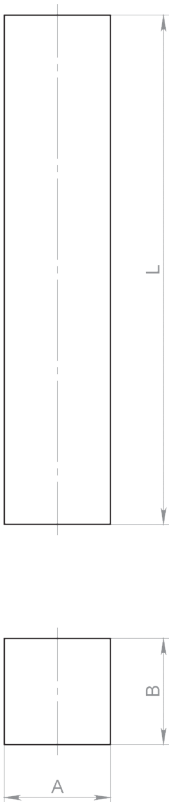

Stamp			
Article	**A**	**B**	**C**
07808	10	10	48
08157	12	12	40

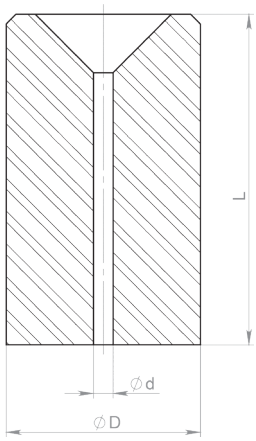

Cutting Die			
Article	**ØD**	**Ød**	**L**
07807	20	2	34
08177	20	2,35	25
08178	20	2,5	25
08179	20	2,7	25

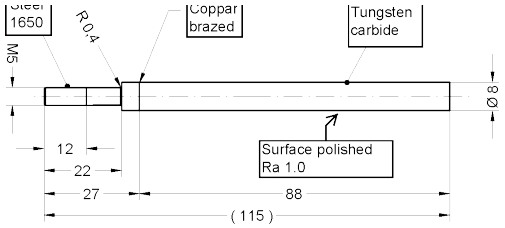

Fork Guide Article: 10328

Guide Sheave
Article: 16896

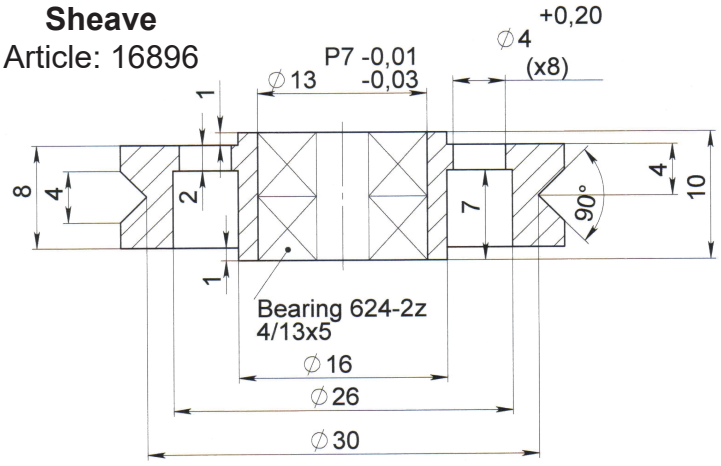

Alternative to tungsten carbide: Cold working steel hardness 60HRC

Subec AB **Hesselmans Torg 5** **SE- 131 54 Nacka** **Sweden** **Phone: +46-8-88 46 33** **Email: info@subec.se** **Web: www.subec.se**

Copyright © 2026 Subec

TUNGSTEN CARBIDE ROLLERS

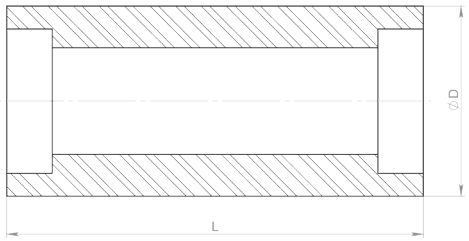

Cylinders			
Article	**ØD**	**L**	**Bearing**
11423	25	40	699-2Z, 619/9-2Z
08442	25	55	
8114A	25	60	699-2Z, 619/9-2Z
08411	30	68	
12657	38	115	6002-2Z
Drawing No. 3-400339-02			

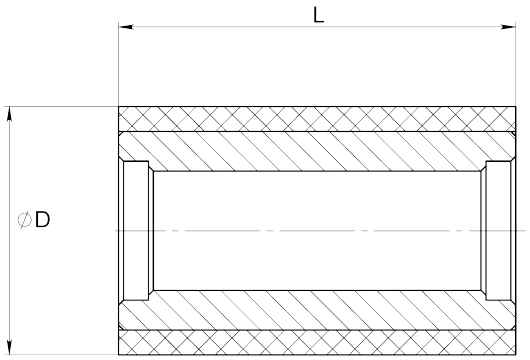

Sleeve roller			
Article	**ØD**	**L**	**Bearing**
12086	25	40	W 617/9
Drawing No. 3-400294-01			



Horizontal Rollers either with or without threded end
Drawing No. 3-400169-00



Vertical Rollers
Drawing No. 3-400070-00

Alternative to tungsten carbide: Cold working steel hardness 60HRC

Subec AB **Hesselmans Torg 5** **SE- 131 54 Nacka** **Sweden** **Phone: +46-8-88 46 33** **Email: info@subec.se** **Web: www.subec.se**

Copyright © 2026 Subec

TUNGSTEN CARBIDE FORMING ROLLER

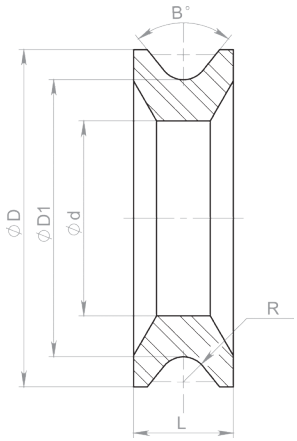

Article	ØD	ØD1	Ød	L	°B	R
09110	135	110	78	40	78	10
Drawing No. 3-401149-00						

TUNGSTEN CARBIDE STRAIGHTENING ROLLER

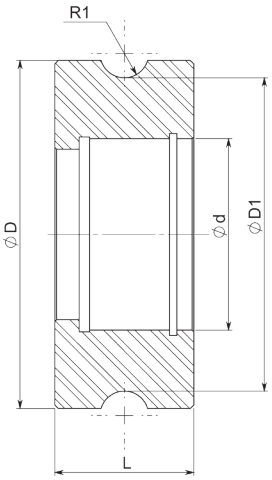

Article	ØD	ØD1	Ød	L	R1
08788	100	90	55	40	7
Drawing No. 3-401151-00					

TUNGSTEN CARBIDE STRAIGHTENING ROLLER

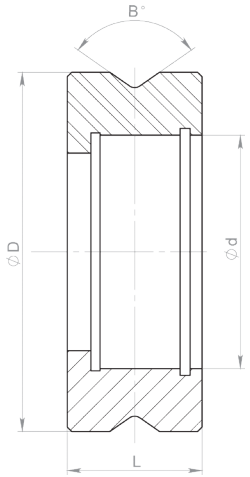

Article	ØD	Ød	L	°B
08787	80	52	30	100
Drawing No. 3-401151-00				

Alternative to tungsten carbide: Cold working steel hardness 60HRC

Subec AB **Hesselmans Torg 5** **SE- 131 54 Nacka** **Sweden** **Phone: +46-8-88 46 33** **Email: info@subec.se** **Web: www.subec.se**

Copyright © 2026 Subec

TUNGSTEN CARBIDE STRAIGHTENING ROLLER

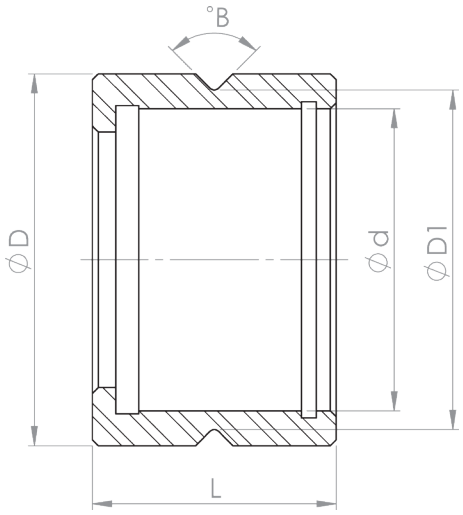

Article	ØD	ØD1	Ød	L	°B
09112	32	29,21	26	25	90
09113	19	17,5	15	15,5	90
Drawing No. 3-401156-00					

TUNGSTEN CARBIDE STRAIGHTENING ROLLER

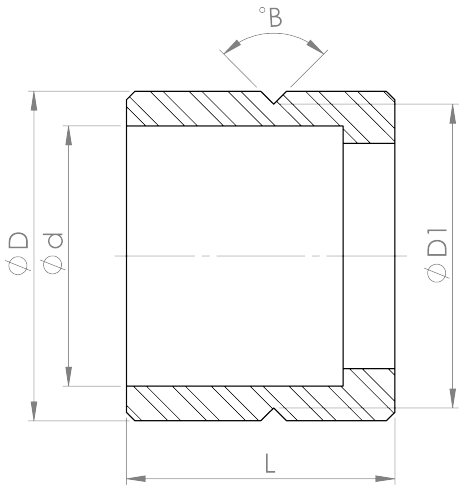

Article	ØD	ØD1	Ød	L
08170	19	17,5	15	15,5
Drawing No. 1-400586-00				

TUNGSTEN CARBIDE STRAIGHTENING ROLLER

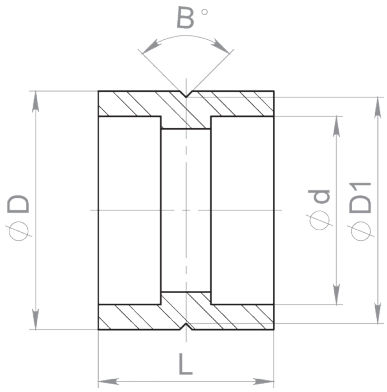

Article	ØD	ØD1	Ød	°B
08171*	19	17,5	15	90
Drawing No. 3-401155-00				

* Stock item

Alternative to tungsten carbide: Cold working steel hardness 60HRC

Subec AB **Hesselmans Torg 5** **SE- 131 54 Nacka** **Sweden** **Phone: +46-8-88 46 33** **Email: info@subec.se** **Web: www.subec.se**

Copyright © 2026 Subec

TUNGSTEN CARBIDE STRAIGHTENING ROLLER

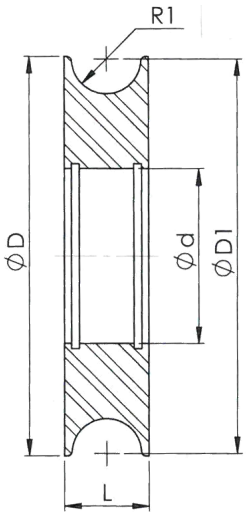

Article	ØD	ØD1	Ød	L	R
09118	80	79	35	17	7
Drawing No. 1-401162-00					

TUNGSTEN CARBIDE STRAIGHTENING ROLLER

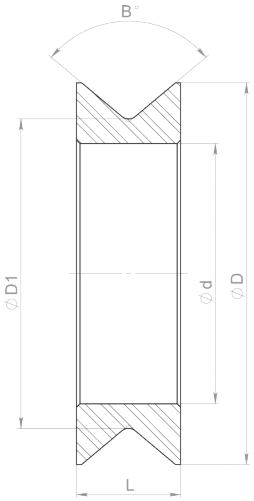

Article	ØD	ØD1	Ød	L	R1
08181*	110	89,17	75	30	100
Drawing No. 1-400977-00					

Article: 8181*



* Stock item

Alternative to tungsten carbide: Cold working steel hardness 60HRC

Subec AB **Hesselmans Torg 5** **SE- 131 54 Nacka** **Sweden** **Phone: +46-8-88 46 33** **Email: info@subec.se** **Web: www.subec.se**

Copyright © 2026 Subec

TUNGSTEN CARBIDE FORMING ROLLER

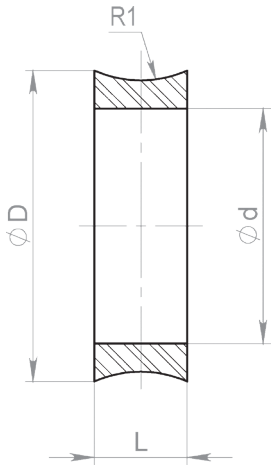

Article	ØD	Ød	L	R1
08536	82,09	62	24,47	30
Drawing No. 3-401153-00				

Alternative to tungsten carbide: Cold working steel hardness 60HRC

Subec AB **Hesselmans Torg 5** **SE- 131 54 Nacka** **Sweden** **Phone: +46-8-88 46 33** **Email: info@subec.se** **Web: www.subec.se**

Copyright © 2026 Subec

TUNGSTEN CARBIDE TUBE EYELETS

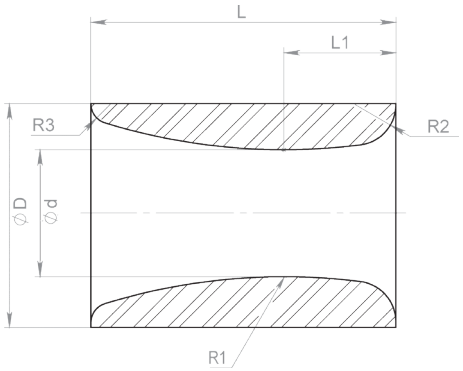

Article	ØD	Ød	L	L1	R1	R2	R3
06931	18	10	25	8	50	2,5	2,5
	26	16	18		50	2	2
15520	32	25	12		16,5	2,5	2,5
12015	42	28	15		16	1	2
06917	45	25	60	22	120	8	4
06932	50	16	50		80	5	5
06915	50	18	50		80	5	3
	50	25	40		80	5	5
06916	80	44	75		100	4	4
Drawing No. 1-400623-00							

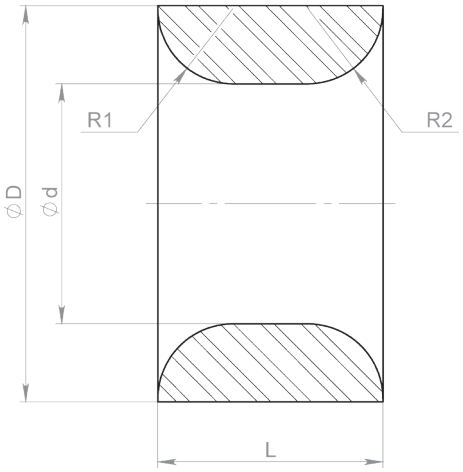

Article	ØD	Ød	L	R1	R2
03227*	10,2	4,5	6	2	2
14793*	12	6	10	2	2
03225	13,2	8	7,5	2,5	2,5
07022	16,1	9,8	10,4	3	3
12013	20	14	16	2	2
12017	30	20	22	3	3
17728*	33	19	7,6	2,5	2,5
12046*	35	25	20	2	7
Drawing No. 1-400646-00					

Article: 12046*



Article: 03227*

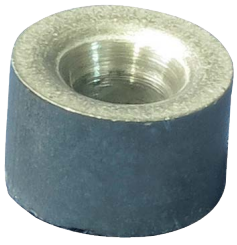

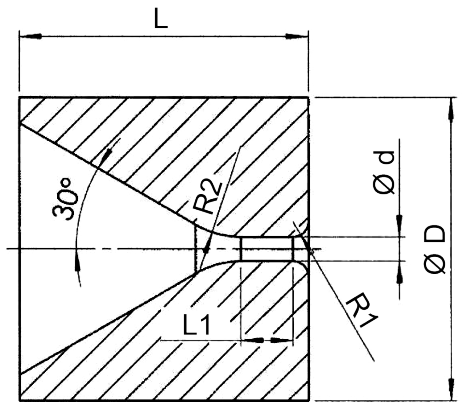

Article	ØD	Ød	L	L1	R1	R2
10994*	10	0,8	9,5	9,7	0,5	3
Drawing No. 3-401365-00						

* Stock item

Alternative to tungsten carbide: Cold working steel hardness 60HRC

Subec AB **Hesselmans Torg 5** **SE- 131 54 Nacka** **Sweden** **Phone: +46-8-88 46 33** **Email: info@subec.se** **Web: www.subec.se**

Copyright © 2026 Subec

TUNGSTEN CARBIDE TUBE EYELETS

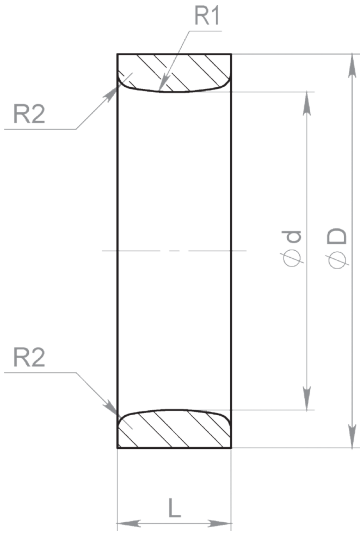

Article	ØD	Ød	L	R1	R2
07589	46	35	20	25	2,5
06914	52	42	15	30	2
07714	90	70	25	25	5
08885	20	12	10	8	1,6
08886	26	18	10	16,5	2
07689*	10	3	7	8	1
07588	22	15,4	10	16	1
07587	32	20	12	10	2,5
06911	32	25	12	16,5	2
06913	60	44	22	25	4
06892	50	18	50	90	5
	12	4	7	4	1
06933	14	6	7	6	1,6
	18	10	8	6	1,6
	44	32	18	20	3
06918	100	80	25	25	5
07216	19	11,5	15	13,6	1
06910	25	18	10	16,5	2
07056	40	25	15	15	2,5
06912	45	35	20	25	2,5
	25	12	25	31	1,5
	12	5,8	12	15	1,5
Drawing No. 1-401163-00					

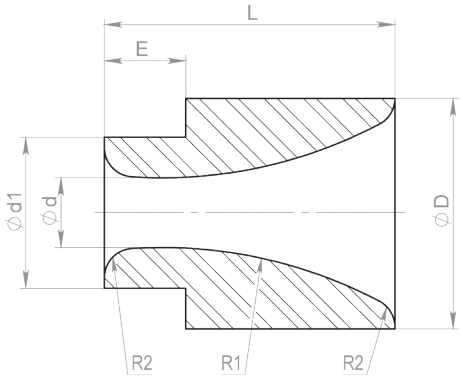

Article	ØD	Ød	Ød1	L	E	R1	R2
07023*	40	12	26	50	14	80	5
06936	40	10	26	50	14	80	5
Drawing No. 1-401164-00							

* Stock item

Alternative to tungsten carbide: Cold working steel hardness 60HRC

Subec AB **Hesselmans Torg 5** **SE- 131 54 Nacka** **Sweden** **Phone: +46-8-88 46 33** **Email: info@subec.se** **Web: www.subec.se**

Copyright © 2026 Subec

TUNGSTEN CARBIDE TUBE EYELETS

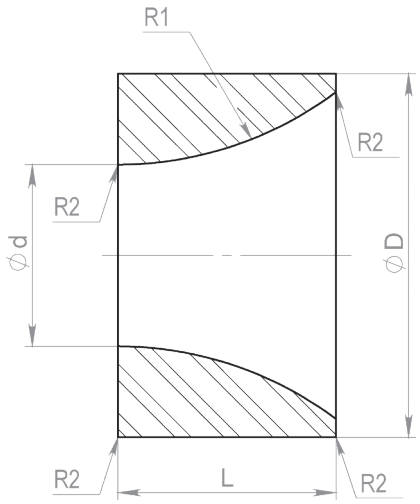

Article	ØD	Ød	L	R1	R2
07055	50	25	30	50	1
Drawing No. 3-401165-00					

TUNGSTEN CARBIDE GUIDE WITH FLANGE

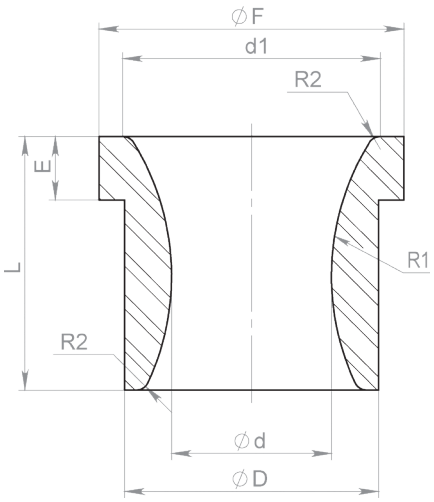

Article	ØD	Ød	Ød1	ØF	L	E	R1	R2
07054	14	5,8	15	17	20	5	16	1
07316	18	9	17	21	20	5	20	1
06942	20	12	19	24	20	5	20	1
12018	55	22		65	80	20	179	3
Drawing No. 3-401166-00								

TUNGSTEN CARBIDE GUIDE WITH FLANGE

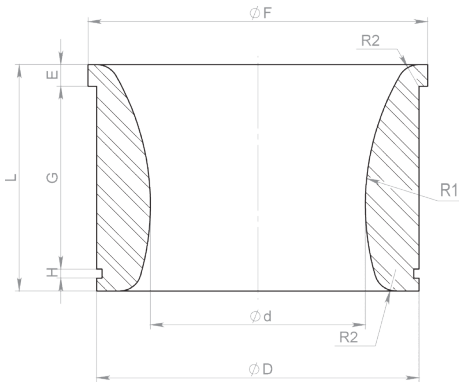

Article	ØD	Ød	ØF	L	E	R1	R2	G	H
07387	150	100	158	100	10	120	10	84,85	4,15
Drawing No. 3-401167-00									

* Stock item

Alternative to tungsten carbide: Cold working steel hardness 60HRC

Subec AB **Hesselmans Torg 5** **SE- 131 54 Nacka** **Sweden** **Phone: +46-8-88 46 33** **Email: info@subec.se** **Web: www.subec.se**

Copyright © 2026 Subec

TUNGSTEN CARBIDE GROOVED FEED ROLLERS

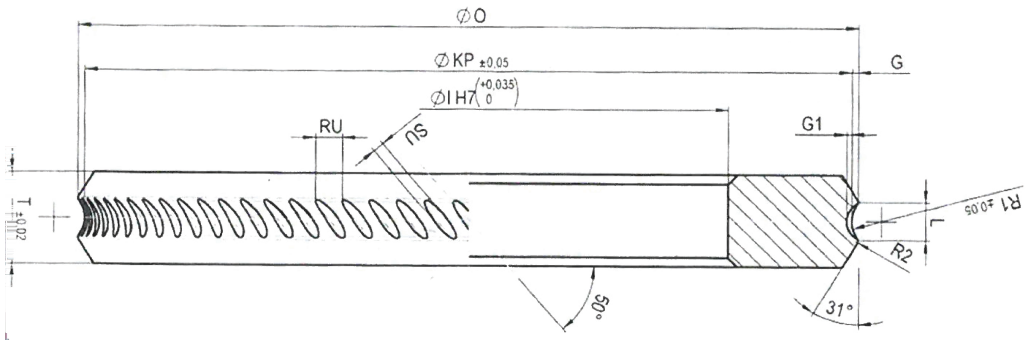

PR	R1	L	G	R2	KP				G1	SU	RU	St.U			
					123	125	140	150				123	125	140	150
PR 3	2,46	2,75	0,36	0,3	122,28	124,28	139,28	149,28	0,68	1,3	3,5	110	112	126	134
PR 3,5	2,72	3,12	0,44	0,3	122,12	124,12	139,12	149,12	0,68	1,3	3,5	110	112	124	134
PR 4	2,97	3,55	0,52	0,4	121,97	123,97	138,97	148,97	0,67	1,4	3,5	110	112	124	134
PR 4,5	3,15	3,98	0,63	0,4	121,74	123,74	138,74	148,74	0,71	1,45	3,5	110	112	124	134
PR 5	3,46	4,35	0,69	0,4	121,62	123,62	138,62	148,62	0,75	1,5	3,5	110	110	124	134
PR 5,5	3,71	4,75	0,78	0,4	121,44	123,44	138,44	148,44	0,79	1,55	4,4	86	88	98	106
PR 6	4,17	5,3	0,85	0,5	121,3	123,3	138,3	148,3	0,83	1,6	4,4	86	88	98	106
PR 6,5	4,46	5,75	0,95	0,5	121,1	123,1	138,1	148,1	0,73	1,7	4,4	86	88	98	106
PR 7	4,75	6,2	1,05	0,5	12,91	122,91	137,91	147,91	0,81	1,8	4,4	86	88	98	106
PR 7,5	5,05	6,65	1,14	0,5	120,71	122,71	137,71	147,71	0,89	1,9	5,3	72	72	82	88
PR 8	5,31	7,1	1,25	0,5	120,49	122,49	137,49	147,49	0,88	2	5,3	72	72	82	88
PR 8,5	5,58	7,55	13,6	0,5	120,28	122,28	137,28	147,28	0,96	2,1	5,3	72	72	82	88
PR 9	6,01	8	1,42	0,5	120,16	122,16	137,16	147,16	1,04	2,2	6,3	60	60	68	74
PR 9,5	6,34	8,45	1,5	0,5	120	122	137	147	0,87	2,2	6,3	60	60	68	74
PR 10	6,6	8,9	1,61	0,5	119,78	121,78	136,78	146,78	0,94	2,3	6,3	60	60	68	74
PR 10,5	6,9	9,35	1,71	0,5	119,58	121,58	136,58	146,58	0,94	2,3	6,3	60	60	68	74
PR 11	7,18	9,8	1,82	0,5	119,36	121,36	136,36	146,36	1,02	2,4	7,6	50	50	56	60
PR 11,5	7,53	10,25	1,9	0,5	119,2	121,2	136,2	146,2	1,02	2,4	7,6	50	50	56	60
PR 12	7,89	10,7	1,98	0,5	119,04	121,04	136,04	146,04	1,1	2,5	7,6	50	50	56	60
PR 13	8,52	11,56	2,15	0,5	118,7	120,7	135,7	145,7	1,18	2,6	7,6	50	50	56	60
PR 13,5	9	12	2,18	0,5	118,64	120,64	135,64	145,64	1,18	2,6	7,6	50	50	56	60
PR 14	9,18	12,45	2,32	0,5	118,36	12,36	135,36	145,36	1,26	2,7	8,3	44	46	52	56

Wire Range Ø	(OD) Ømm	(ID) Ømm	(T) mm
4-8,5	125	82	15
9,12	125	82	20
4-8,5	140	90	15
9-12	140	90	20
4-8,5	150	90	15
9-12	150	90	20

Subec AB **Hesselmans Torg 5** **SE- 131 54 Nacka** **Sweden** **Phone: +46-8-88 46 33** **Email: info@subec.se** **Web: www.subec.se**

Copyright © 2026 Subec

LASER LENGTH MEASURING PRINCIPLES

CLU - Center Line Unit

Products of various diameters are guided through the measuring point. The rollers are closing around the product so that the center of the cable (CL) can remain at the same height. The CL height stays the same regardless of change in product diameter.

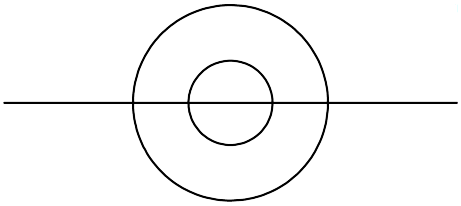



Advantage: A change in the diameter of the product only affects the depth of field of the laser by half the diameter. The center line is independent of the product diameter.
Disadvantage: CLU guides are often more costly than simple guides.

BLU - Bottom Line Unit

Products of various diameters are guided through the measuring point and they have the same common lower height from the floor.

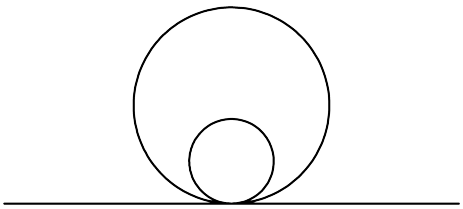



Advantage: Simple and lower priced guides can be used.

Disadvantage: A big change in the product diameter causes the product to fall outside the depth of field, then, either the laser source or the guides have to be raised or lowered. However, once the laser source has been set it should ideally not be touched, for optimal readings.

TLU - Top Line Unit

Products of various diameters are guided through the measuring point with a common upper height from the floor. The center line is raised when changing from a larger diameter to a smaller diameter.

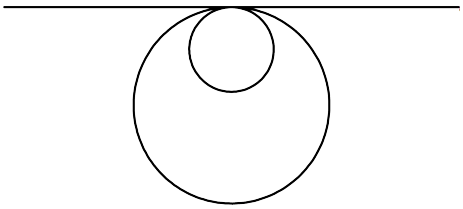

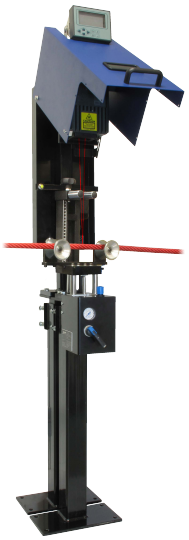

Advantage: The laser beam will always hit the product with the best possible focus. Helps to achieve a better percentage of good readings and contributes to a higher accuracy of length measuring.

Disadvantage: If the center line can not be altered, this principle of guiding can not be used.

Subec AB **Hesselmans Torg 5** **SE- 131 54 Nacka** **Sweden** **Phone: +46-8-88 46 33** **Email: info@subec.se** **Web: www.subec.se**

Copyright © 2026 Subec

LENGTH COUNTER, CAT 3-50

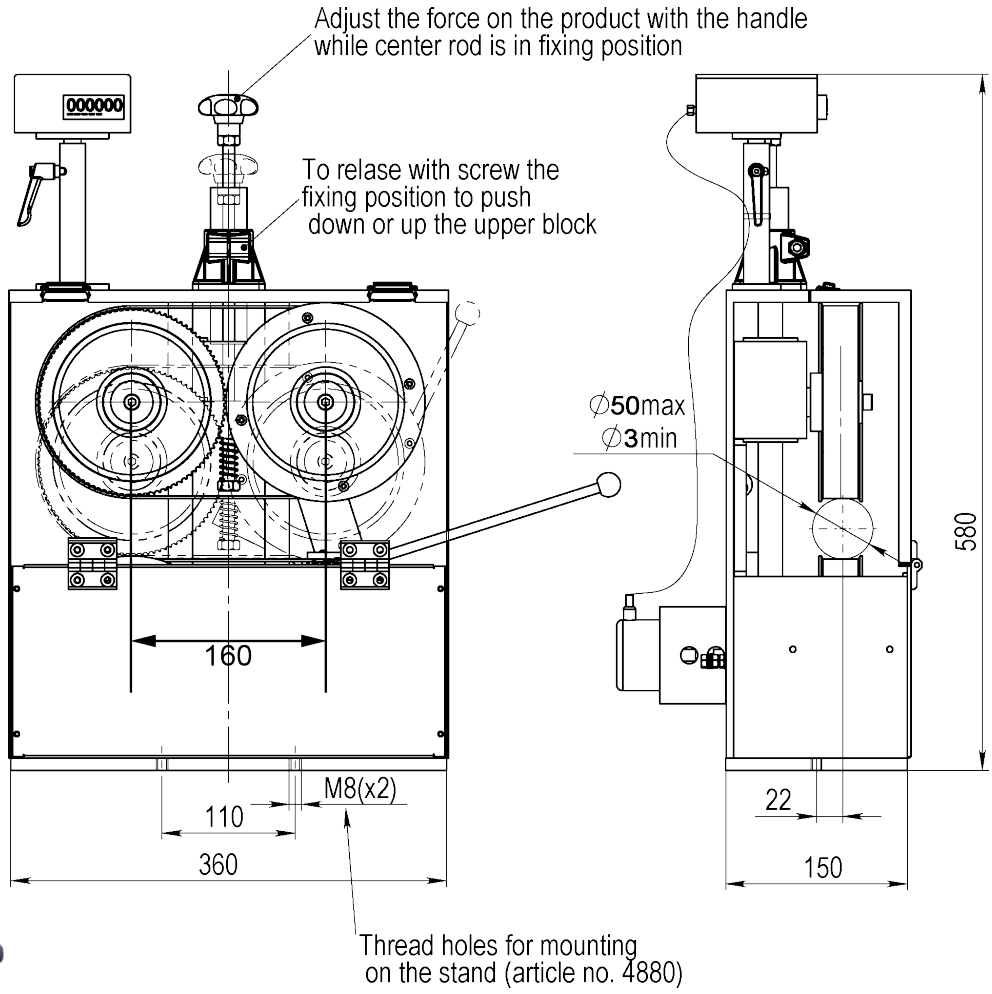

Article: 04610
Weight: 40kg

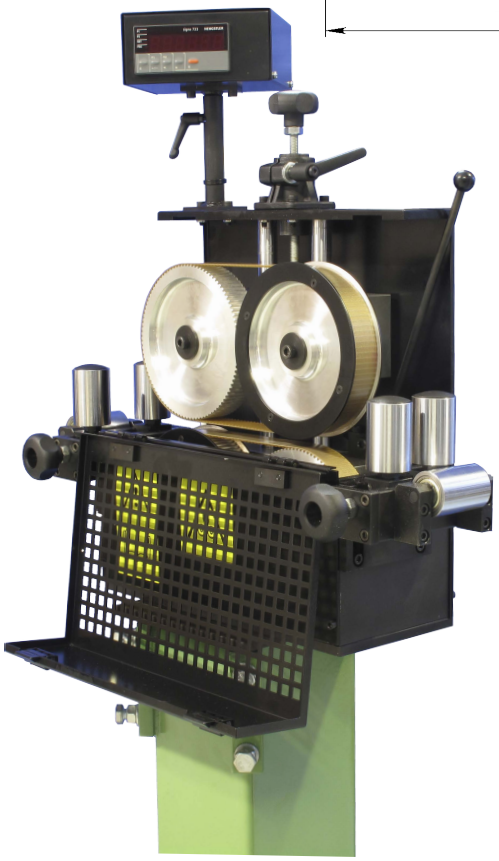

Option: Pneumatic execution with springloaded roller guides
Article: 13257



Roller Guide
Article: 8057

Drawing No. 3-400428-04

Subec AB **Hesselmans Torg 5** **SE- 131 54 Nacka** **Sweden** **Phone: +46-8-88 46 33** **Email: info@subec.se** **Web: www.subec.se**

Copyright © 2026 Subec

LENGTH COUNTER, CAT 5-100

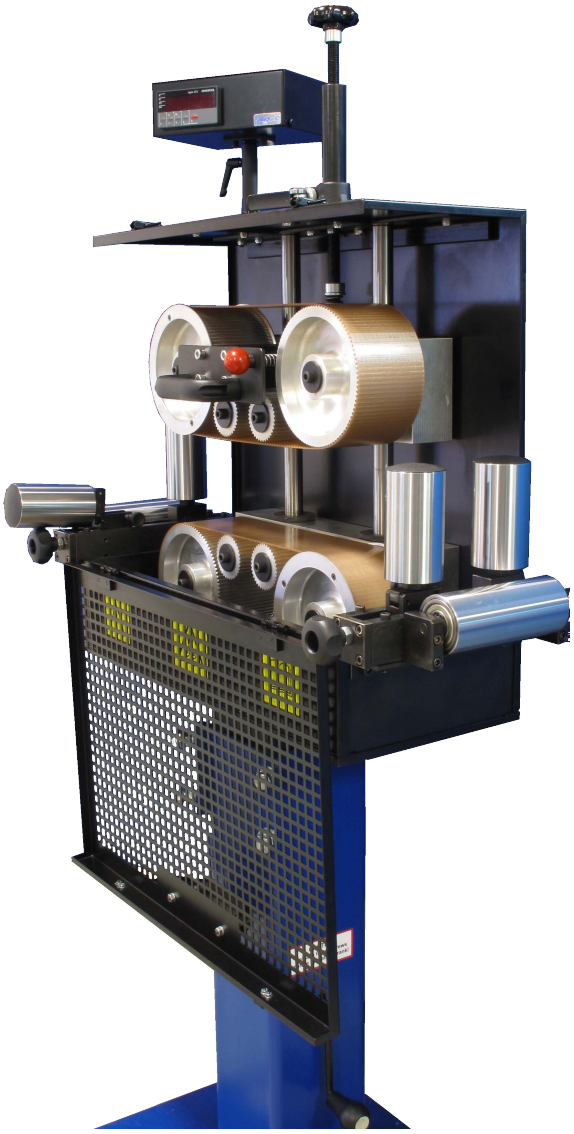

Article: 02020

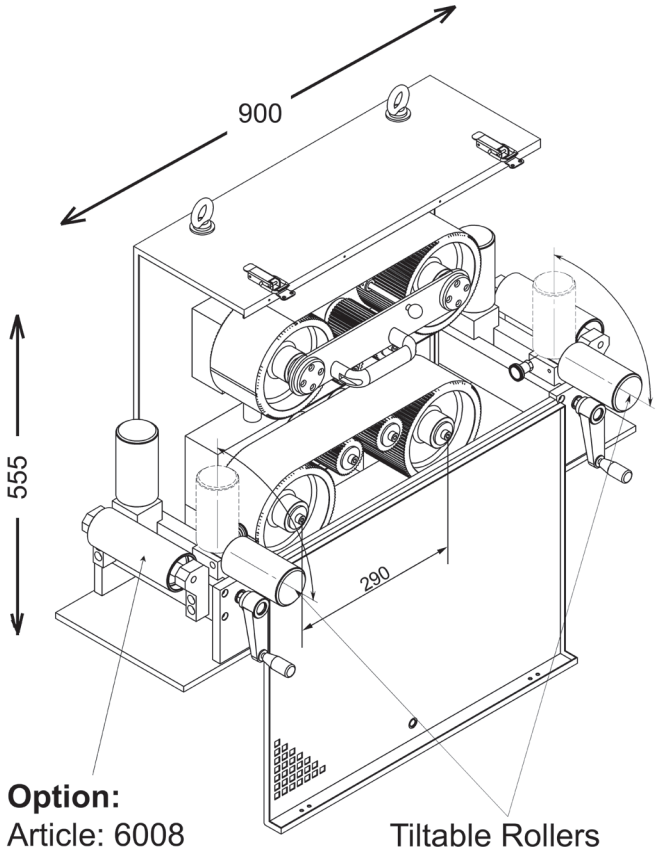

Option:
Article: 6008 Tiltable Rollers

Standard:

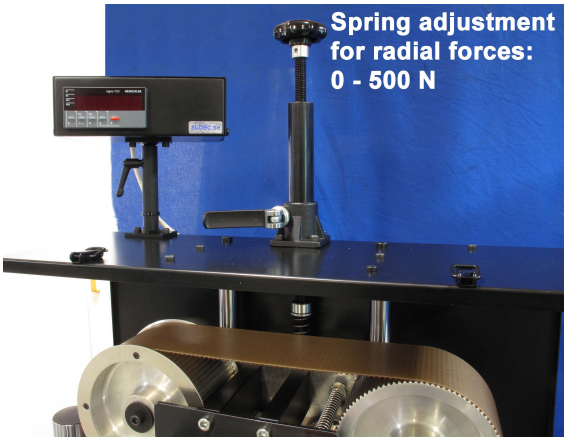

Option: Article: 05970



Drawing No. 1-400452-04

Subec AB **Hesselmans Torg 5** **SE- 131 54 Nacka** **Sweden** **Phone: +46-8-88 46 33** **Email: info@subec.se** **Web: www.subec.se**

Copyright © 2026 Subec

LENGTH COUNTER, TOP CAT 5-100

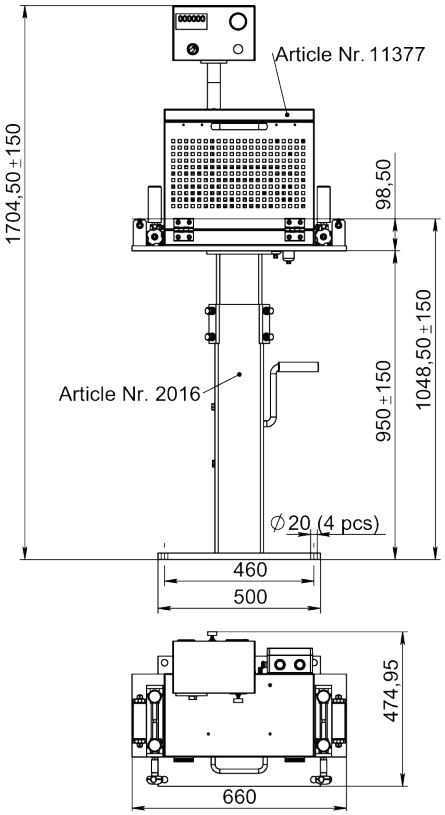

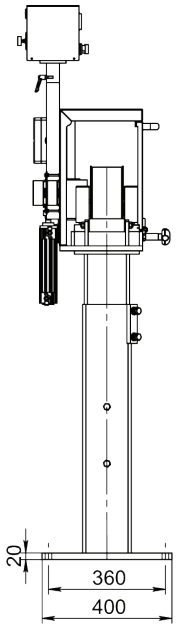

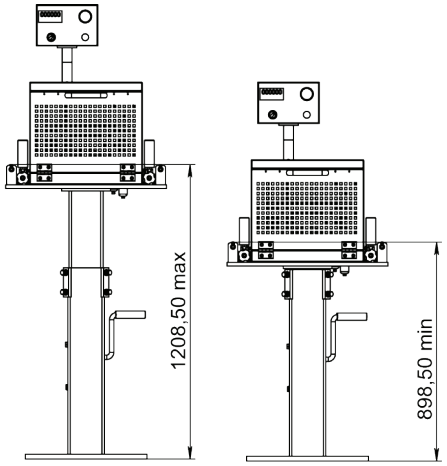

Article: 11377



Drawing No. 3-400886-00

Subec AB **Hesselmans Torg 5** **SE- 131 54 Nacka** **Sweden** **Phone: +46-8-88 46 33** **Email: info@subec.se** **Web: www.subec.se**

Copyright © 2026 Subec

LENGTH COUNTER, TOP CAT 5-150

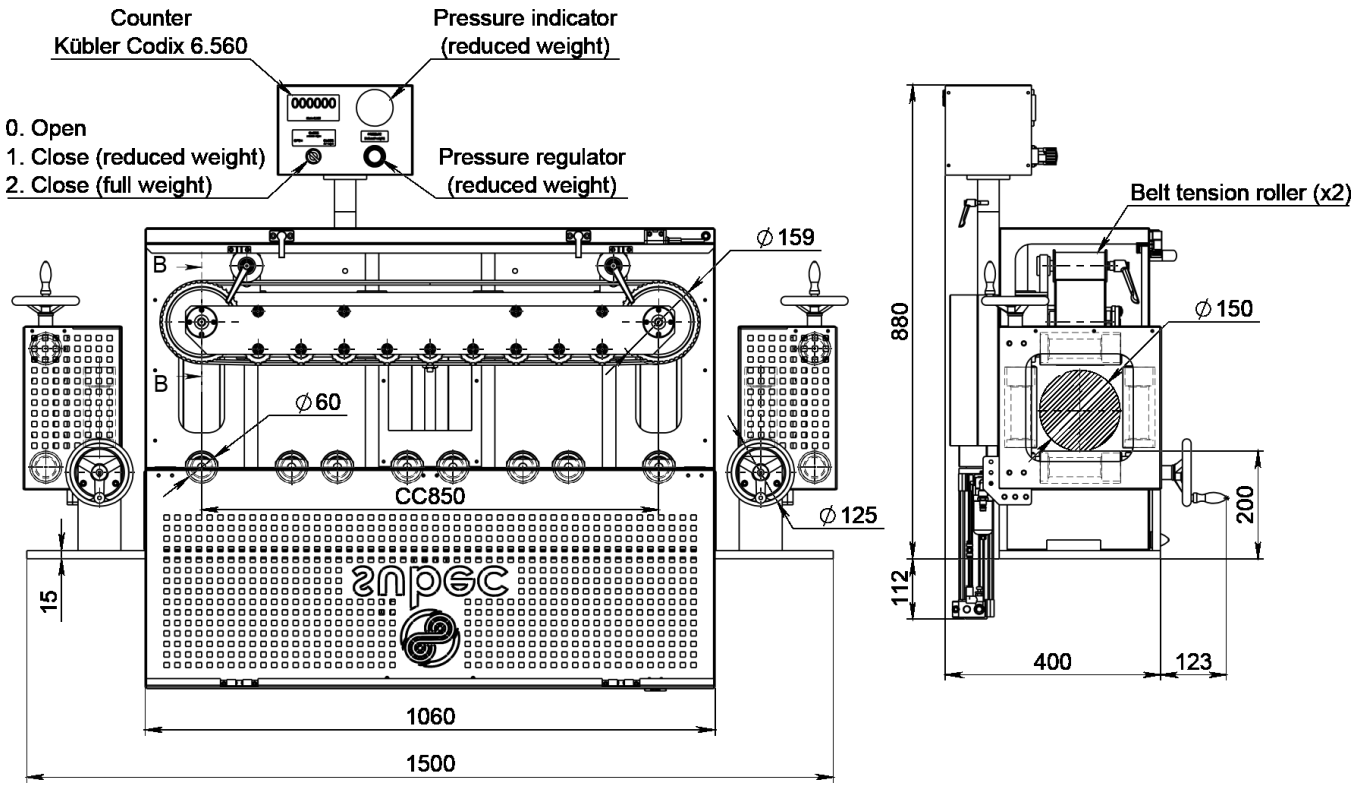

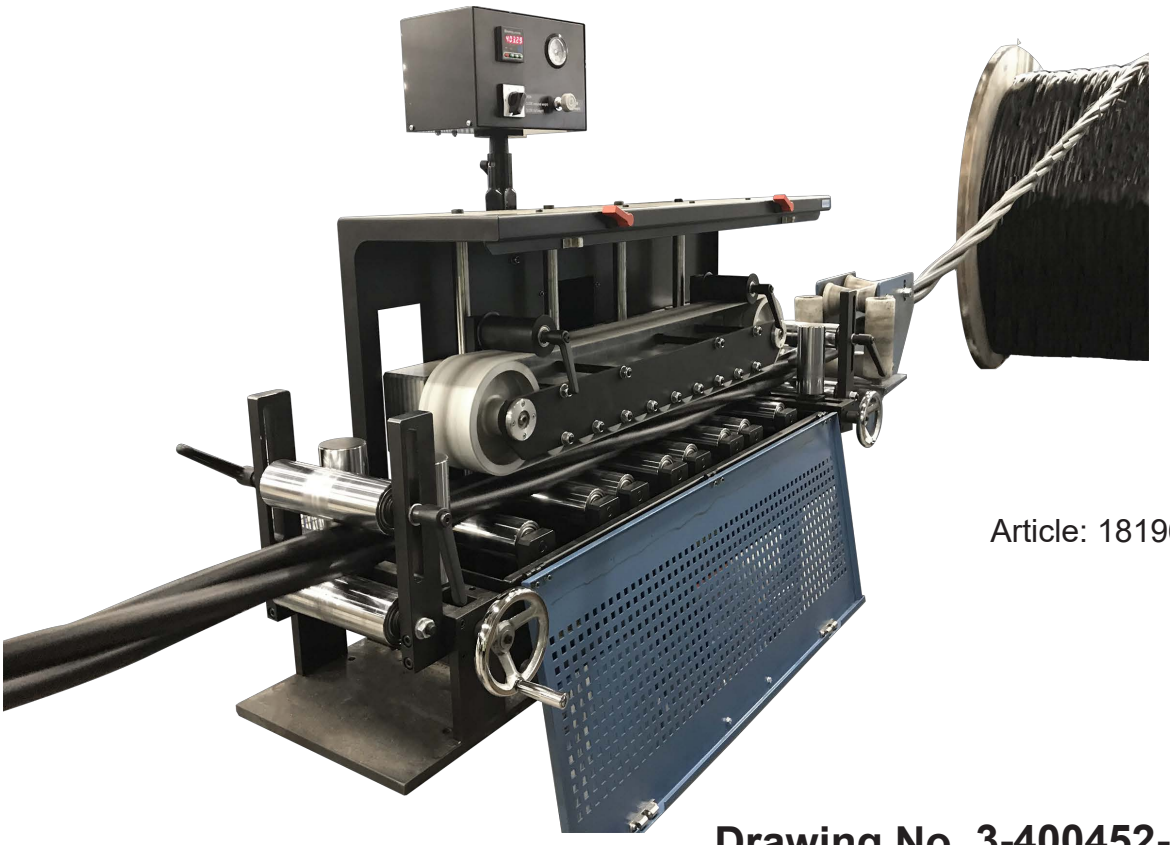

Article: 18196

Drawing No. 3-400452-01

Subec AB **Hesselmans Torg 5** **SE- 131 54 Nacka** **Sweden** **Phone: +46-8-88 46 33** **Email: info@subec.se** **Web: www.subec.se**

Copyright © 2026 Subec

LENGTH COUNTER, TOP CAT 15-150

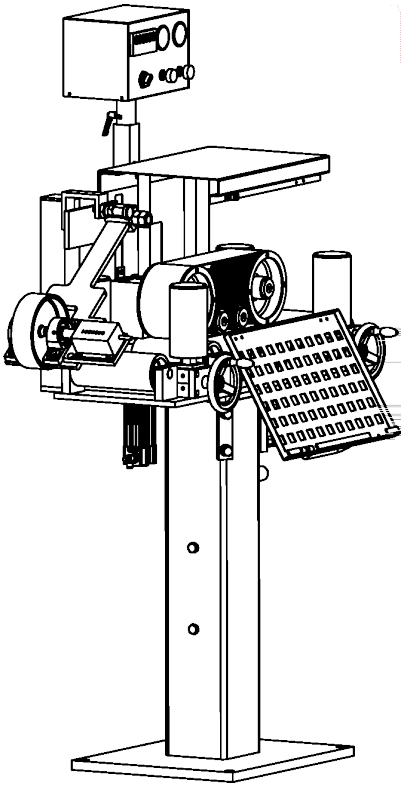

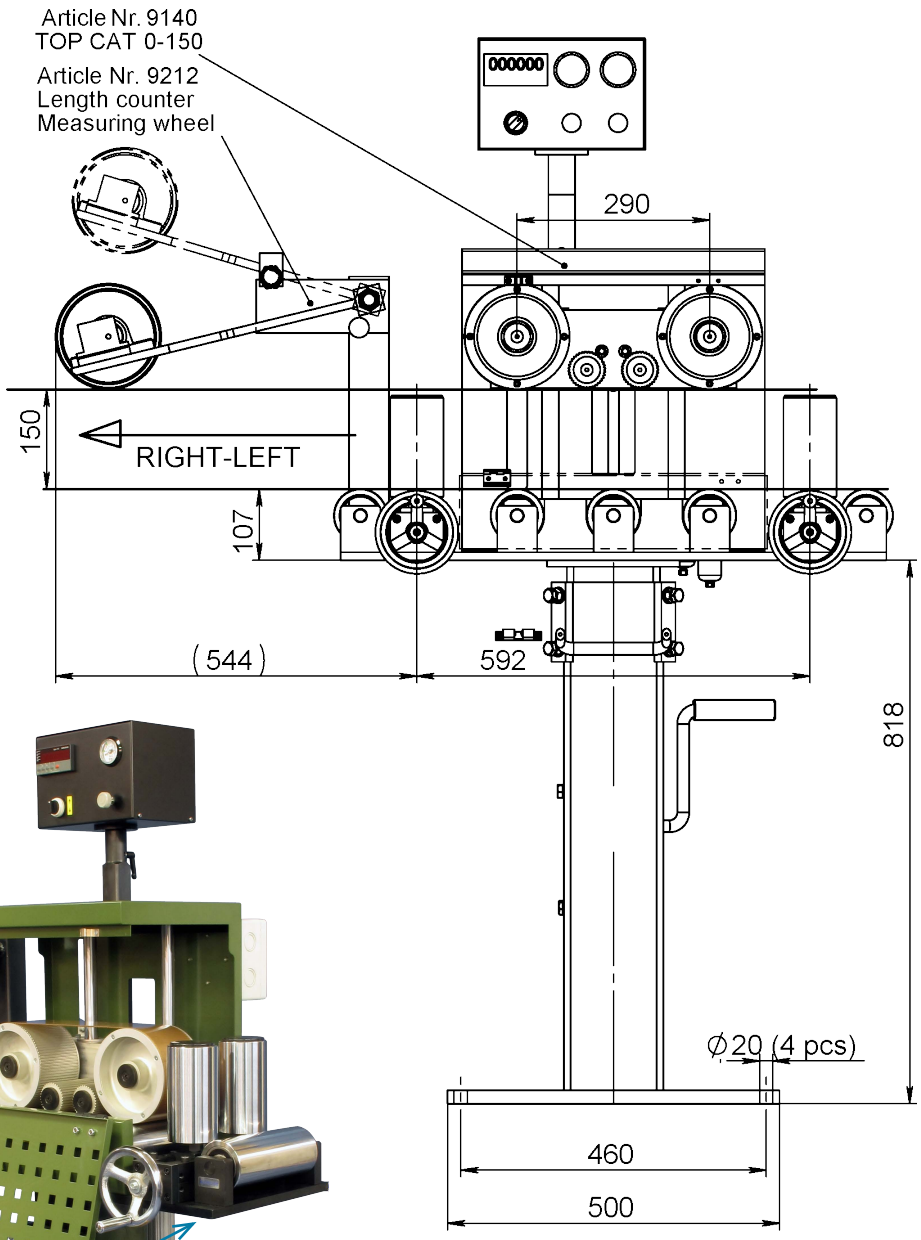

Article: 09140
With display, pneumatic opening, encoder

Option: 9212

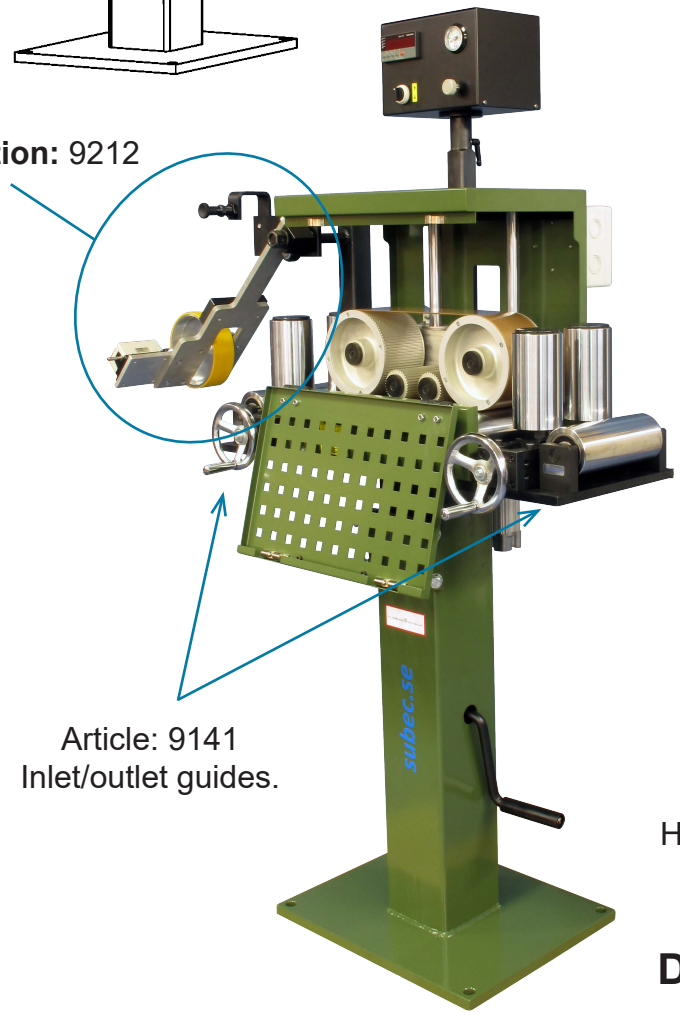

Article: 9141
Inlet/outlet guides.

Article: 2016
Height Adjustable Stand

Drawing No. 3-400886-00

Subec AB **Hesselmans Torg 5** **SE- 131 54 Nacka** **Sweden** **Phone: +46-8-88 46 33** **Email: info@subec.se** **Web: www.subec.se**

Copyright © 2026 Subec

LENGTH COUNTER, TOP CAT 50-350

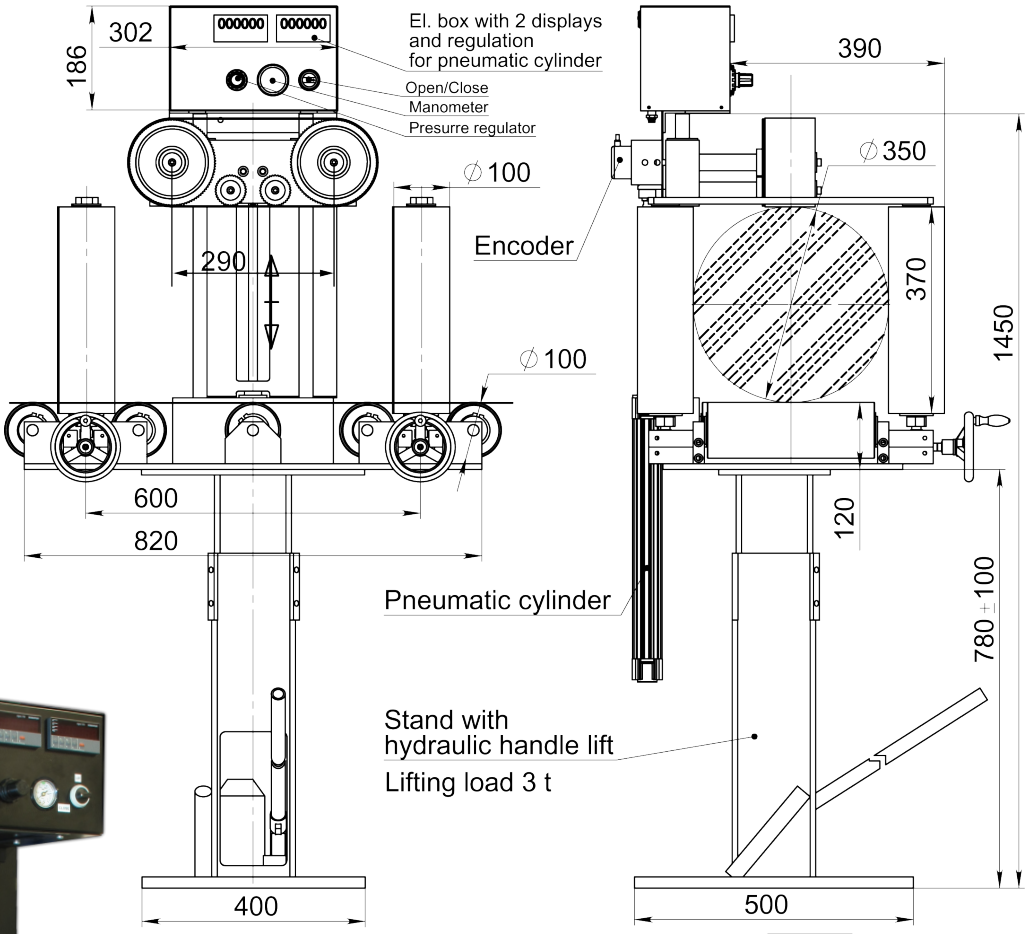



Article: 06861

Drawing No. 3-400886-00

Subec AB **Hesselmans Torg 5** **SE- 131 54 Nacka** **Sweden** **Phone: +46-8-88 46 33** **Email: info@subec.se** **Web: www.subec.se**

Copyright © 2026 Subec

LENGTH COUNTER, SWA 50-350

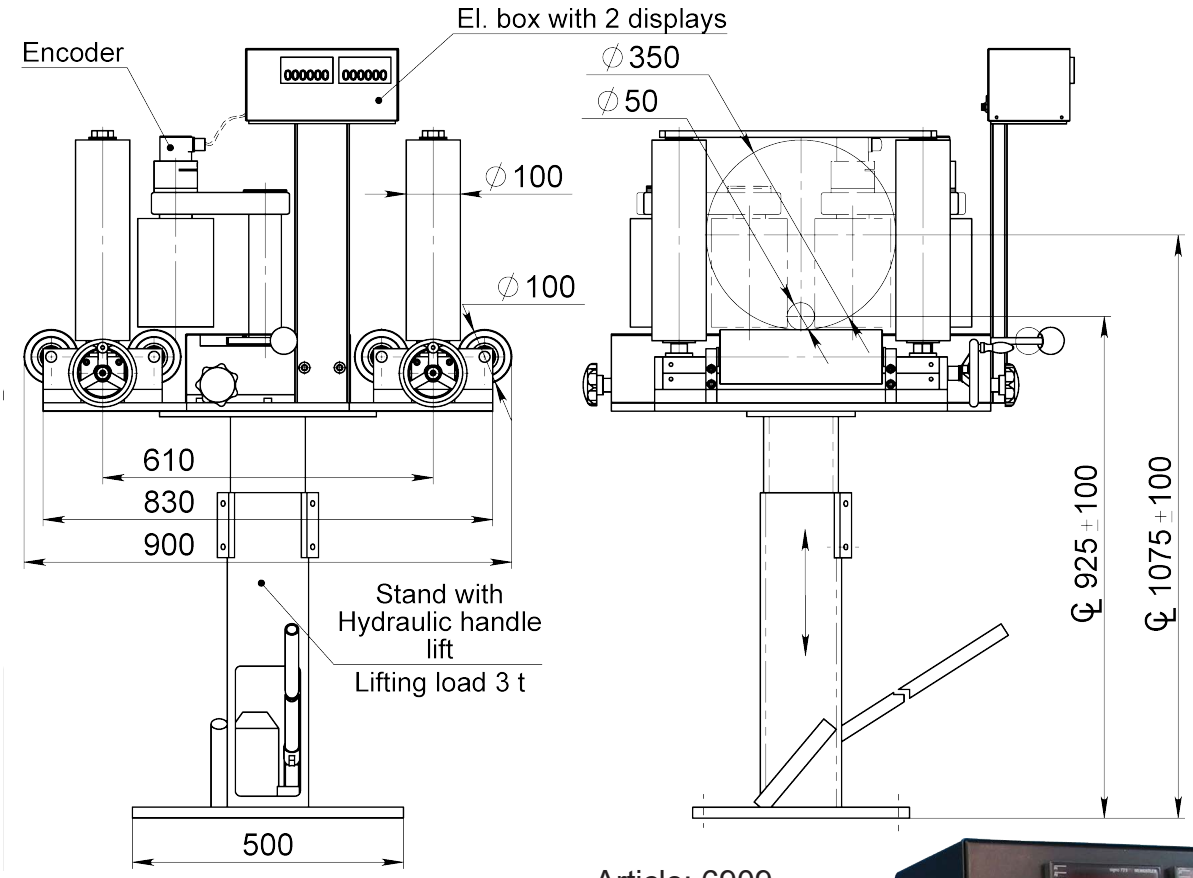

Article: 6909

Model SWA 5-200 or
other sizes available
Article: 06668



Drawing No. 3-400865-00

Subec AB **Hesselmans Torg 5** **SE- 131 54 Nacka** **Sweden** **Phone: +46-8-88 46 33** **Email: info@subec.se** **Web: www.subec.se**

Copyright © 2026 Subec

MEASURING CONSOLE FOR LASER LENGTH COUNTERS, CLU

CLU - Center Line Unit

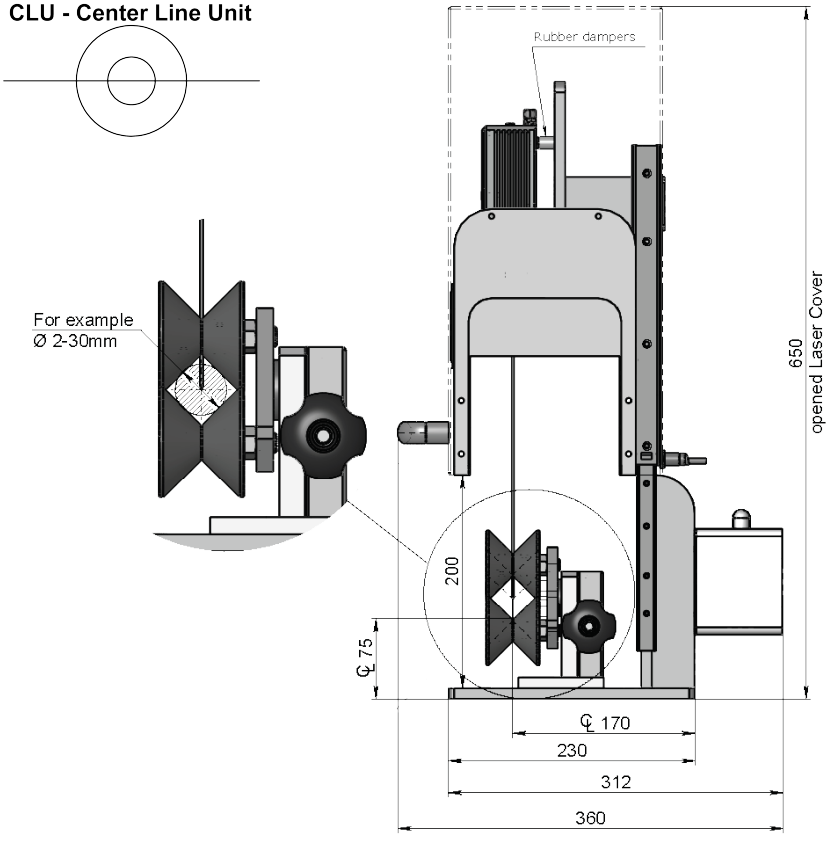

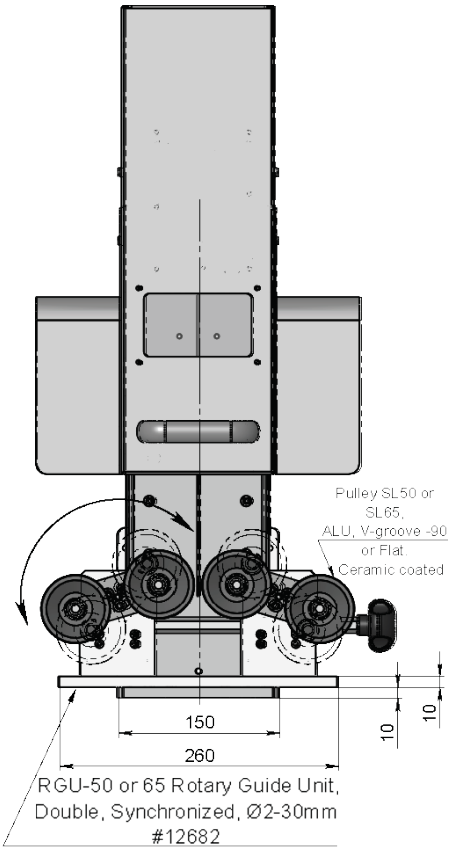

With:

1. Mechanical Slide-Up Cover
   Article: 12681 (See photo)

2a. Pneumatic Slide-Up Cover
   Article: 12696

2b. Pneumatic Control Panel
   Article: 13032



Info:
Synchronised pulley adjustment with one hand operation for optimal alignment of the wire through the laser measuring point.

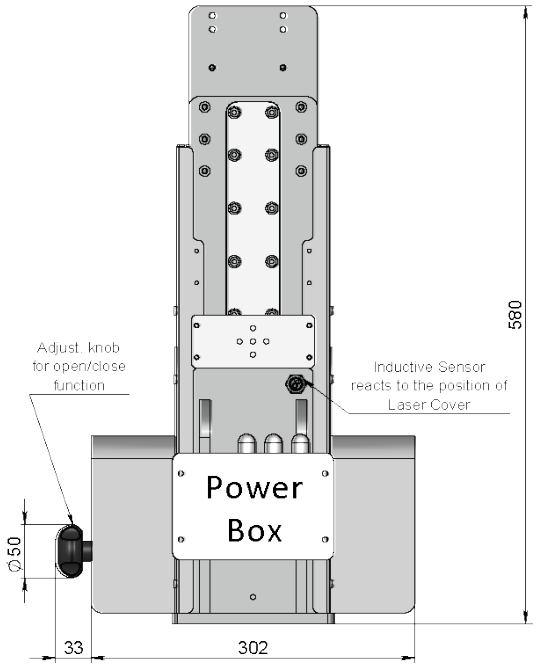

Drawing No. 3-400681-00

Subec AB **Hesselmans Torg 5** **SE- 131 54 Nacka** **Sweden** **Phone: +46-8-88 46 33** **Email: info@subec.se** **Web: www.subec.se**

Copyright © 2026 Subec

MEASURING CONSOLE FOR LASER LENGTH COUNTERS, CLU

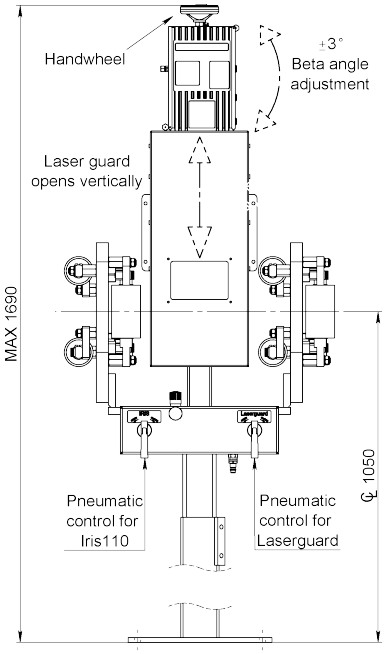

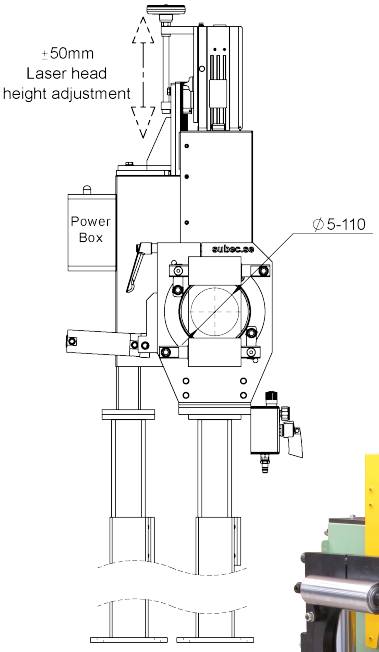

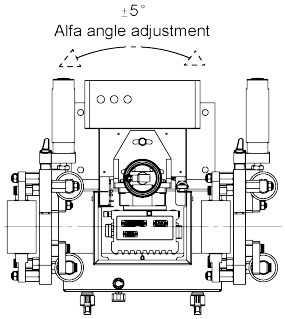

Article: 11636

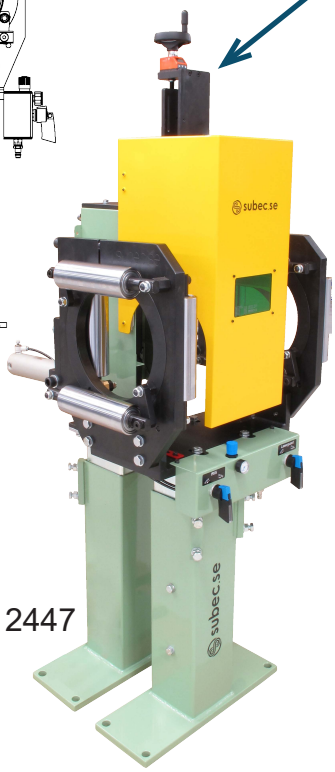

Article: 12447

CLU - Center Line Unit

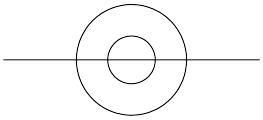

A possibility to adjust the height of the laser head is added to the console if the product diameter range is wide. This ensures that the product remains inside the laser DOF (Depth of Field).

CL and color to be specified.

All mounting bolts prepared for inspection sealing wire. (MID) Including mounting stand and cosine angle adjustments. Start/ Stop point specified.

Pneumatic Roller Crosses and pneumatic slide-up cover.

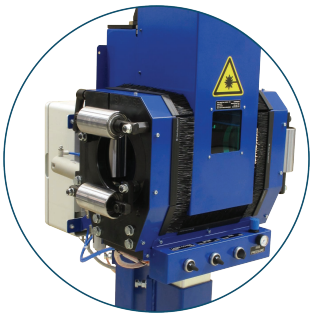

Article: 15144A
Safety cover with brushes

Article	Type	Product Range	Handwheel	Note
13073	Iris	10-70mm		
13171	Rollers Cross	0-110mm	X	Supports round and flat products
11636	Iris	5-110mm	X	
15144A	Iris	5-110mm	X	Safety cover with brushes
12156	Iris	10-160mm	X	
15325	Iris	10-160mm	X	Safety cover with brushes
12447	Iris	25-200mm	X	
15044	Iris	25-200mm	X	
16545	Iris	25-200mm	X	Complete encapsulation according to laser safety regulations
13209	Iris	20-300mm	X	

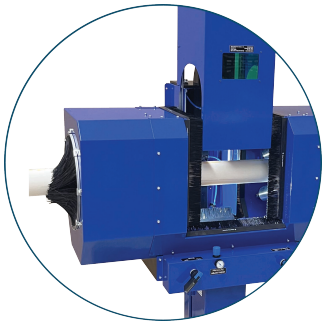

Article: 16545
Complete encapsulation

Drawing No. 3-401308-00

Subec AB **Hesselmans Torg 5** **SE- 131 54 Nacka** **Sweden** **Phone: +46-8-88 46 33** **Email: info@subec.se** **Web: www.subec.se**

Copyright © 2026 Subec

MEASURING CONSOLE FOR LASER LENGTH COUNTERS, TLU

Pneumatic with automatic diameter adjustment
for contactless length measuring of longitudinal products

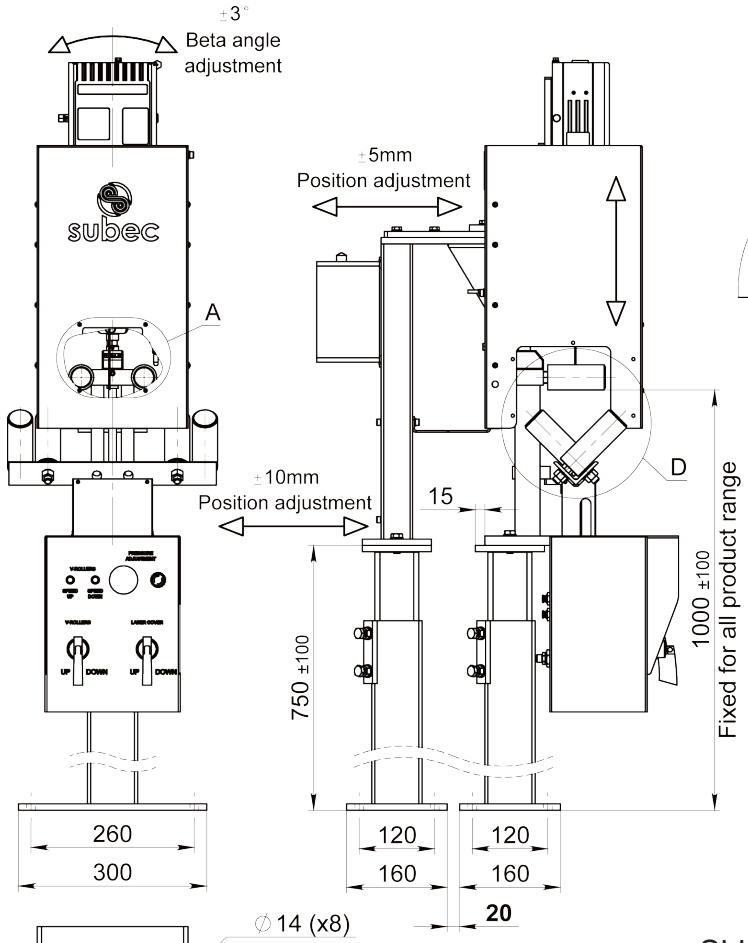

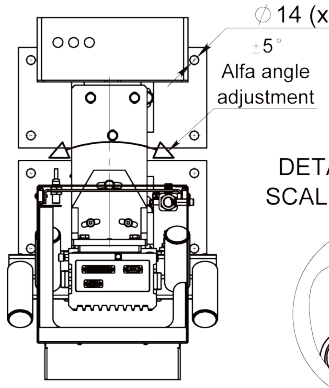

DETAIL A
SCALE 1 : 4

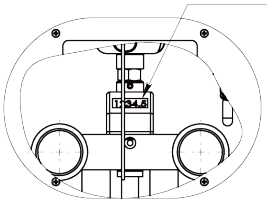

DETAIL D
SCALE 1 : 5

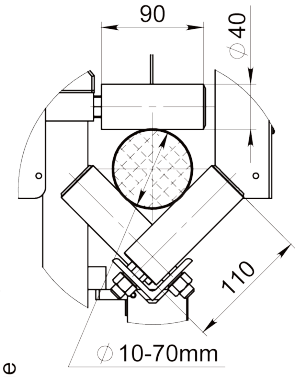

TLU - Top Line Unit

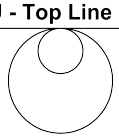

Laser Cover

Side skirts
Article: 15129



Article: 15018A

Article	Rollers	Pulley	Product range
11780A	2x Ø25 L50	Ø65mm	5-30mm
12445	2x Ø30m L70	Ø65mm	5-30mm
15018A	6x Ø40 L90	-	10-70mm
15146	4x Ø60 L150	-	20-100mm

Drawing No. 3-400946-00

Subec AB **Hesselmans Torg 5** **SE- 131 54 Nacka** **Sweden** **Phone: +46-8-88 46 33** **Email: info@subec.se** **Web: www.subec.se**

Copyright © 2026 Subec

MEASURING CONSOLE FOR LASER LENGTH COUNTERS, TLU

Pneumatic with automatic diameter adjustment
for contactless length measuring of longitudinal products

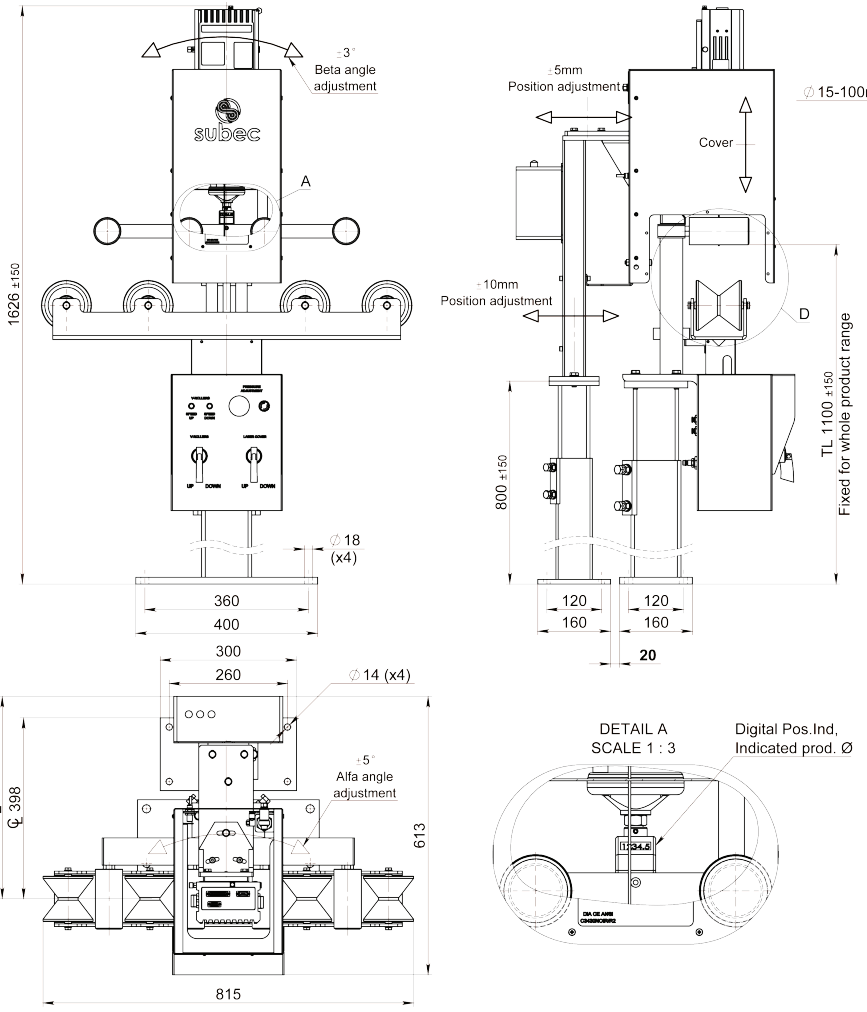

Article: 15421

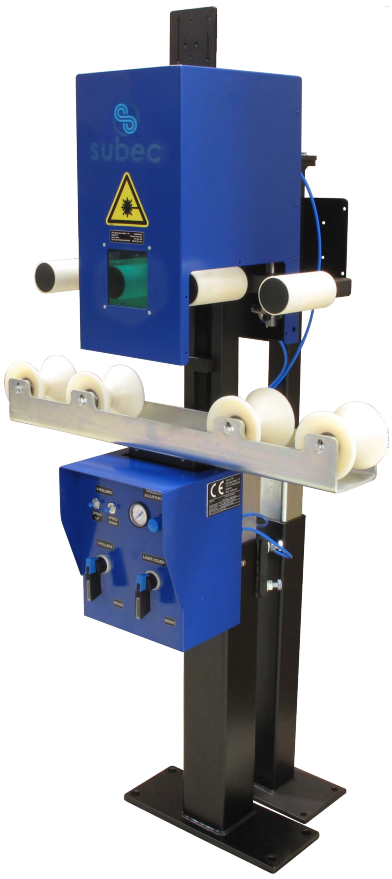

Article	Rollers	Pulley	Product range
15420	2x Ø60 L130	2x Ø43,5	15-100mm
15421	4x D60 L130	4x Ø43,5	15-100mm

Drawing No. 3-400972-00

Subec AB **Hesselmans Torg 5** **SE- 131 54 Nacka** **Sweden** **Phone: +46-8-88 46 33** **Email: info@subec.se** **Web: www.subec.se**

Copyright © 2026 Subec

LENGTH COUNTER, MS 1-25

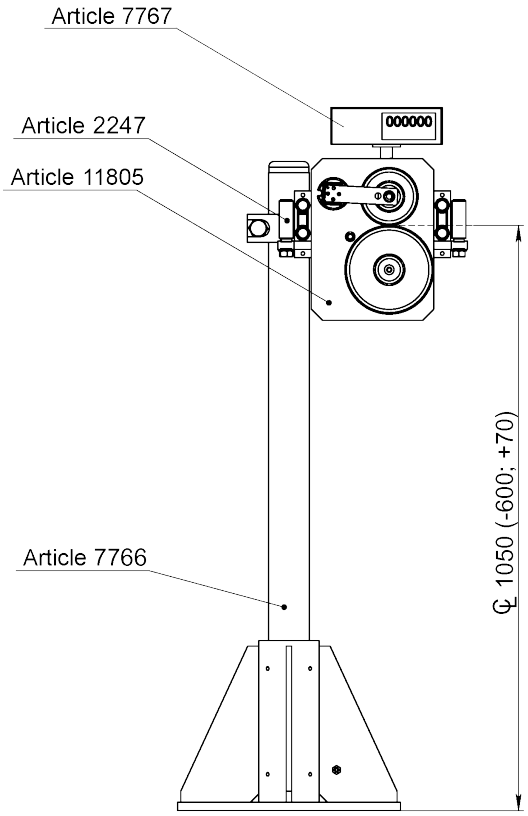

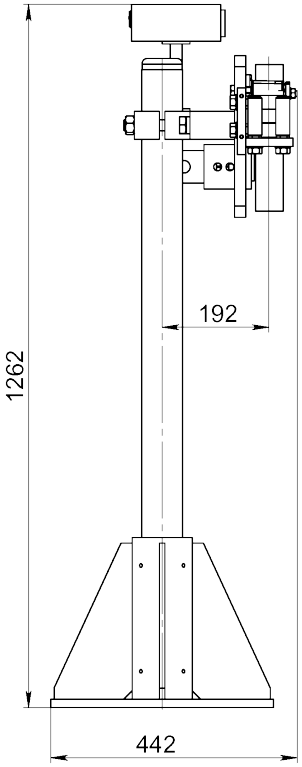

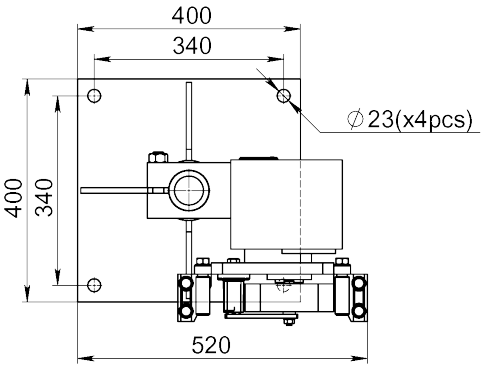

Article: 11805
Length Counter without stand, rollers or display

Article: 10776
Complete assembly

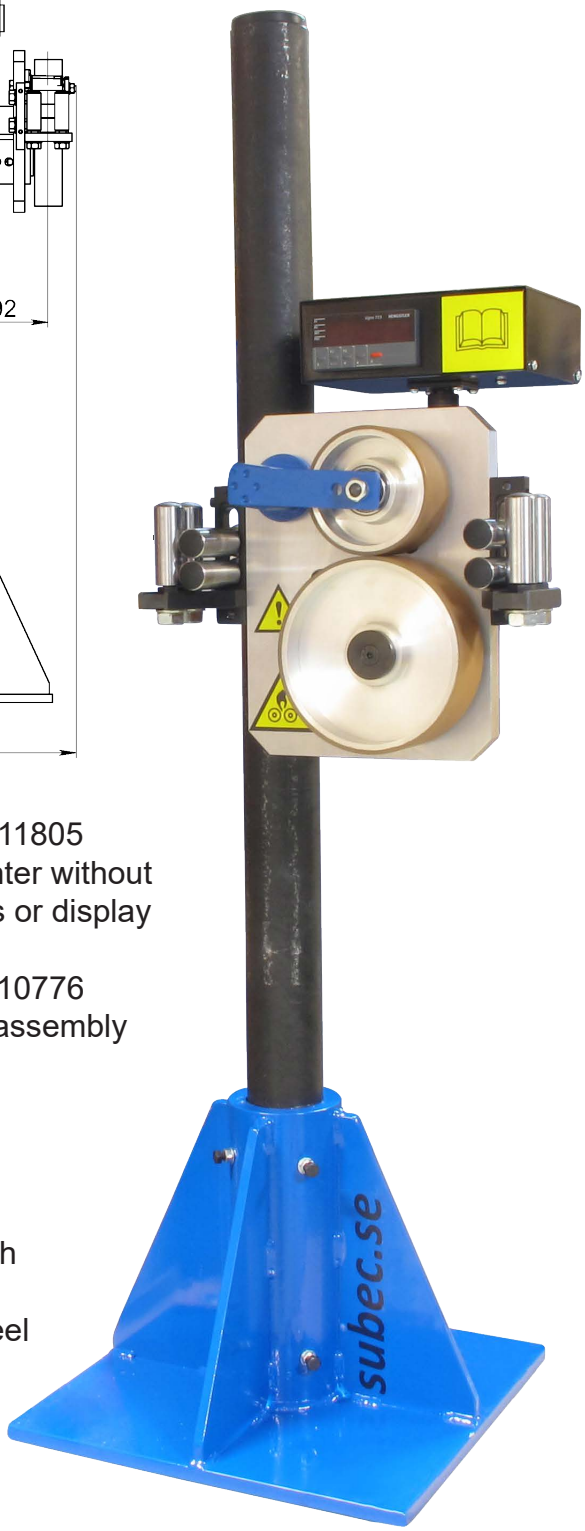



Article: 17185
Lenght measuring device with inlet roller guide and pressure-loaded encoder wheel

Drawing No. 3-400380-00

Subec AB **Hesselmans Torg 5** **SE- 131 54 Nacka** **Sweden** **Phone: +46-8-88 46 33** **Email: info@subec.se** **Web: www.subec.se**

Copyright © 2026 Subec

LENGTH COUNTER, MS 1-100

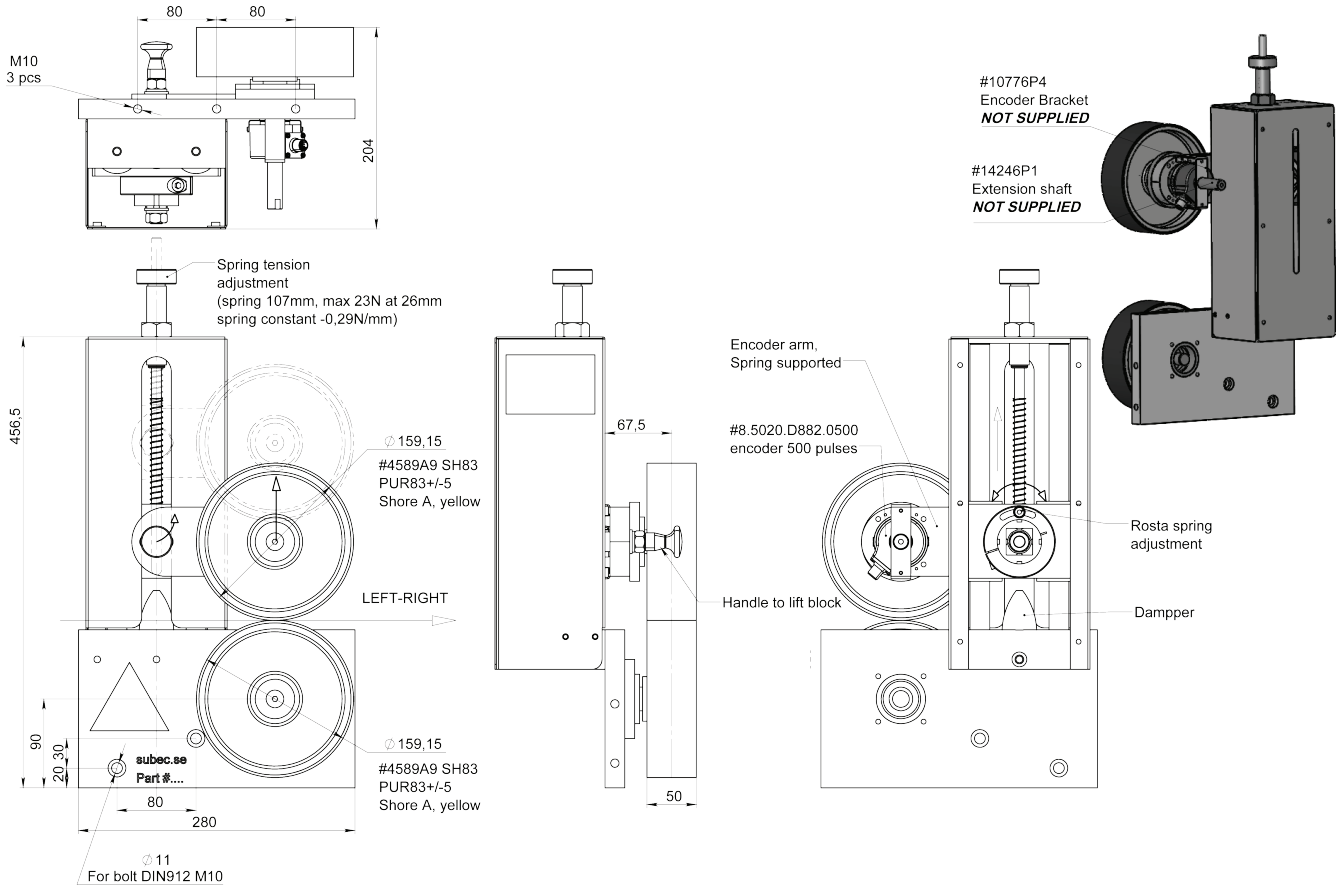

Length counter
Article: 15314

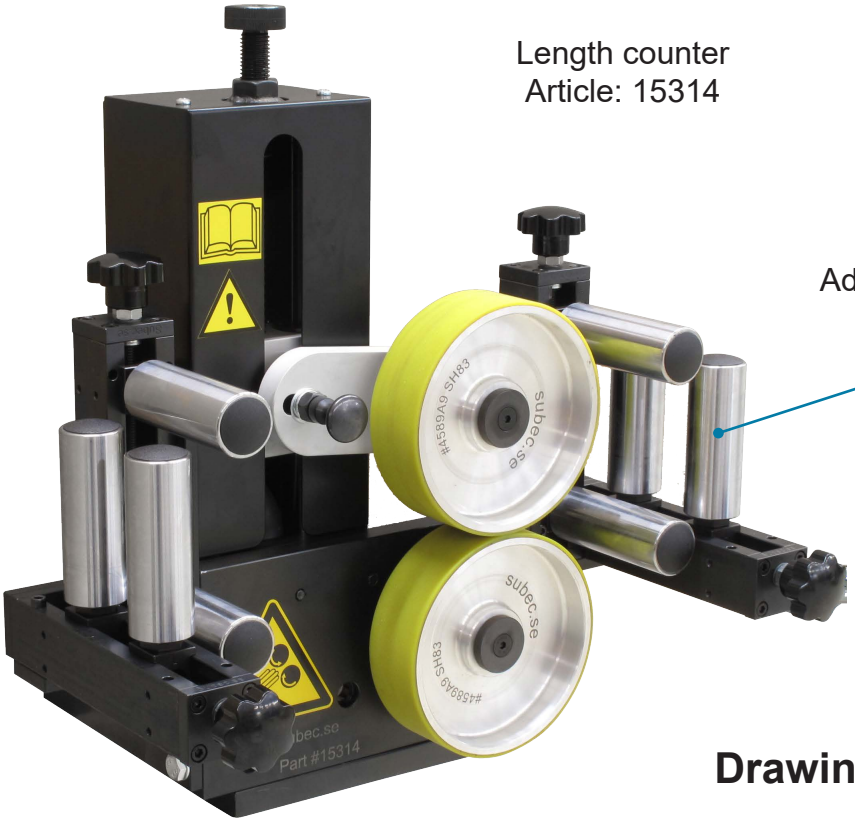

Adjustable roller cross
Article: 14973A

Drawing No. 3-401422-00

Subec AB **Hesselmans Torg 5** **SE- 131 54 Nacka** **Sweden** **Phone: +46-8-88 46 33** **Email: info@subec.se** **Web: www.subec.se**

Copyright © 2026 Subec

CUSTOMIZED LENGTH COUNTER MOUNTS



Article: 12574

Laser length counter for high speed lines and high precision measurement results.
Synchronized one-hand quad rotary guide unit.

Subec AB **Hesselmans Torg 5** **SE- 131 54 Nacka** **Sweden** **Phone: +46-8-88 46 33** **Email: info@subec.se** **Web: www.subec.se**

Copyright © 2026 Subec

TUBE WELDING JIG

3 axis adjustment and tilting

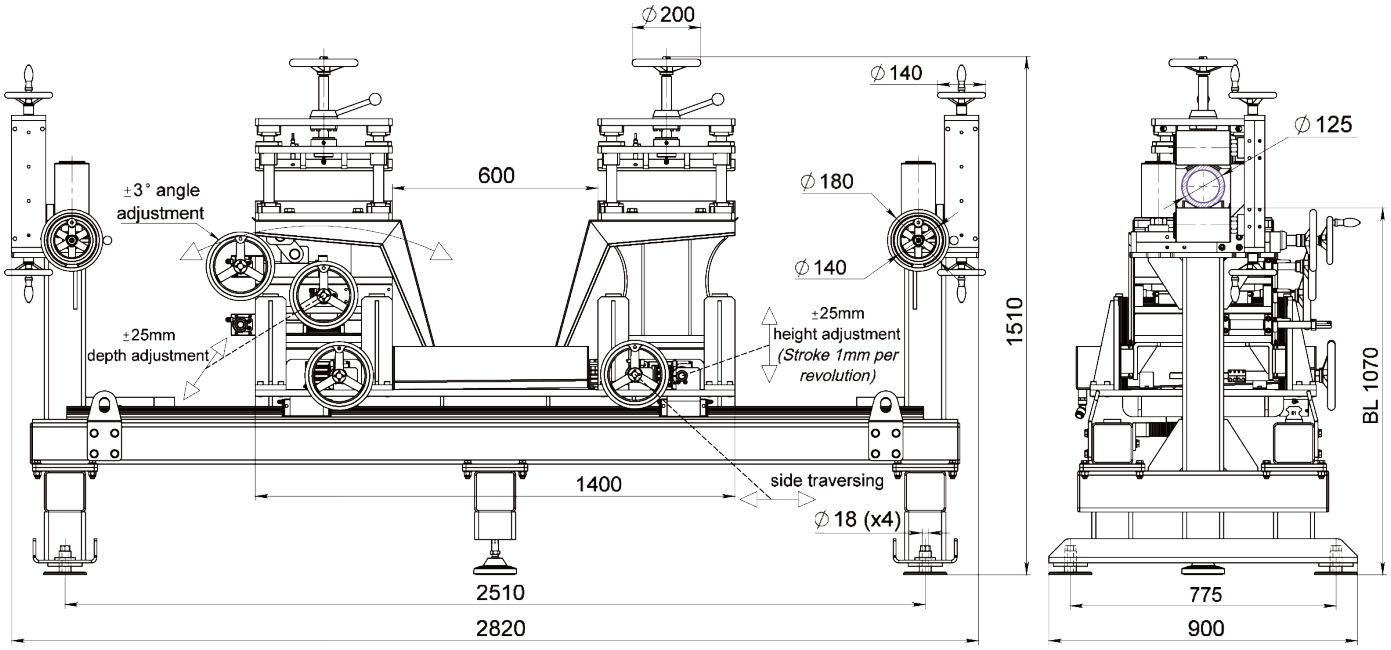



Article: 15299

Drawing No. 3-401435-00

Subec AB **Hesselmans Torg 5** **SE- 131 54 Nacka** **Sweden** **Phone: +46-8-88 46 33** **Email: info@subec.se** **Web: www.subec.se**

Copyright © 2026 Subec

TALCUM APPLICATION





Article: 04330

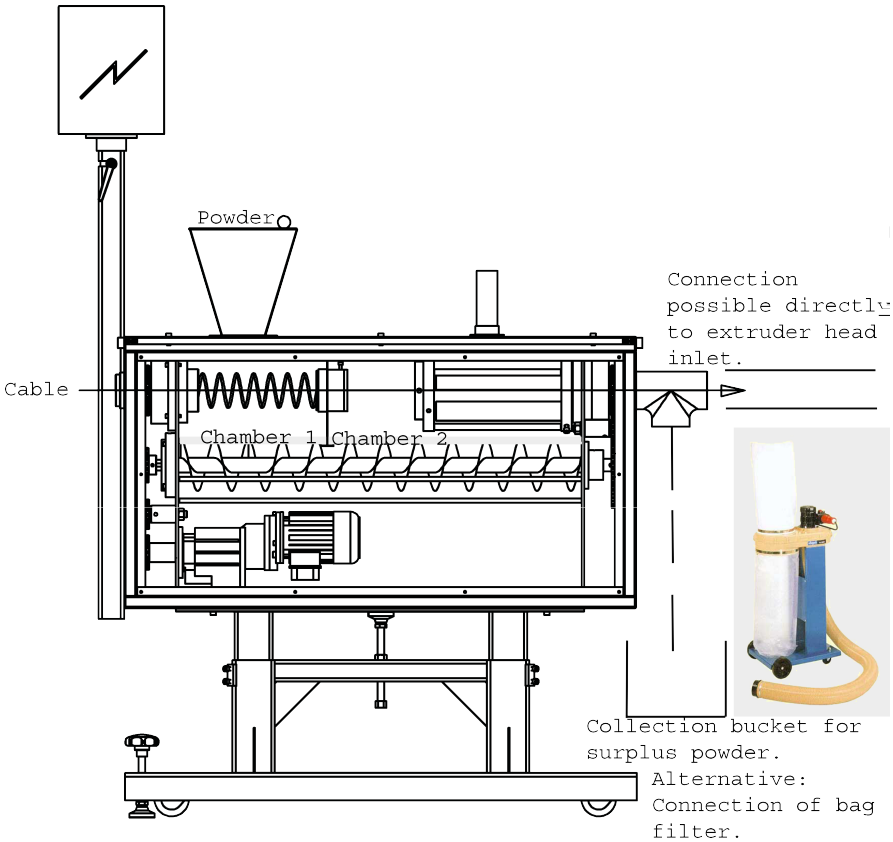



Drawing No. 3-400720-00

Subec AB **Hesselmans Torg 5** **SE- 131 54 Nacka** **Sweden** **Phone: +46-8-88 46 33** **Email: info@subec.se** **Web: www.subec.se**

Copyright © 2026 Subec

RE-SPOOLING MACHINE

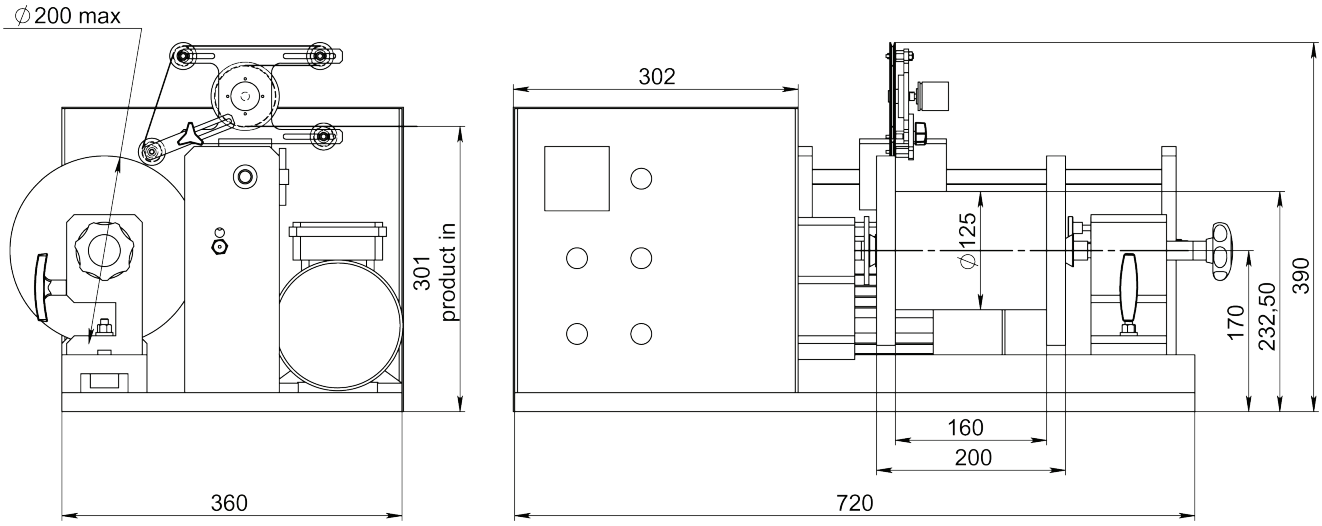

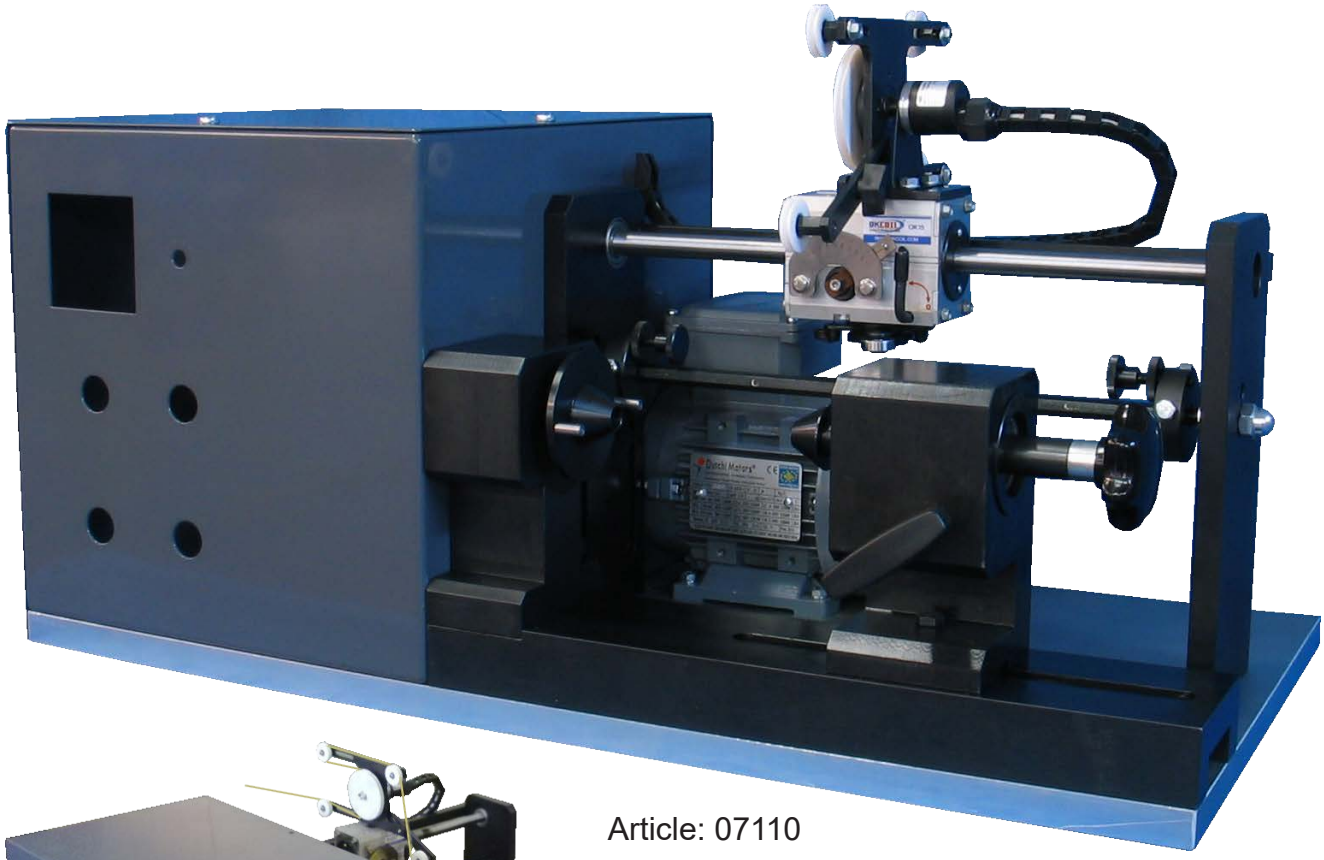



Article: 07110

Drawing No. 3-400912-00

Subec AB **Hesselmans Torg 5** **SE- 131 54 Nacka** **Sweden** **Phone: +46-8-88 46 33** **Email: info@subec.se** **Web: www.subec.se**

Copyright © 2026 Subec

BOXED WIRE - CABLE PACKAGING MACHINE



For flexible insulated cables, solid or strands, up to Ø 7mm.
Max production speed 1000 m/min.







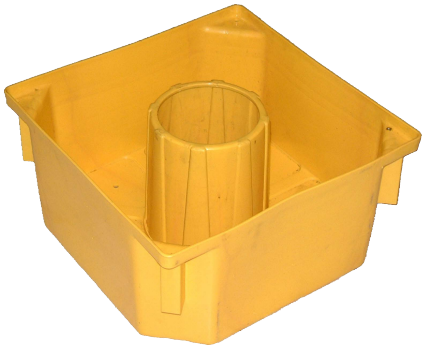

Drawing No. 3-300201-00

Subec AB **Hesselmans Torg 5** **SE- 131 54 Nacka** **Sweden** **Phone: +46-8-88 46 33** **Email: info@subec.se** **Web: www.subec.se**

Copyright © 2026 Subec

BARREL WINDER





The winder is for tube and cable packaging into octagon barrels.
For continuous operation. Big capacity.



Drawing No. 625-001

Subec AB
Hesselmans Torg 5
SE- 131 54 Nacka
Sweden
Phone: +46-8-88 46 33
Email: info@subec.se
Web: www.subec.se

Copyright © 2026 Subec

FLYER BOW

Material: Steel (52 HRC) or carbon fibre

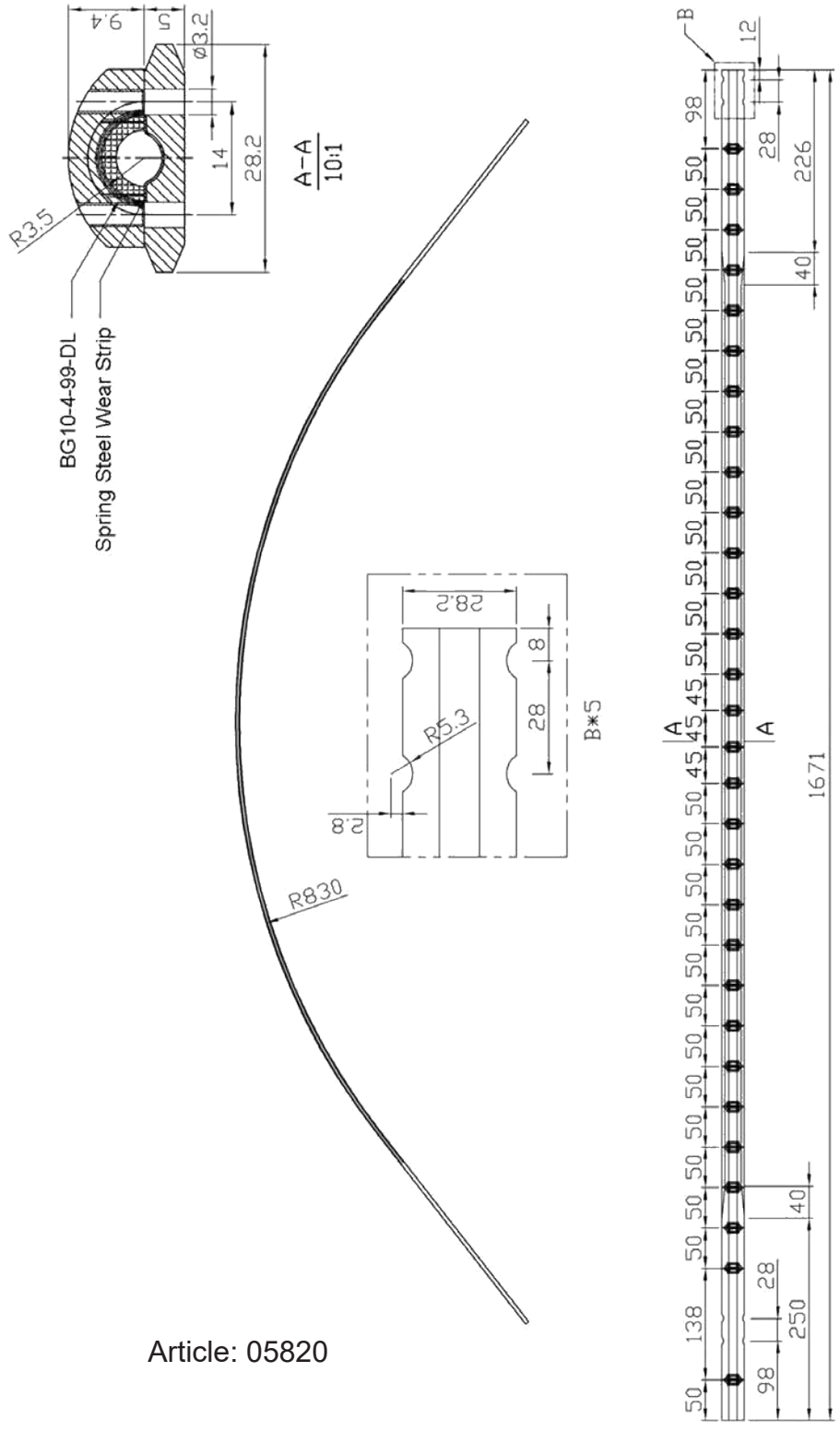

Article: 05820

Drawing No. 3-400846-00

Subec AB **Hesselmans Torg 5** **SE- 131 54 Nacka** **Sweden** **Phone: +46-8-88 46 33** **Email: info@subec.se** **Web: www.subec.se**

Copyright © 2026 Subec

FLYER BOW

Material: Steel (52 HRC) or carbon fibre

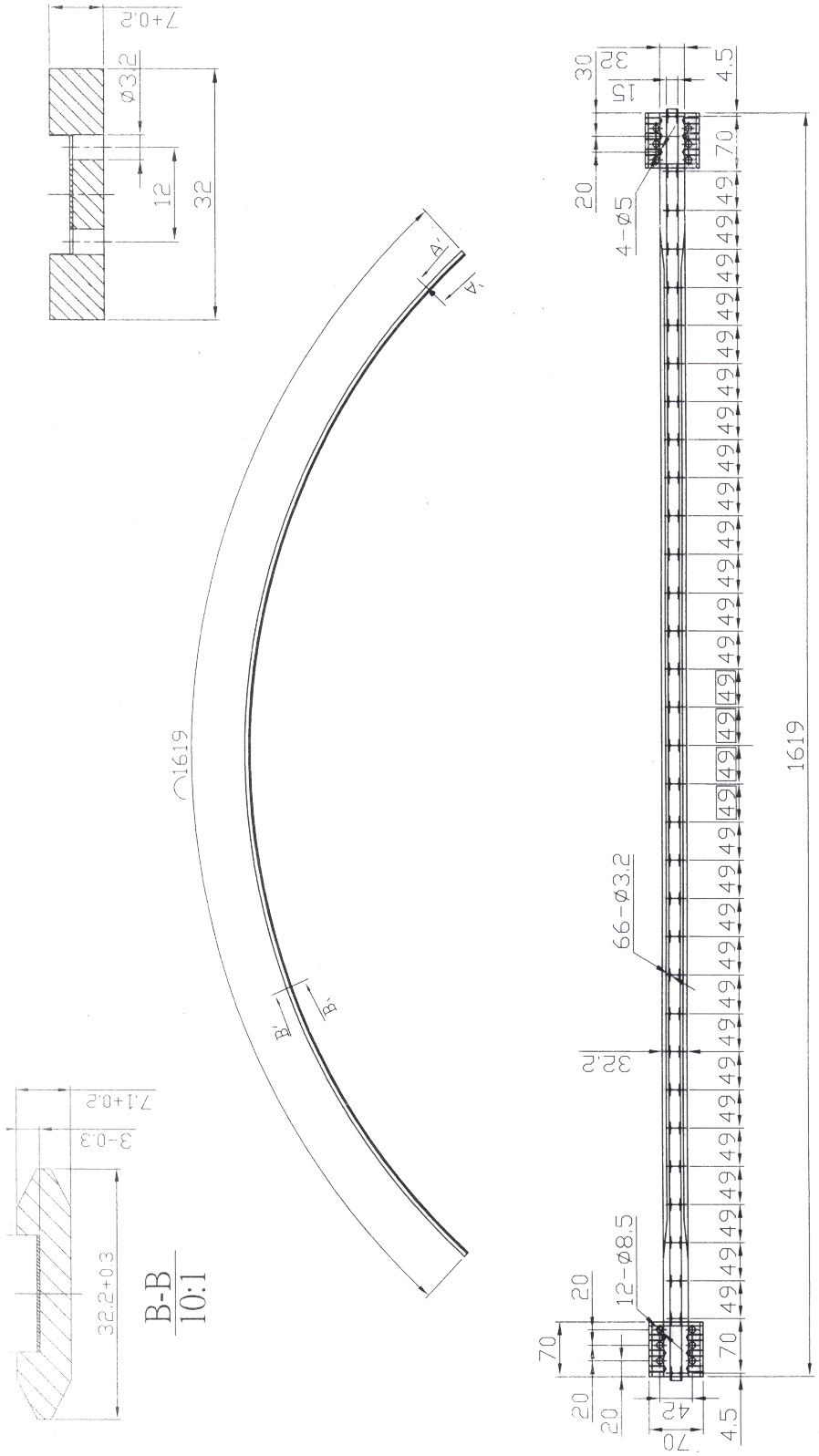

Drawing No. 3-400847-00

Subec AB **Hesselmans Torg 5** **SE- 131 54 Nacka** **Sweden** **Phone: +46-8-88 46 33** **Email: info@subec.se** **Web: www.subec.se**

Copyright © 2026 Subec

BUNCHER BOW

Material: Carbon fibre

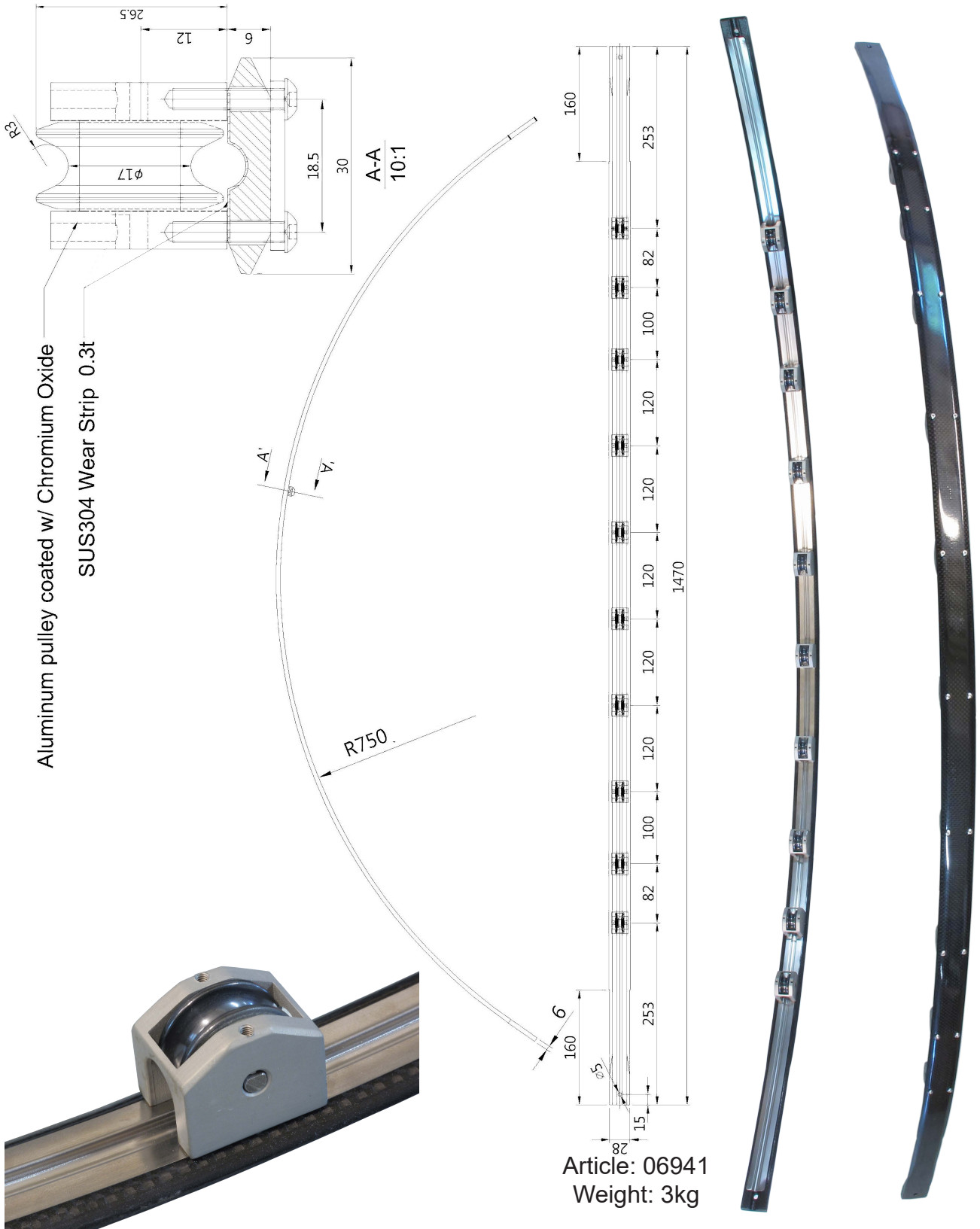

Article: 06941
Weight: 3kg

Drawing No. 3-400890-00

Subec AB **Hesselmans Torg 5** **SE- 131 54 Nacka** **Sweden** **Phone: +46-8-88 46 33** **Email: info@subec.se** **Web: www.subec.se**

Copyright © 2026 Subec

BUNCHER BOW

Material: Carbon fibre

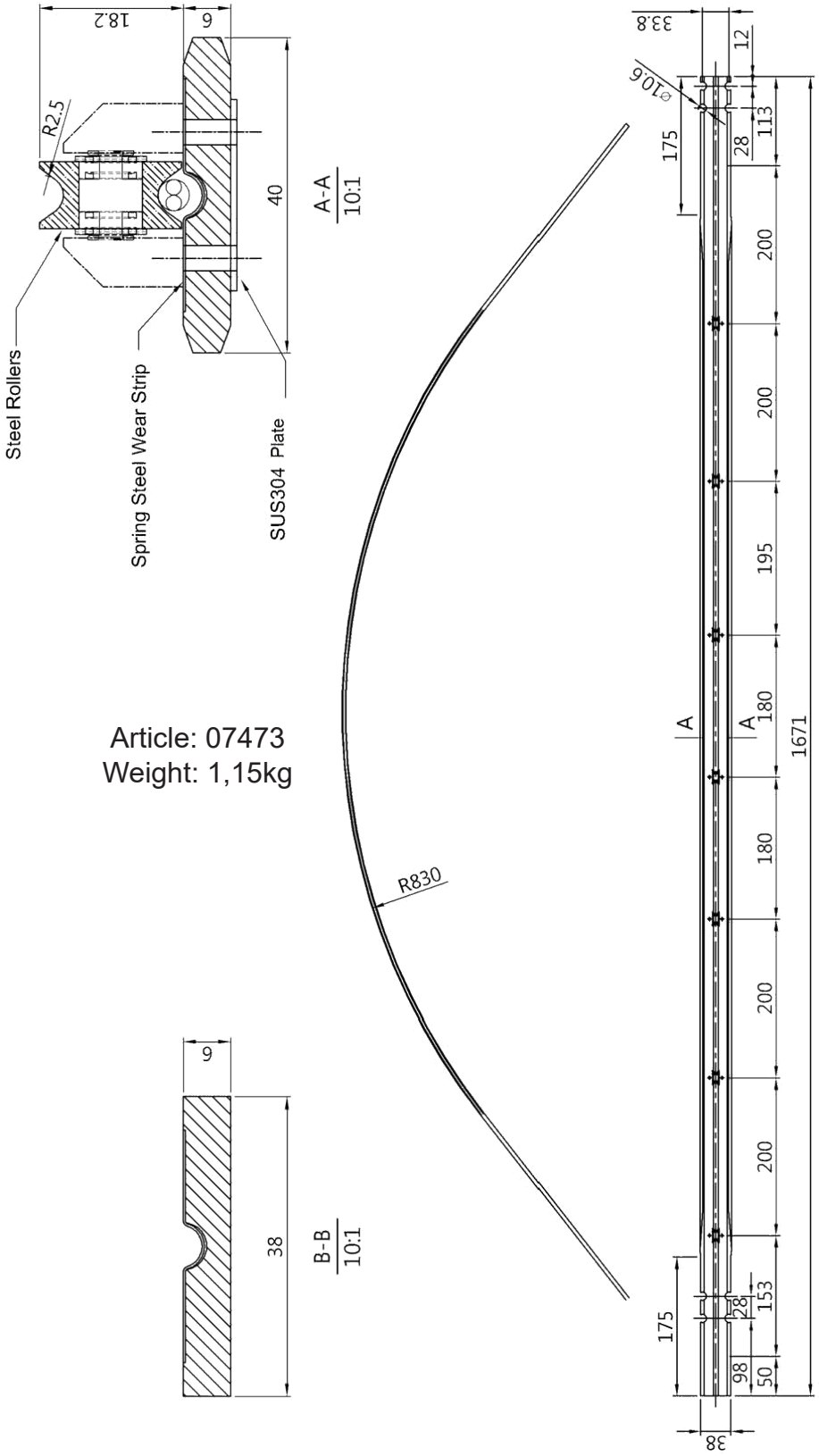

Article: 07473
Weight: 1,15kg

Drawing No. 3-401189-00

Subec AB **Hesselmans Torg 5** **SE- 131 54 Nacka** **Sweden** **Phone: +46-8-88 46 33** **Email: info@subec.se** **Web: www.subec.se**

Copyright © 2026 Subec

BUNCHER BOW, ACCESSORIES

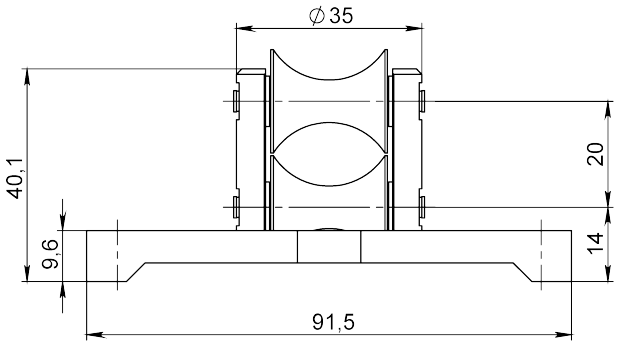

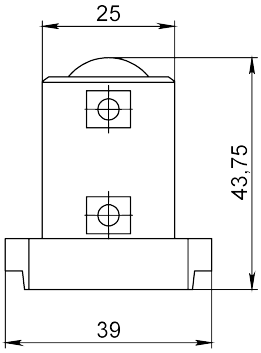

Article: 9541

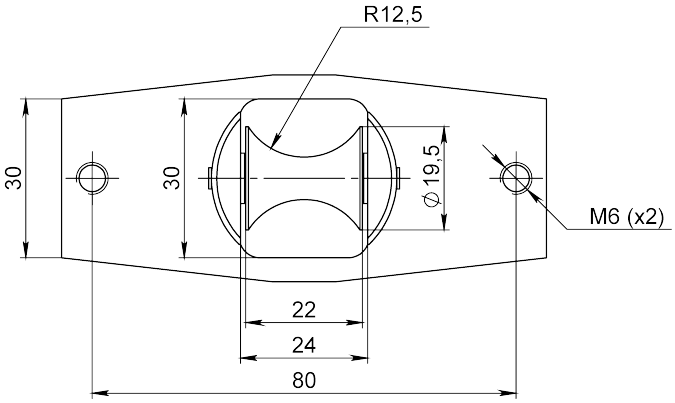

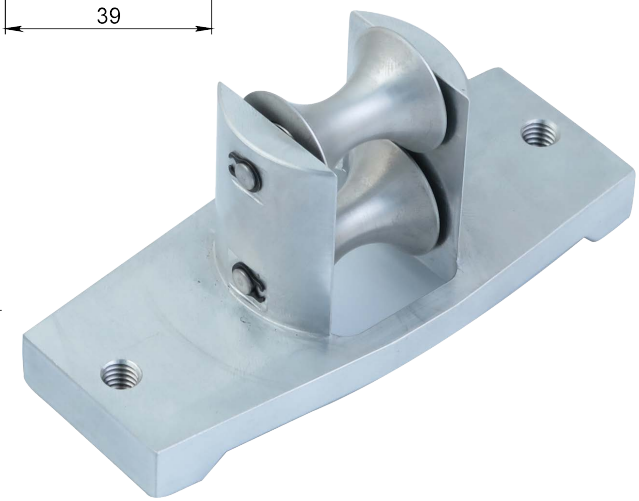

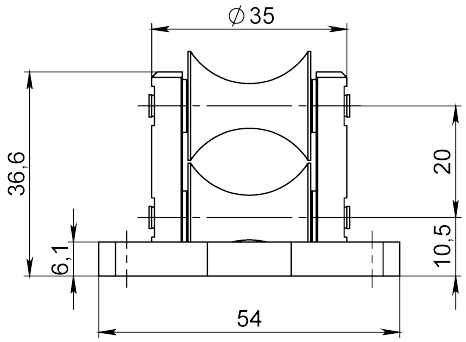

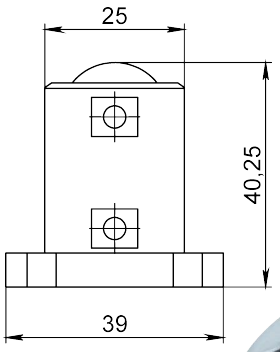

Article: 9542*

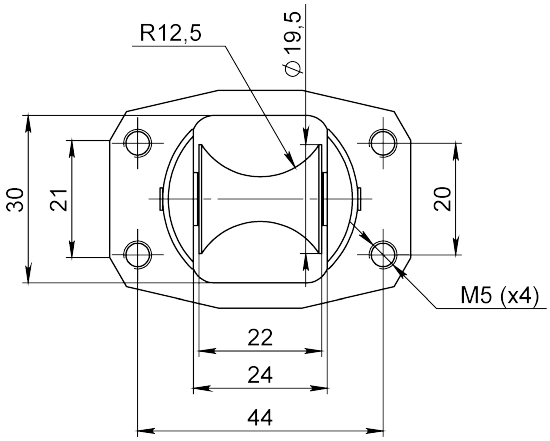

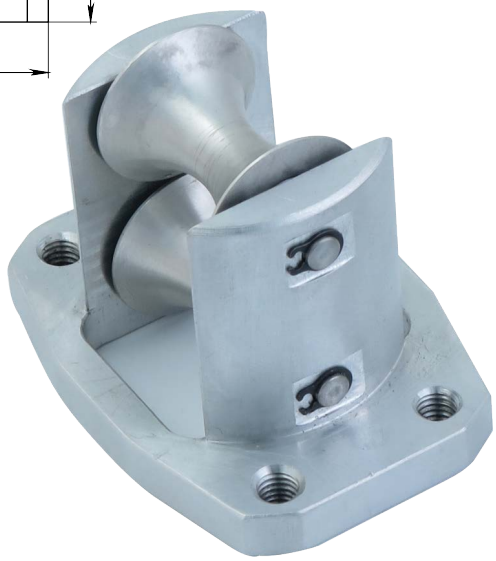

Drawing No. 3-400668-00

* Stock item

Subec AB **Hesselmans Torg 5** **SE- 131 54 Nacka** **Sweden** **Phone: +46-8-88 46 33** **Email: info@subec.se** **Web: www.subec.se**

Copyright © 2026 Subec

BUNCHER BOW, ACCESSORIES

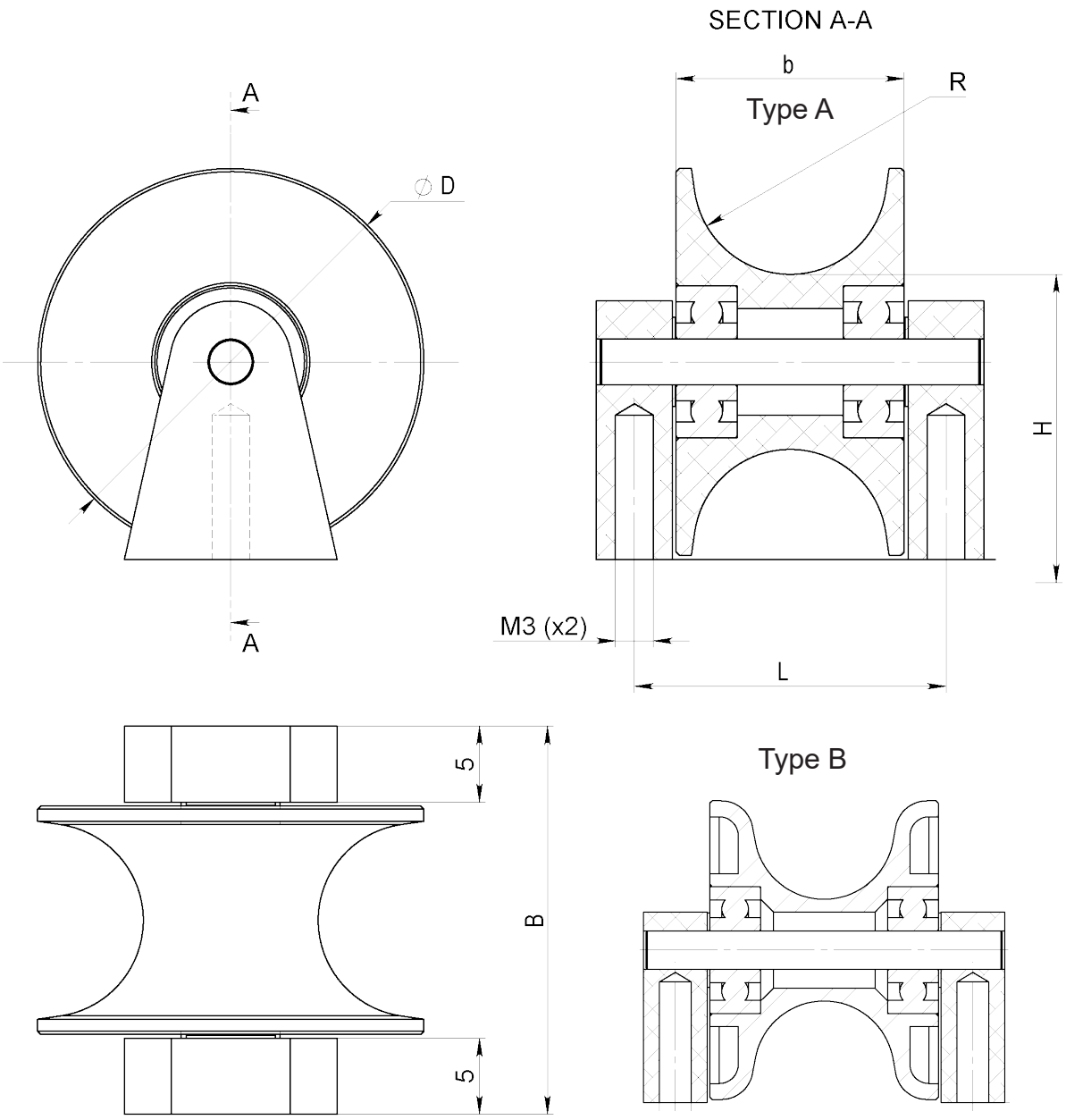

Article	D	b	B	R	H	L	Type	Material
12810	23,5	18	28,5	5,5	16	23,5	B	ALU + Zr_2O_3 Coating
12780	23,5	18	28,5	5,5	16	23,5	B	Steel HRC 55
17297	25.4	14.5	25.5	4.35	20.25	20.5	B	Solid Zr_2O_3
12594*	25,4	15	25,5	6,35	20,25	20,5	A	ALU + Zr_2O_3 Coating

Drawing No. 3-401319-00

* Stock item

Subec AB **Hesselmans Torg 5** **SE- 131 54 Nacka** **Sweden** **Phone: +46-8-88 46 33** **Email: info@subec.se** **Web: www.subec.se**

Copyright © 2026 Subec

BUNCHER BOW, ACCESSORIES

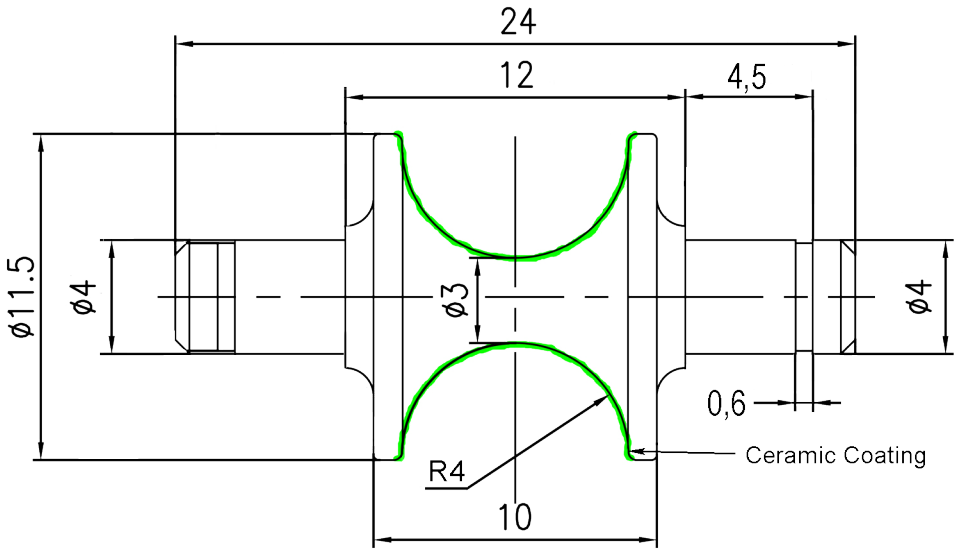

Article: 11743*
Material: ALU

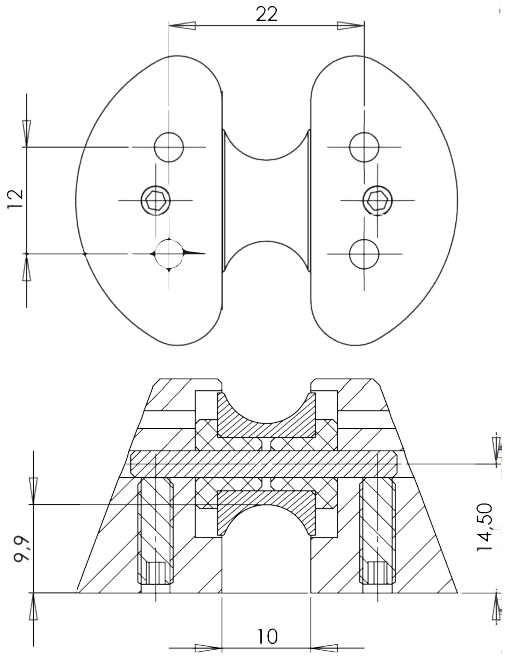



Article: 14233*
Consists of holder (Article: 08874) and roller (Article: 08873)

More information on request

* Stock item

Subec AB **Hesselmans Torg 5** **SE- 131 54 Nacka** **Sweden** **Phone: +46-8-88 46 33** **Email: info@subec.se** **Web: www.subec.se**

Copyright © 2026 Subec

BUNCHER BOW, ACCESSORIES

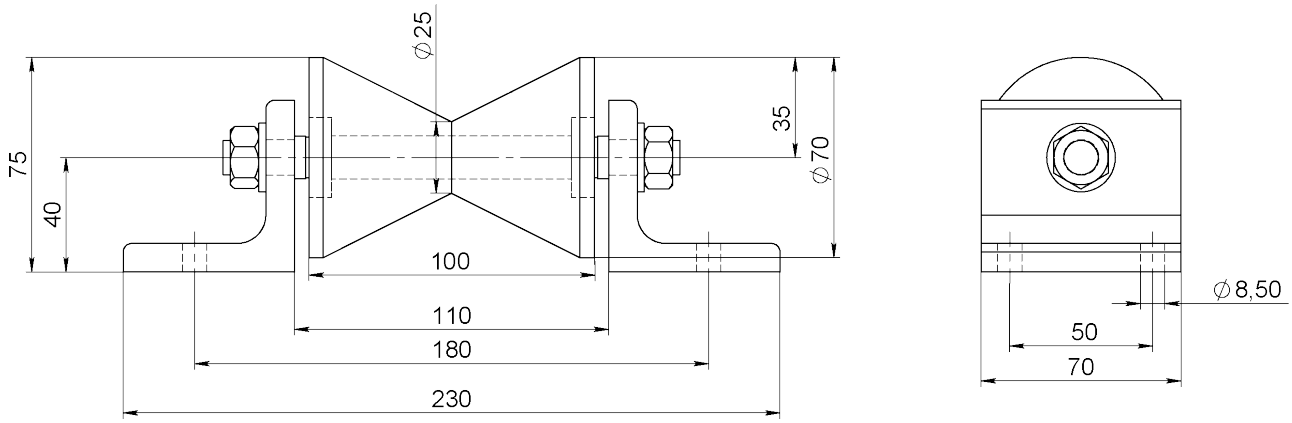

Article: 12274
Material: POM

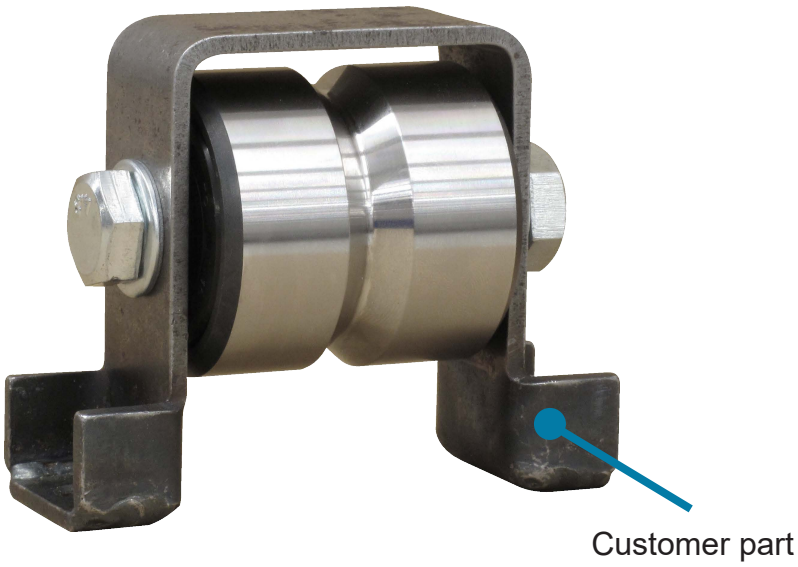

Article: 11164*

More information on request

* Stock item

Subec AB **Hesselmans Torg 5** **SE- 131 54 Nacka** **Sweden** **Phone: +46-8-88 46 33** **Email: info@subec.se** **Web: www.subec.se**

Copyright © 2026 Subec

CABLE STRIPPER HEAD

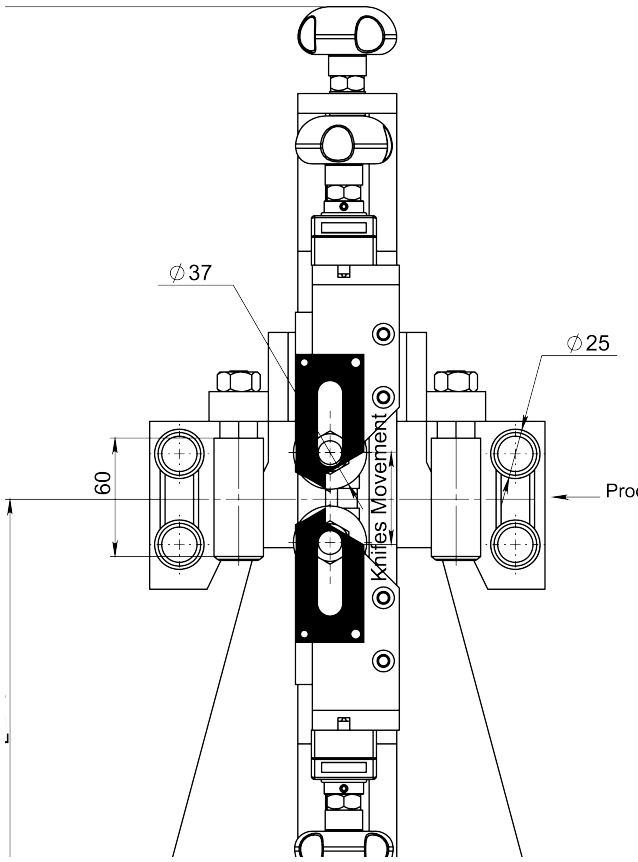

Article: 04677
Example of application with nipple and roller cross for flexible and small cable diameter (Shown on the right)

Article: 06521
Stripper head without inlet and outlet guides
(See options below)

Option: Outlet roller cross
Article: 02247

Option: Inlet bushing in steel
Article: 06523

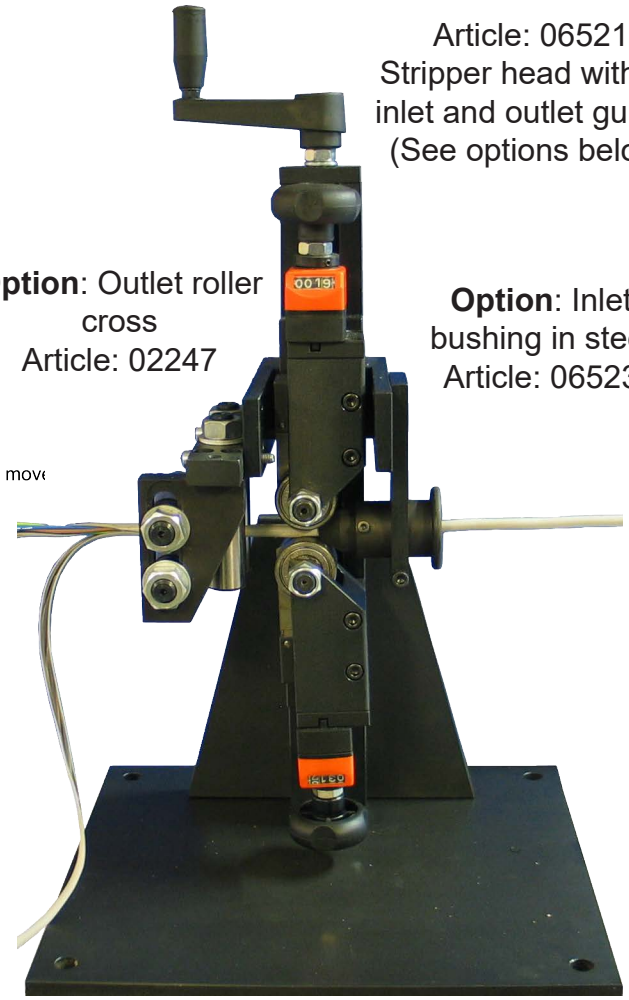

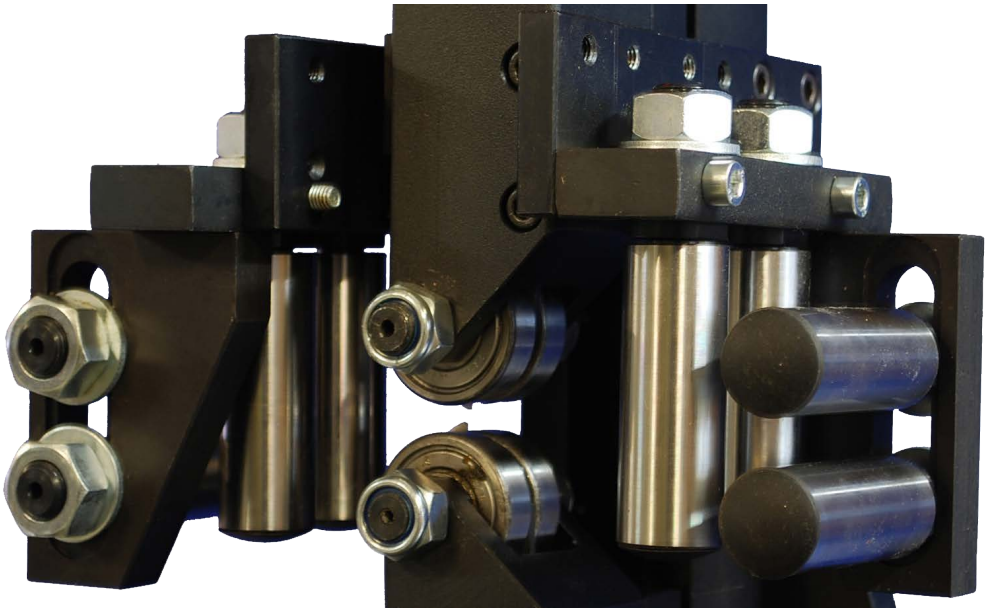

Article 02247
Roller Setup for stiff and larger Cable diameter with 2 roller crosses

Drawing No. 3-400767-00

Subec AB **Hesselmans Torg 5** **SE- 131 54 Nacka** **Sweden** **Phone: +46-8-88 46 33** **Email: info@subec.se** **Web: www.subec.se**

Copyright © 2026 Subec

CABLE STRIPPER HEAD KIT

Slitter block, Pair
Article: 05481*



Slitter block guide system
Article: 05485*
Weight: 3,28kg

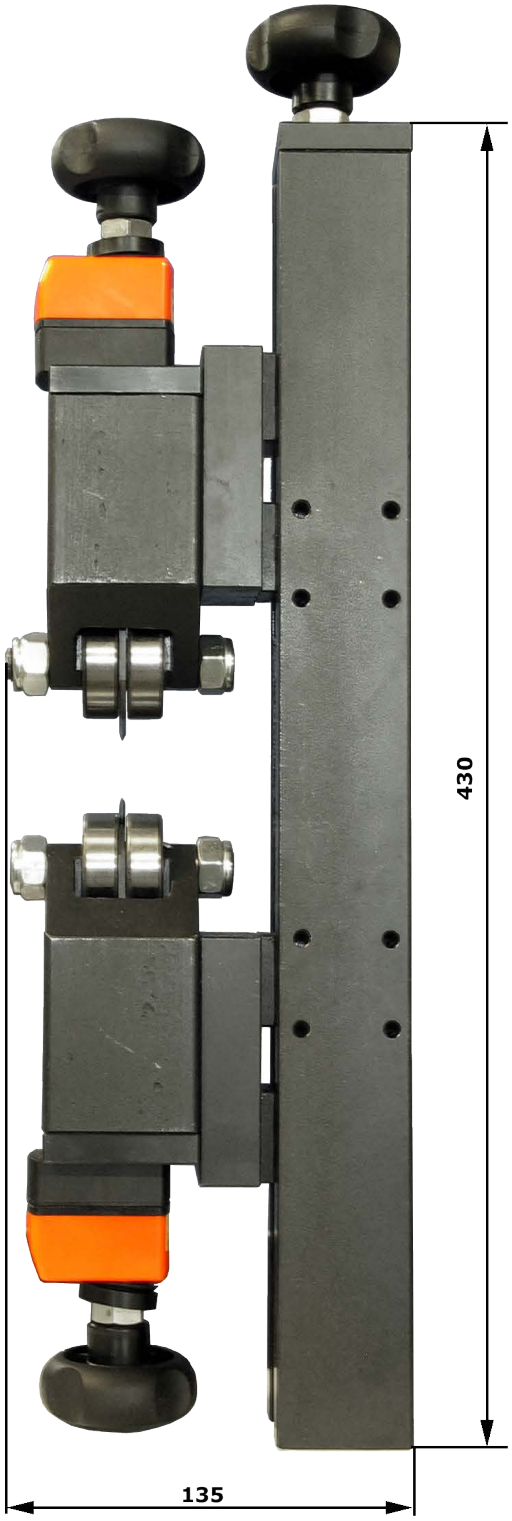

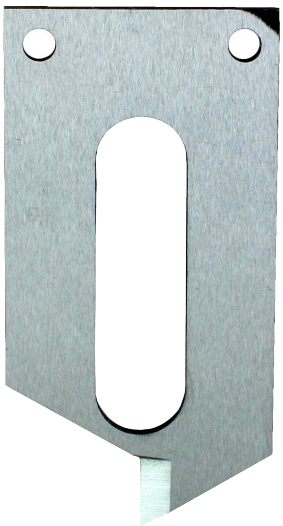

Slitter Knife
Article: 05082*

Drawing No. 3-400767-00

* Stock item

Subec AB **Hesselmans Torg 5** **SE- 131 54 Nacka** **Sweden** **Phone: +46-8-88 46 33** **Email: info@subec.se** **Web: www.subec.se**

Copyright © 2026 Subec

CABLE STRIPPER FOR FLAT AND ROUND PRODUCTS

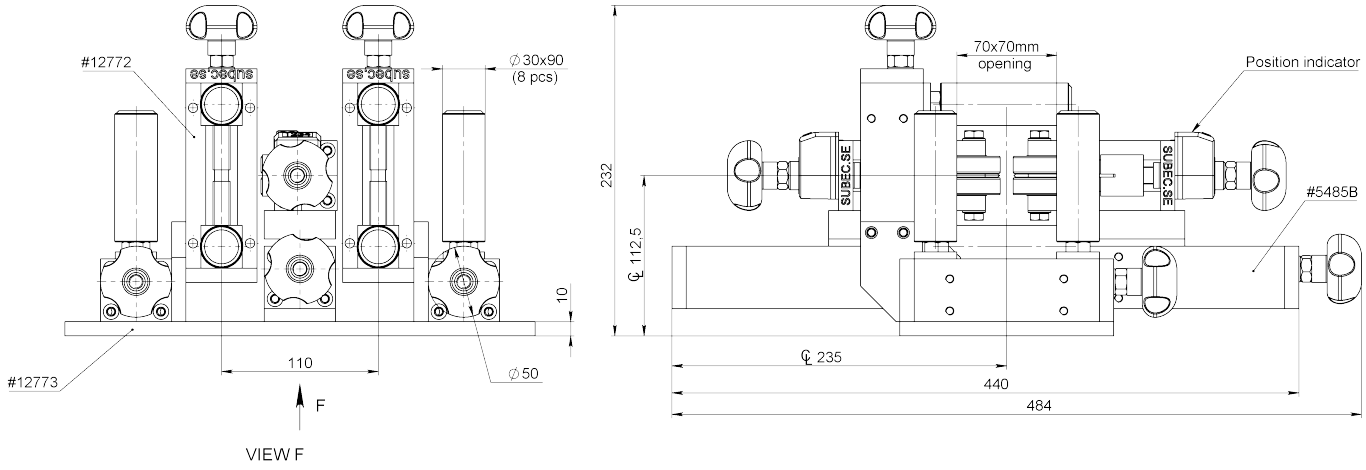

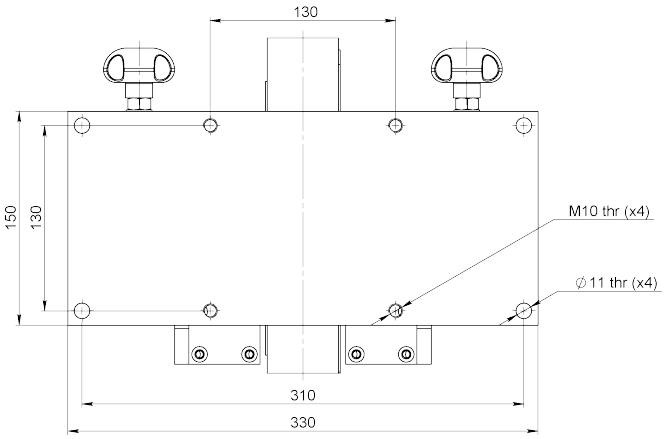

Article: 12726

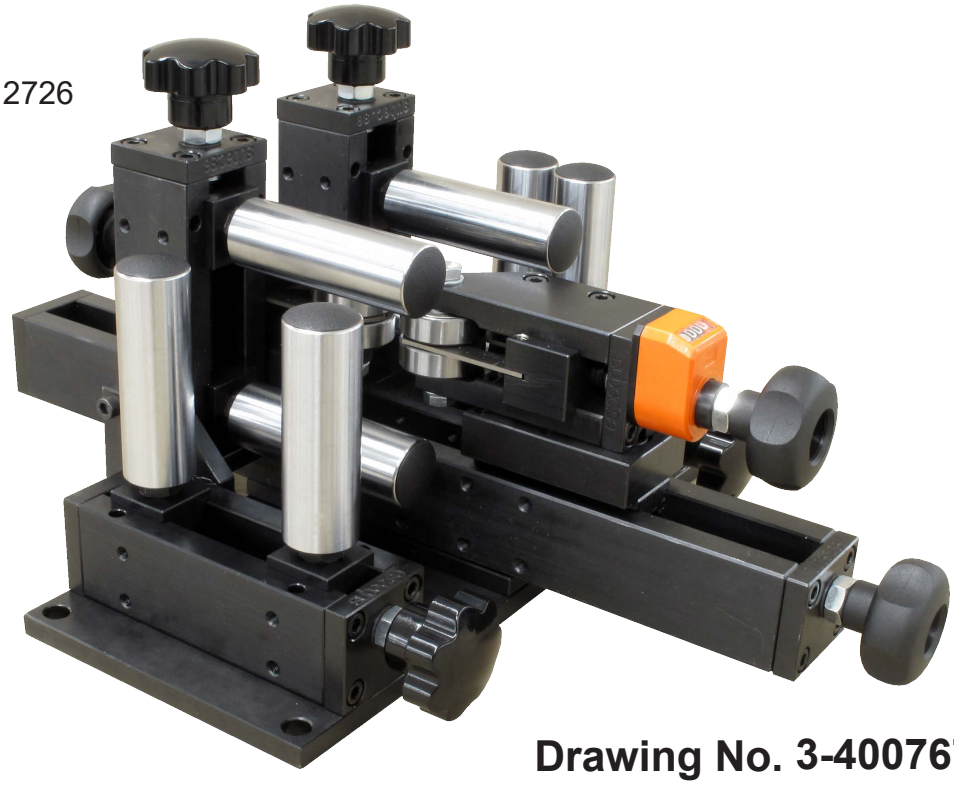

Drawing No. 3-400767-00

Subec AB **Hesselmans Torg 5** **SE- 131 54 Nacka** **Sweden** **Phone: +46-8-88 46 33** **Email: info@subec.se** **Web: www.subec.se**

Copyright © 2026 Subec

CABLE STRIPPER WITH GUIDING NIPPLE

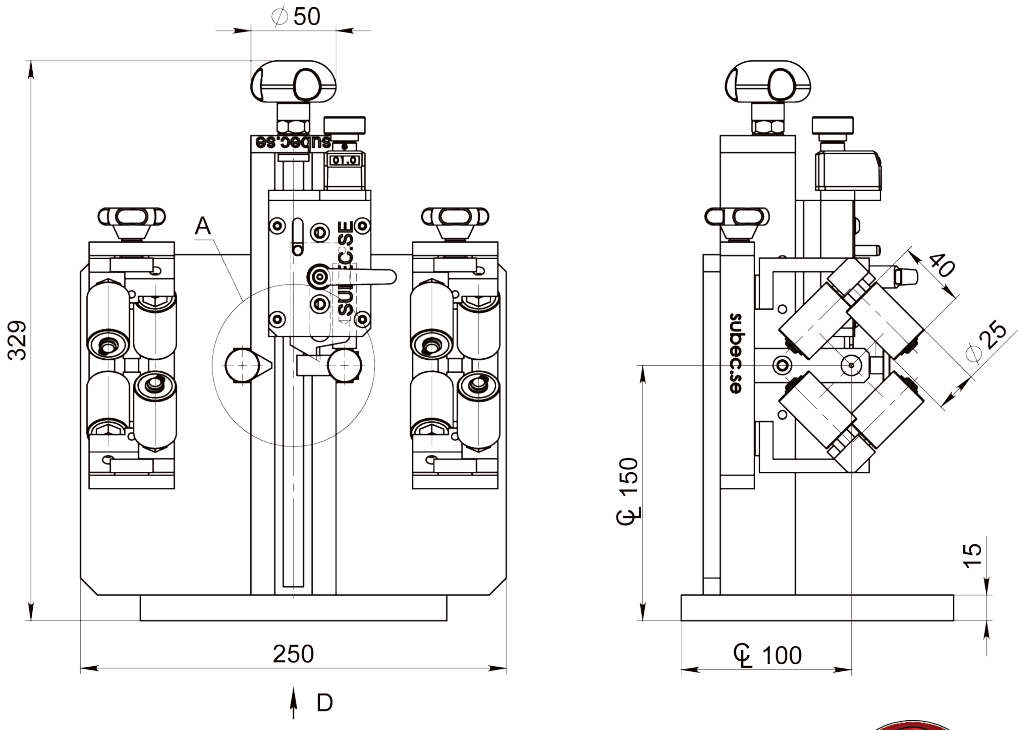

VIEW D

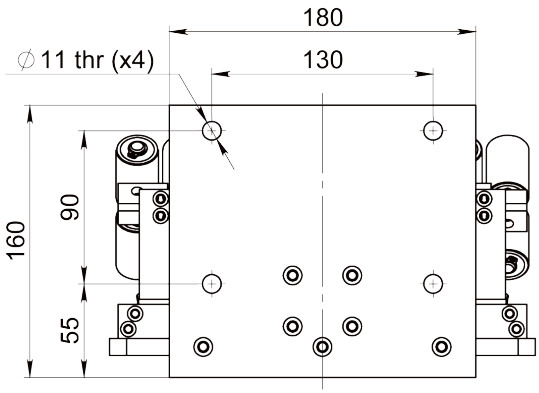

Article: 16873

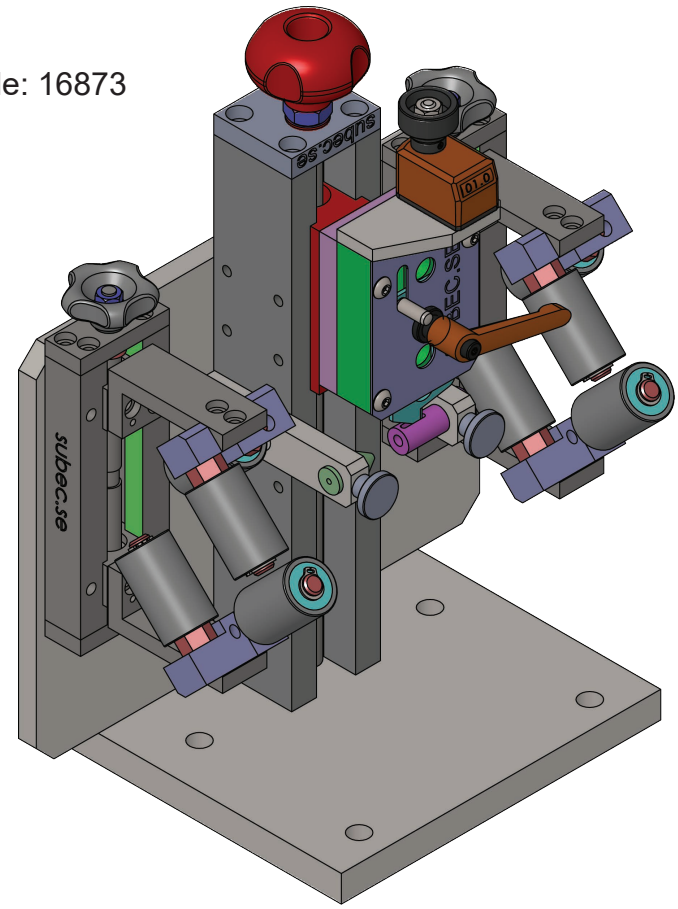

Note:
Adjustable rollers crosses of various designs are optional.

Also available with iris guides for small cable diameters (0-5mm)
Article: 19449

Drawing No. 3-400767-00

Subec AB **Hesselmans Torg 5** **SE- 131 54 Nacka** **Sweden** **Phone: +46-8-88 46 33** **Email: info@subec.se** **Web: www.subec.se**

Copyright © 2026 Subec

CABLE JACKET STRIPPER & PULLERS

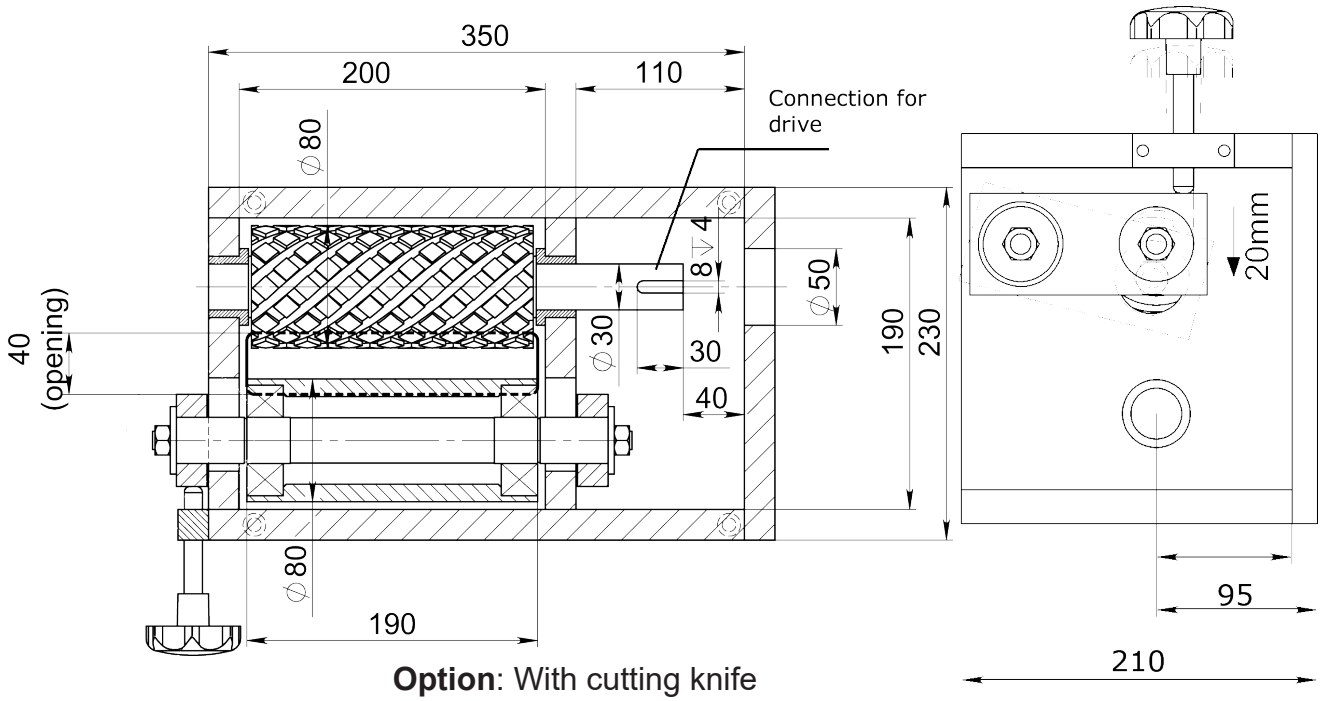

Option: With cutting knife
Article: 07692
Weight: 90kg



Example of implementation





Article: 07037
Weight: 64kg

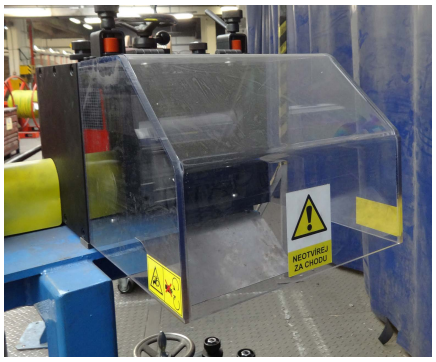

Drawing No. 3-400904-00

Subec AB **Hesselmans Torg 5** **SE- 131 54 Nacka** **Sweden** **Phone: +46-8-88 46 33** **Email: info@subec.se** **Web: www.subec.se**

Copyright © 2026 Subec

CABLE JACKET STRIPPER & PULLER

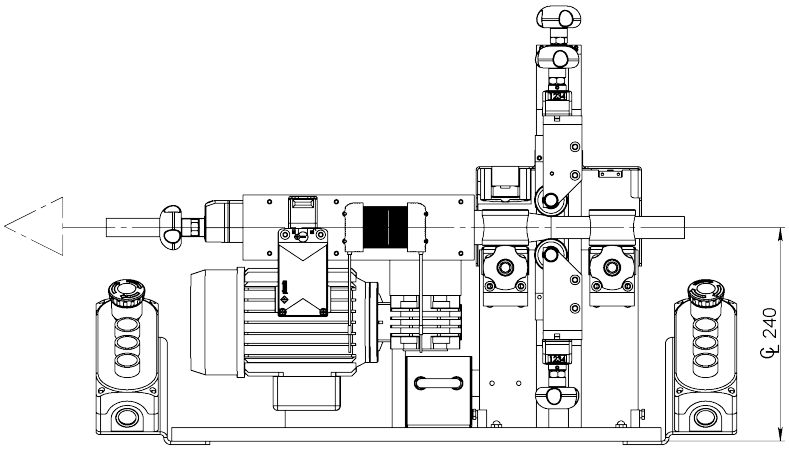

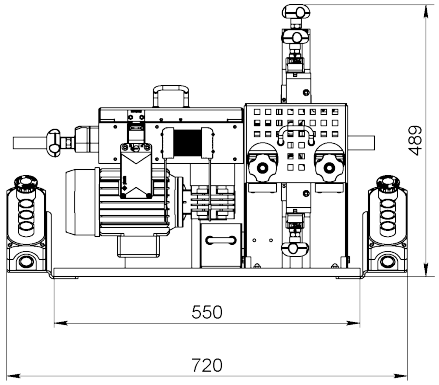

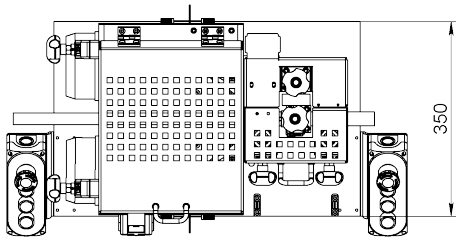

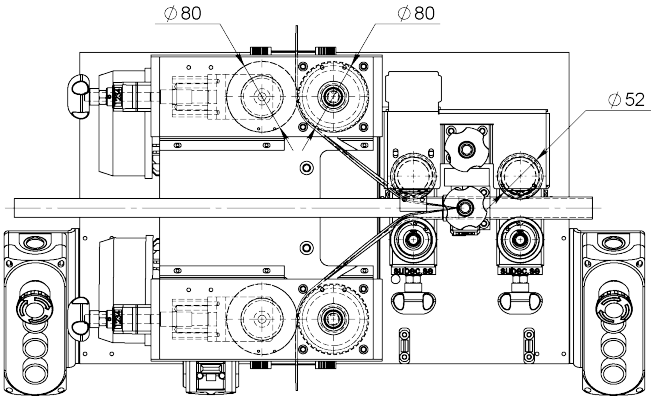

Article: 12587

For more information please see the following video:

https://www.youtube.com/watch?v=ppLh3YGGEFI

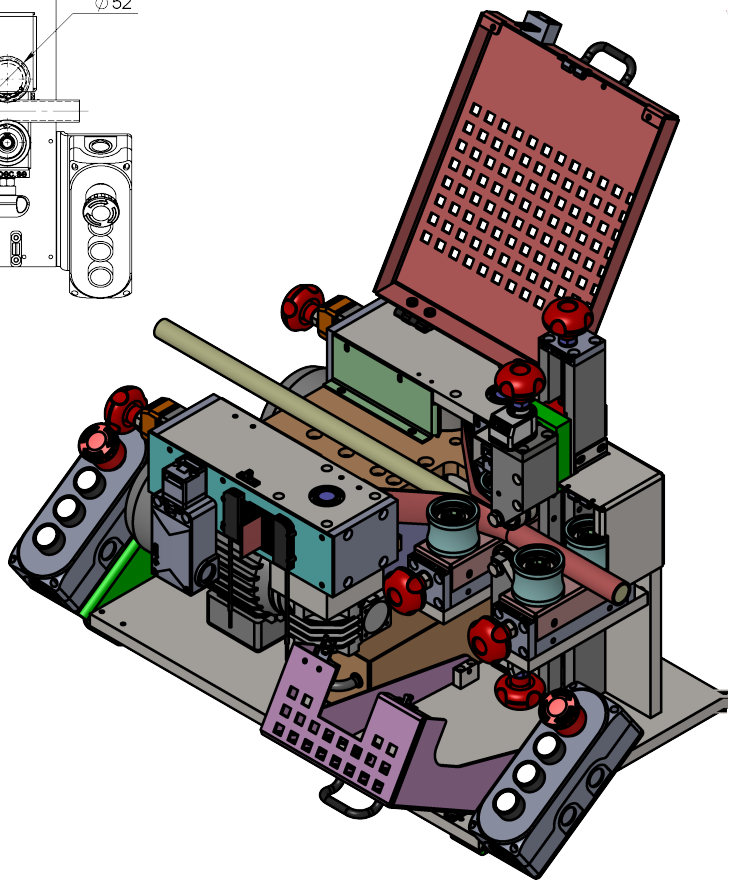

Drawing No. 9-100003-01

Subec AB **Hesselmans Torg 5** **SE- 131 54 Nacka** **Sweden** **Phone: +46-8-88 46 33** **Email: info@subec.se** **Web: www.subec.se**

Copyright © 2026 Subec

CABLE JACKET STRIPPER, SHREDDER & PULLER

Product range: 2-30mm

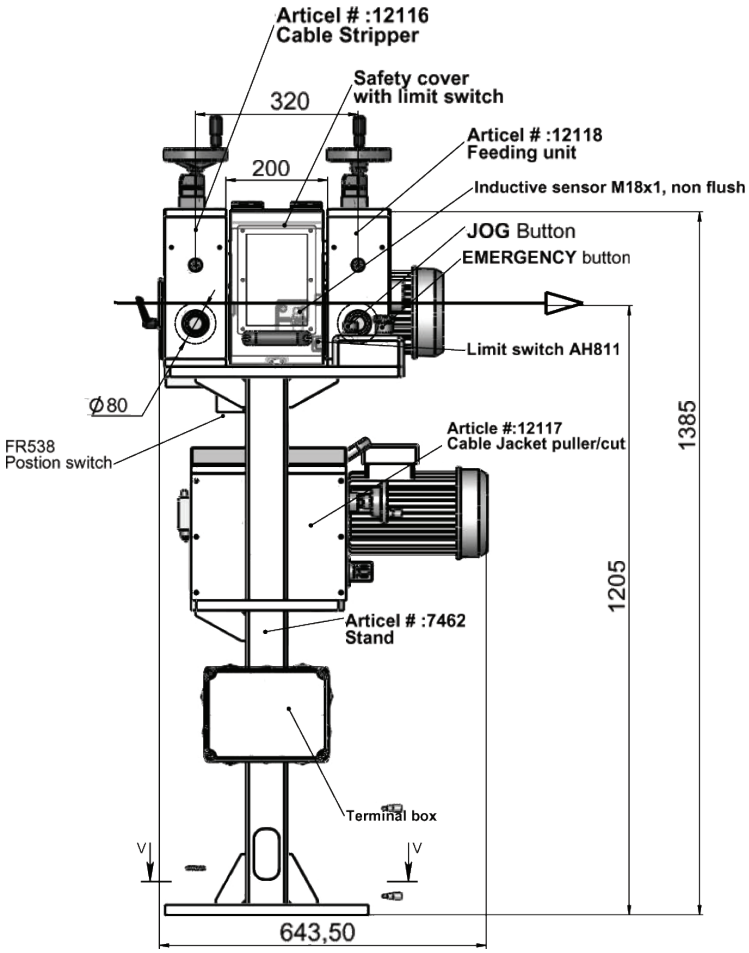

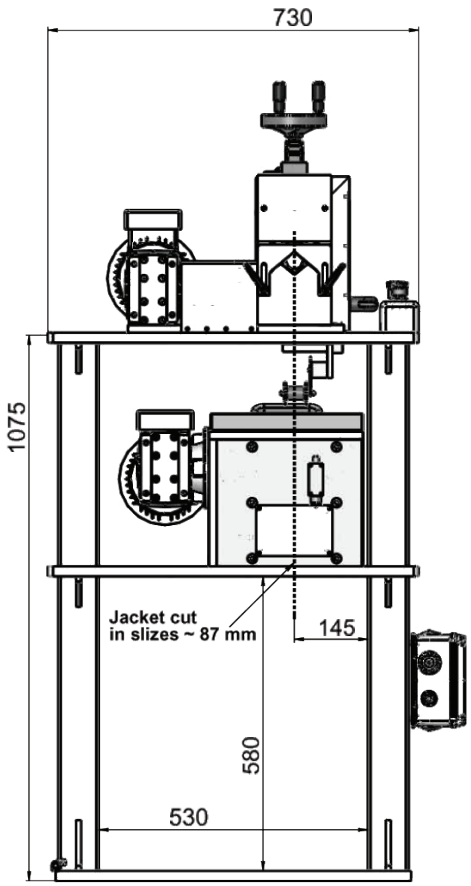

Article: 12307

Info:
The slitter knives are placed exactly between two guiding rollers and the knives depth towards the cable is individually adjustable via small hand wheels and a depth indicator grants the setting.

The upper and lower slitter knife blocks can be symmetrically opened via a hand wheel when inserting the product.



Drawing No. 3-401327-00

Subec AB **Hesselmans Torg 5** **SE- 131 54 Nacka** **Sweden** **Phone: +46-8-88 46 33** **Email: info@subec.se** **Web: www.subec.se**

Copyright © 2026 Subec

CABLE CUTTER

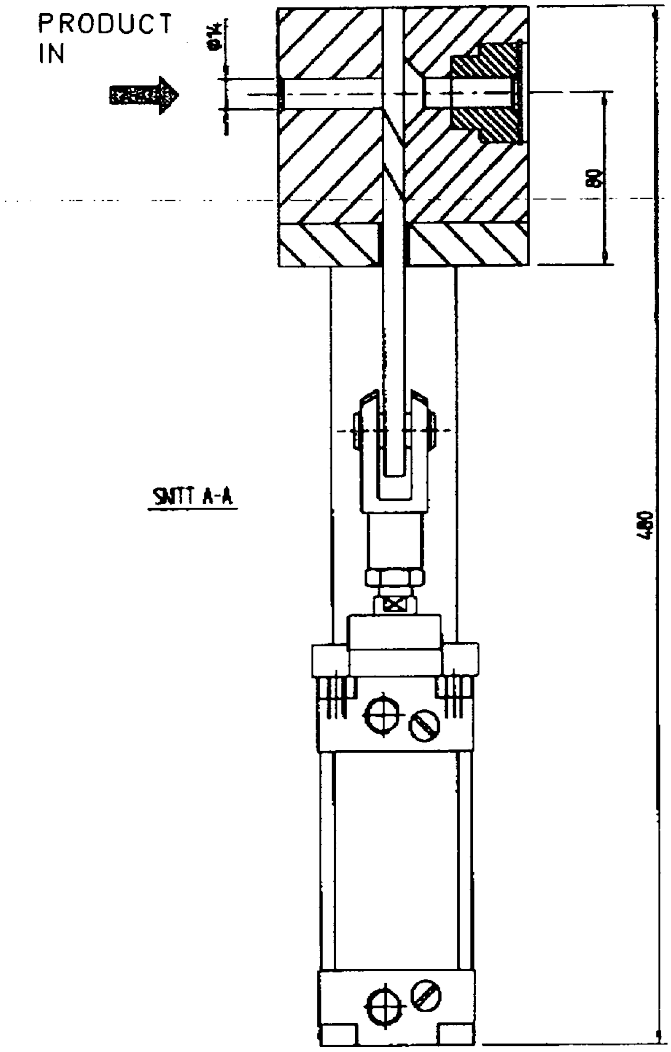

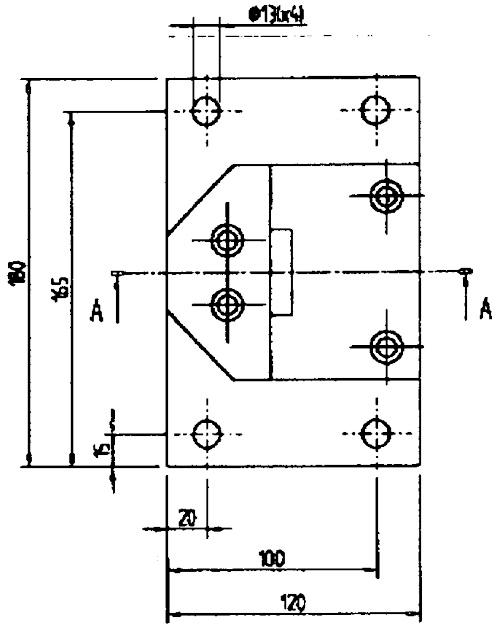

Article: 8188

Drawing No. 3-400450-00

Subec AB **Hesselmans Torg 5** **SE- 131 54 Nacka** **Sweden** **Phone: +46-8-88 46 33** **Email: info@subec.se** **Web: www.subec.se**

Copyright © 2026 Subec

VARIOUS KNIVES

Bottom Knife free Locking - Type FL

Drawing No. 3-400789-00

D	d	S
46	25	5-8-10-15-20
50	25	5-8-10-15-20
60	30	5-8-10-15-20
75	60	5-8-10-15-20
77	45	5-8-10-15-20
77	60	5-8-10-15-20
80	60	5-8-10-15-20
82	60	5-8-10-15-20
90	60	5-8-10-15-20
105	50	5-8-10-15-20
105	60	5-8-10-15-20
105	80	5-8-10-15-20
105	90	5-8-10-15-20
130	100	10-15-20-25-30
160	120	10-15-20-25-30
200	160	10-15-20-25-30

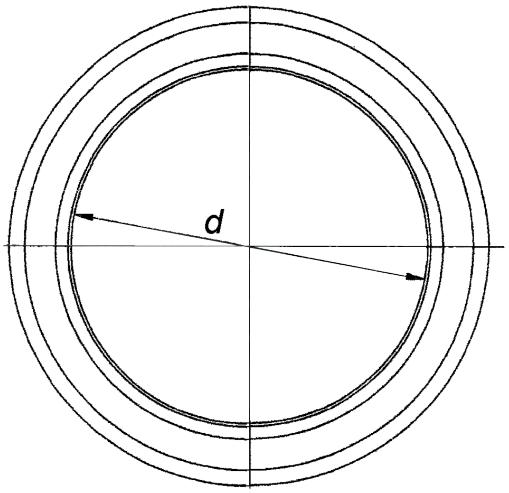



Bottom Knife self Locking - Type SL

Drawing No. 3-400790-00

D	d	S
46	25	10-15-20
50	25	10-15-20
60	30	10-15-20
75	45	10-15-20
77	45	10-15-20
80	60	10-15-20
82	60	10-15-20
90	60	10-15-20
105	50	10-15-20
105	60	10-15-20
105	80	10-15-20
105	90	10-15-20

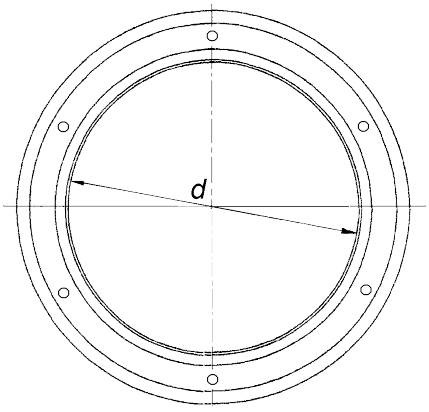

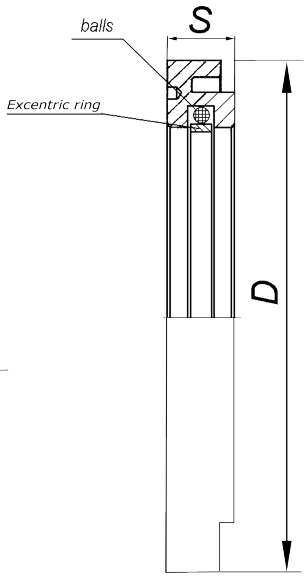

Subec AB **Hesselmans Torg 5** **SE- 131 54 Nacka** **Sweden** **Phone: +46-8-88 46 33** **Email: info@subec.se** **Web: www.subec.se**

Copyright © 2026 Subec

VARIOUS KNIVES

Dished knife - Form 1

Drawing No. 3-400792-00

D	d	S
62	40	1,2
65	40	1
72	50	0,8-1
75	45	1,2
75	50	1
90	60	0,8-1,2
100	70	0,8-1,2
100	66	0,8
105	65	0,8-1-1,2
105	70	1,2
105	75	0,8-0,9-1-1,2
108	65	1,2
108	82	1,2
105,6	81,05	1,24
130	70	1,5-1,8
130	80	1,5-1,8
130	100	1,2-1,5
135	100	1,5-1,8
140	70	1,8-2,5-3
150	70	2-2,5
150	80	2-2,5
150	90	3,5
175	70	2,2
180	70	2,5-3,7
200	80	4

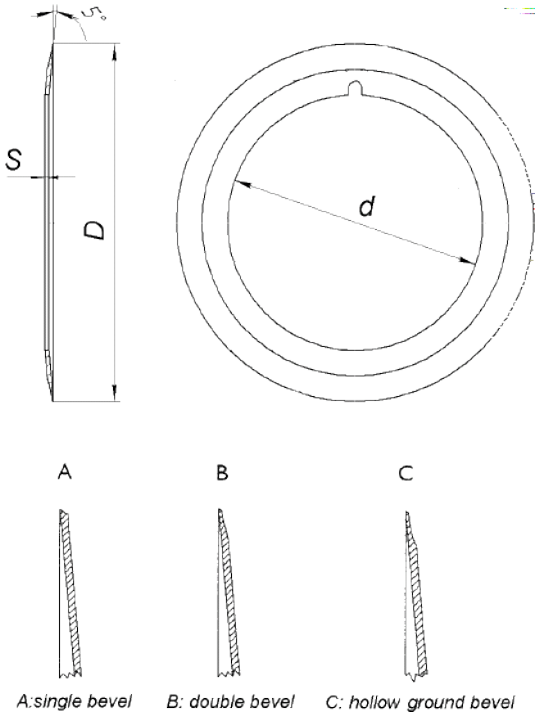

Dished knife with bayonet bore - Form 2

Drawing No. 3-400791-00

D	d	S
64,3	40	1-1,2
105	65	1,2
108	65	1,2
130	80	1,5

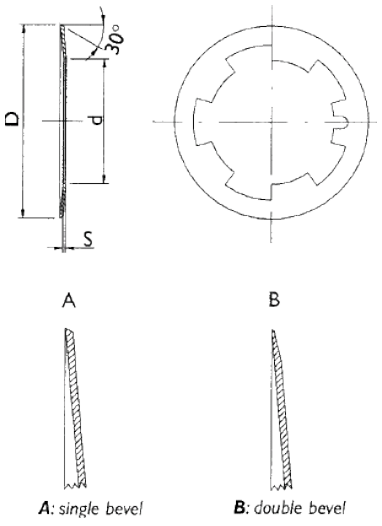

Subec AB
Hesselmans Torg 5
SE- 131 54 Nacka
Sweden
Phone: +46-8-88 46 33
Email: info@subec.se
Web: www.subec.se

Copyright © 2026 Subec

PRINT HEAD GUIDE, PHG

Info: Fast positioning of print head in the Y and Z axis (cartesian coordinate system).

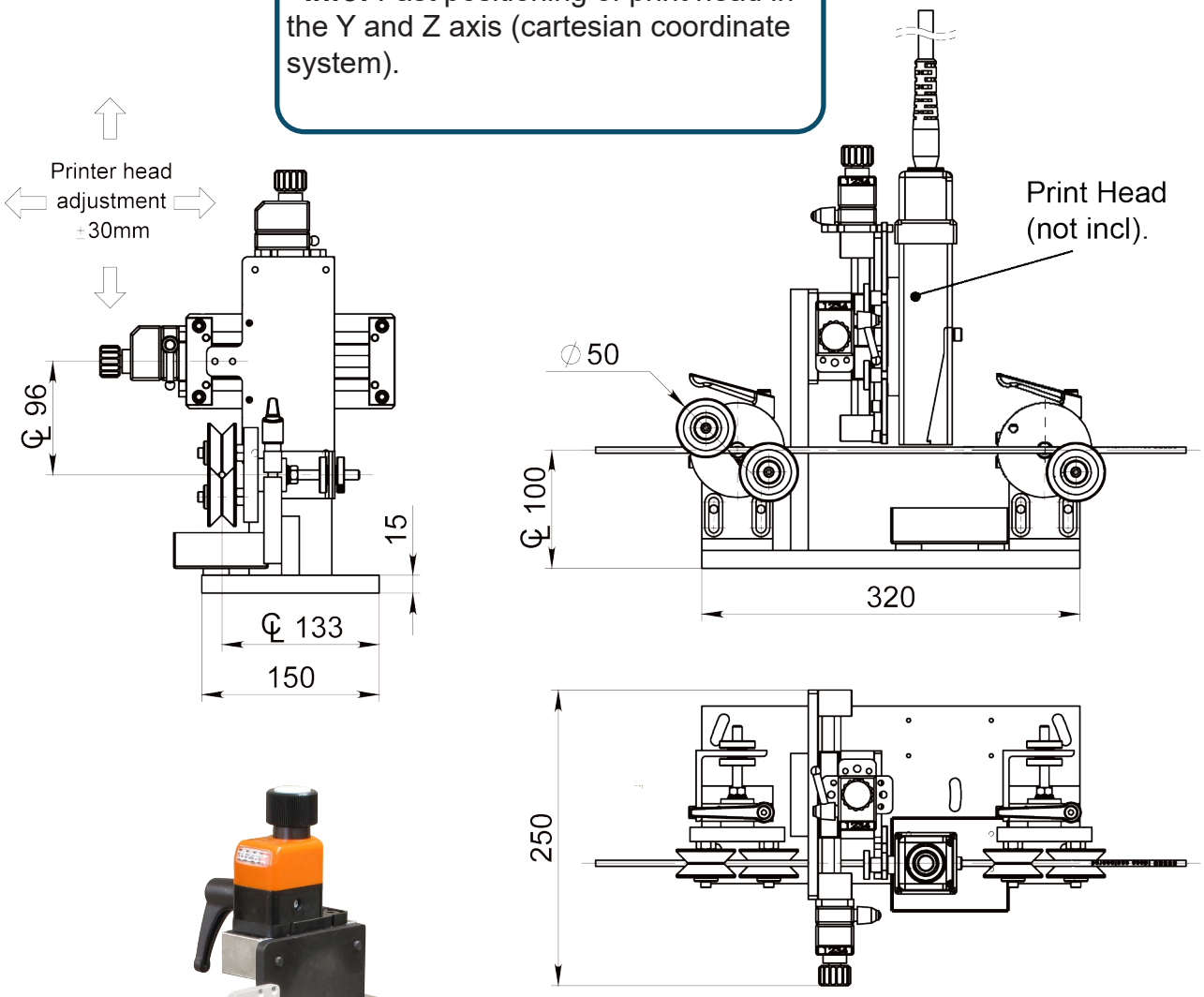

Article: 13716



Info:
Accessory to ink jet printers.

Aligns the product through the printing process for improved results.

Drawing No. 3-401289-00

Subec AB **Hesselmans Torg 5** **SE- 131 54 Nacka** **Sweden** **Phone: +46-8-88 46 33** **Email: info@subec.se** **Web: www.subec.se**

Copyright © 2026 Subec

PRINT HEAD GUIDE, PHG

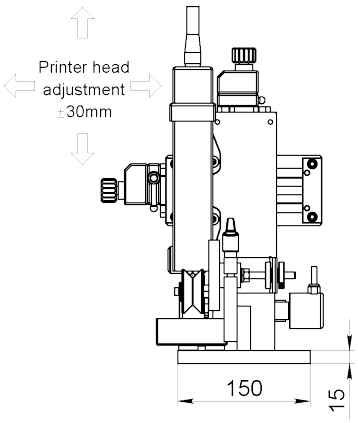

DETAIL A
SCALE 1 : 2

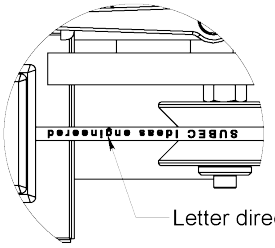

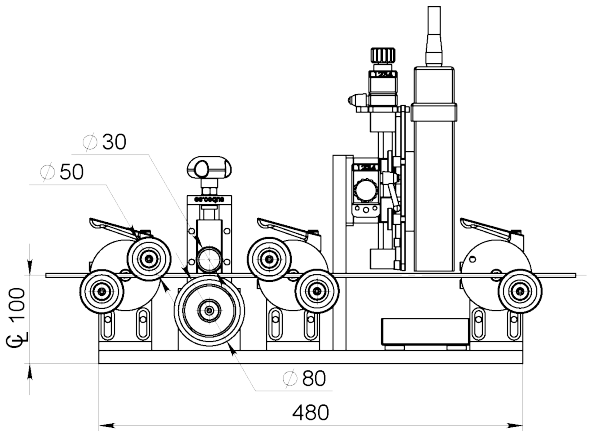

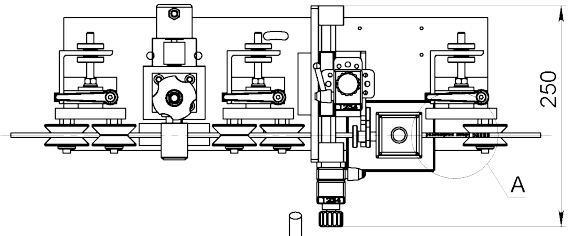

Option: Height adjustable Stand
Article: 04880
Weight: 15,5kg

Article: 11417A

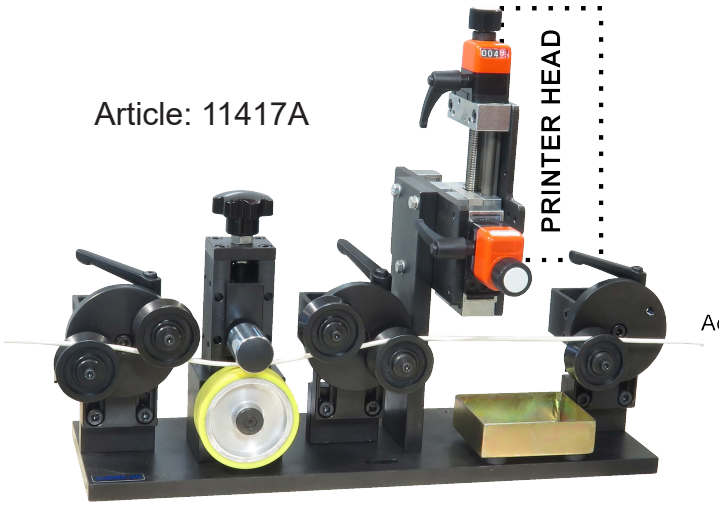

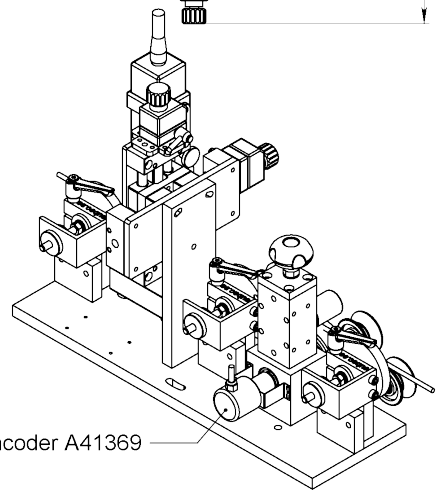

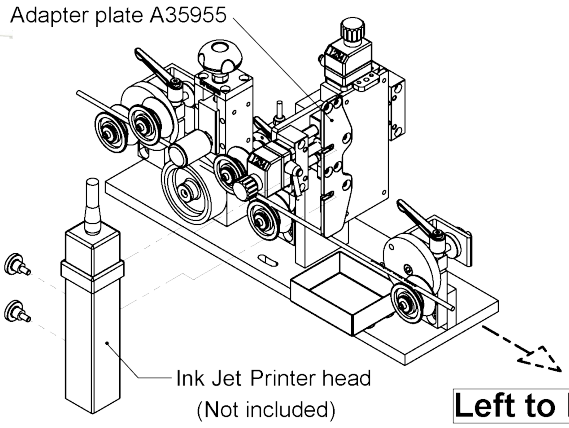

Info:
Accessory to ink jet printers.

Aligns the product through the printing process for improved results.

Drawing No. 3-401289-00

Subec AB **Hesselmans Torg 5** **SE- 131 54 Nacka** **Sweden** **Phone: +46-8-88 46 33** **Email: info@subec.se** **Web: www.subec.se**

Copyright © 2026 Subec

PRINT HEAD GUIDE, PHG

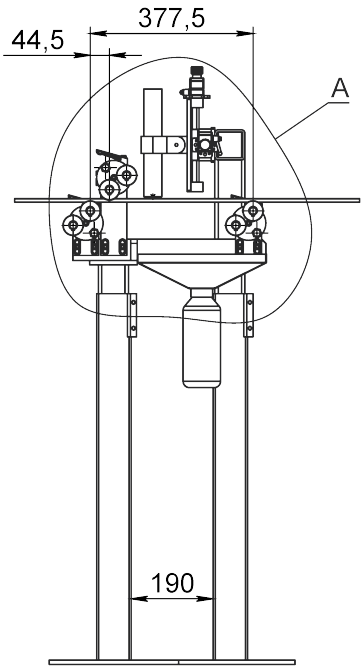

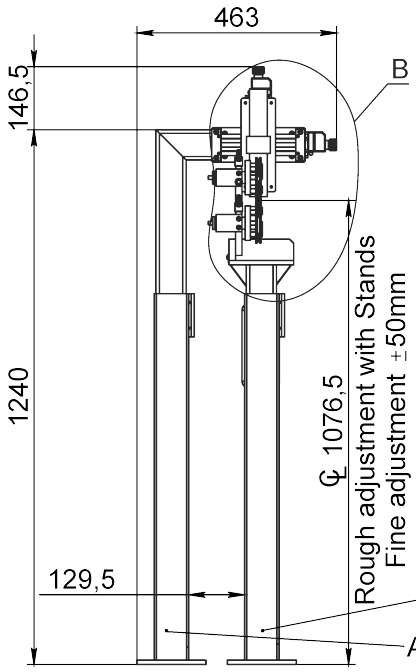

DETAIL B
SCALE 2 : 15

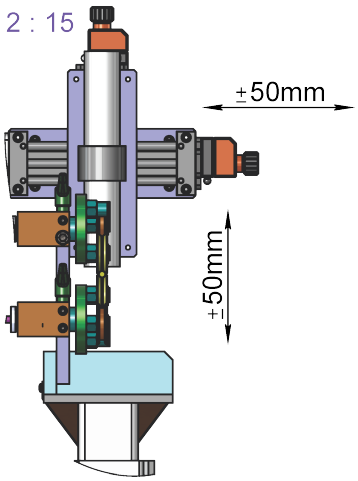

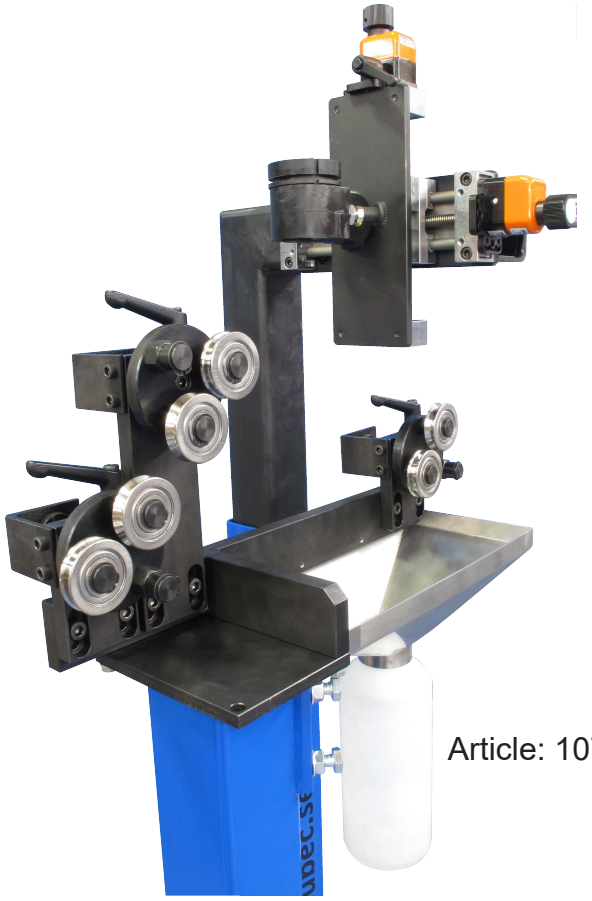

DETAIL A
SCALE 2 : 15

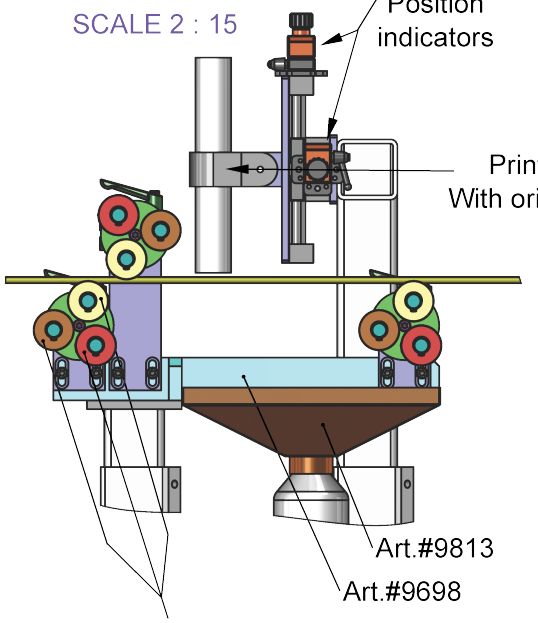

Various pulleys with different grooves are available

Article: 10760

Drawing No. 3-401257-00

Subec AB **Hesselmans Torg 5** **SE- 131 54 Nacka** **Sweden** **Phone: +46-8-88 46 33** **Email: info@subec.se** **Web: www.subec.se**

Copyright © 2026 Subec

PRINT HEAD GUIDE, PHG

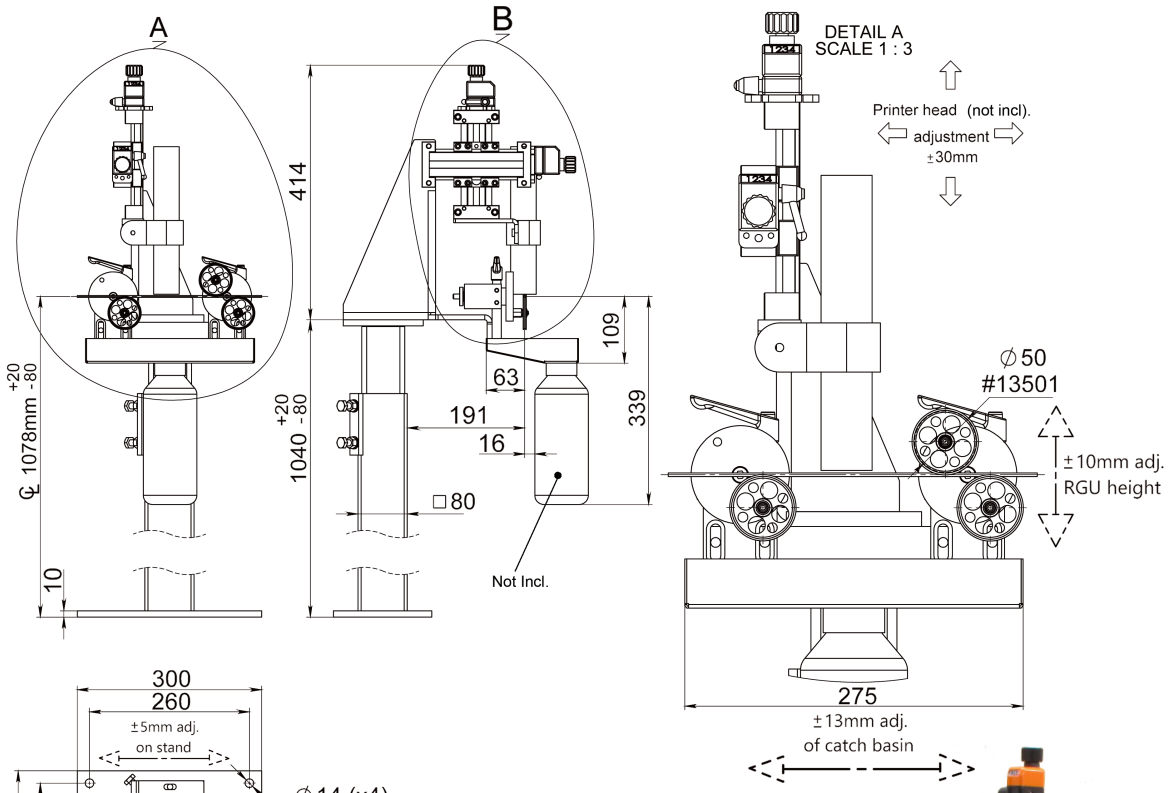

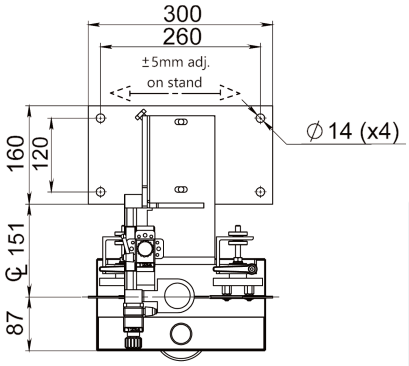

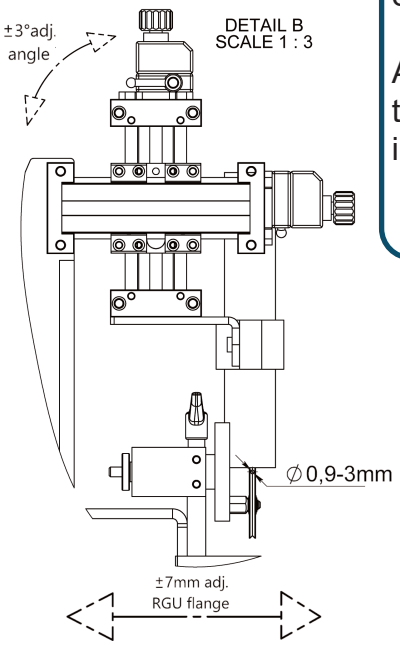

Info:
Accessory to ink jet printers.

Fast positioning of print head in the Y and Z axis (cartesian coordinate system).

Aligns the product through the printing process for improved results.



Article: 13274

Drawing No. 3-401376-00

Subec AB **Hesselmans Torg 5** **SE- 131 54 Nacka** **Sweden** **Phone: +46-8-88 46 33** **Email: info@subec.se** **Web: www.subec.se**

Copyright © 2026 Subec

PRINT HEAD GUIDE, PHG

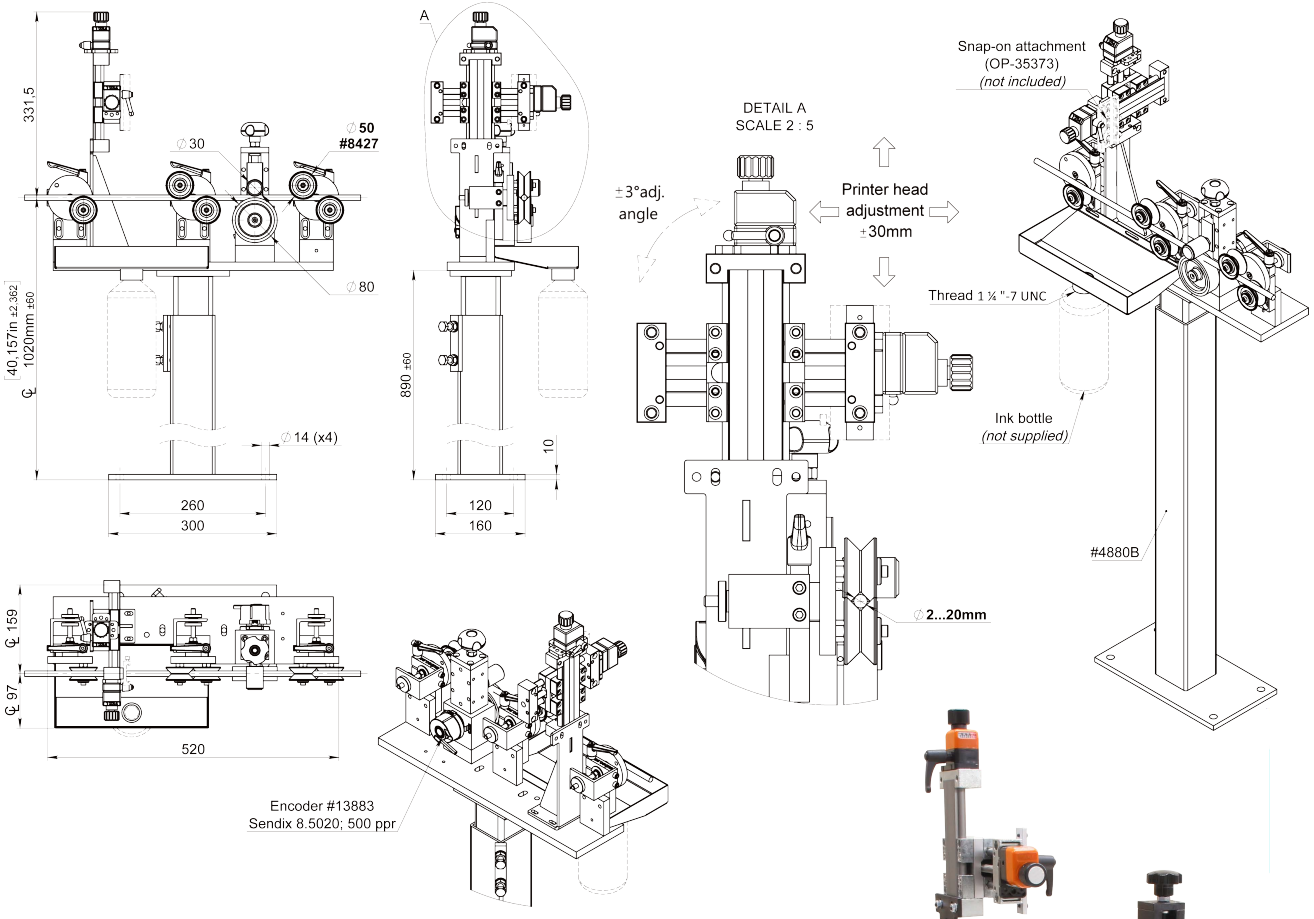

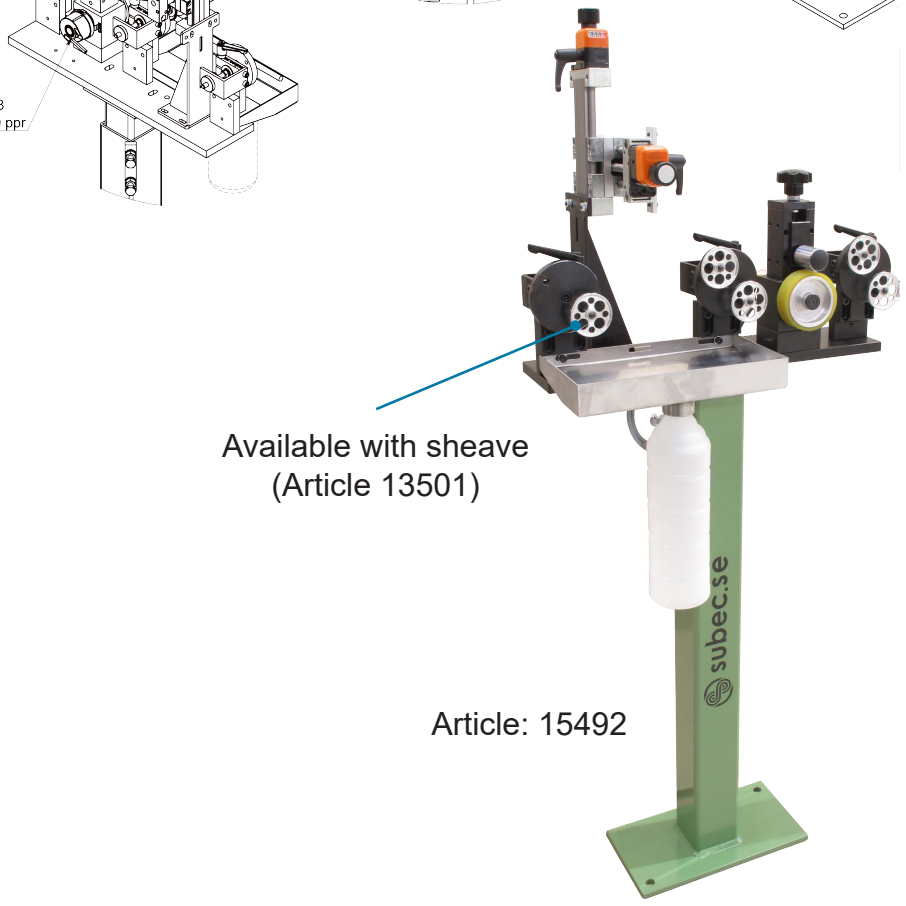

Available with sheave
(Article 13501)

Article: 15492

Drawing No. 3-401376-00

Subec AB **Hesselmans Torg 5** **SE- 131 54 Nacka** **Sweden** **Phone: +46-8-88 46 33** **Email: info@subec.se** **Web: www.subec.se**

Copyright © 2026 Subec

PRINT HEAD GUIDE, PHG

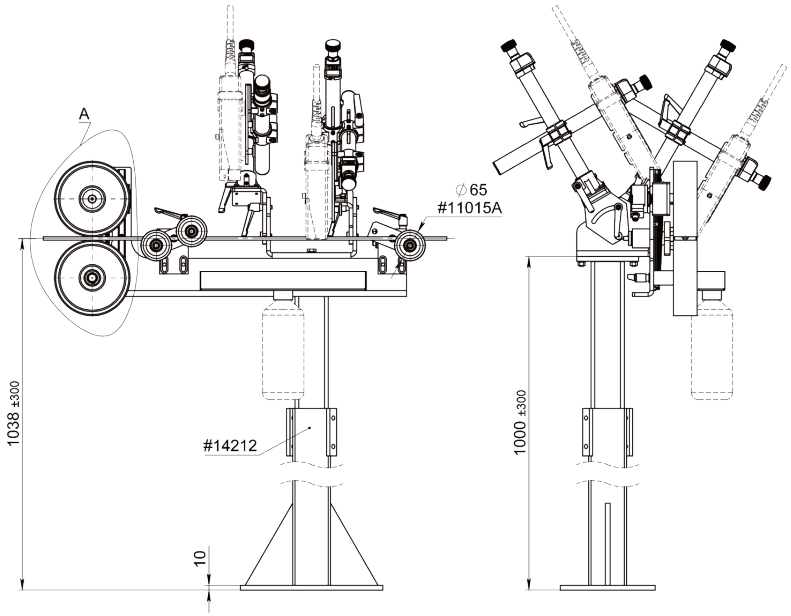

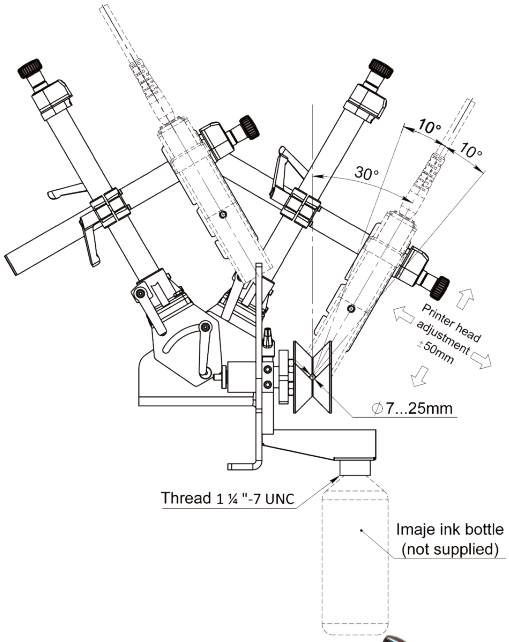

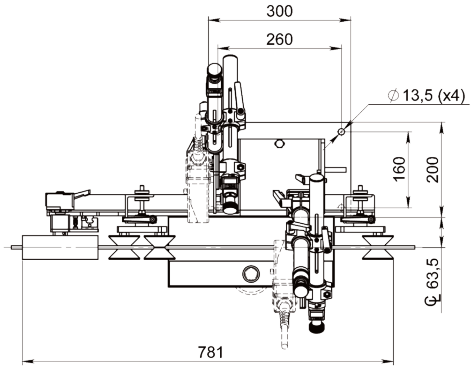

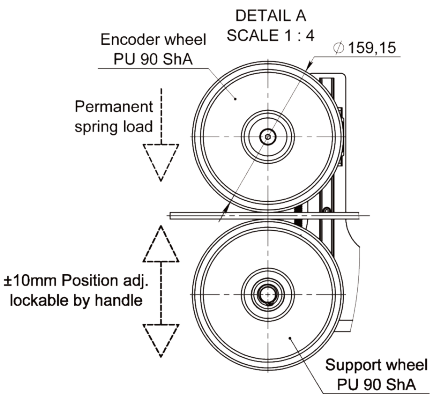



Article: 15389

Drawing No. 3-401376-00

Subec AB **Hesselmans Torg 5** **SE- 131 54 Nacka** **Sweden** **Phone: +46-8-88 46 33** **Email: info@subec.se** **Web: www.subec.se**

Copyright © 2026 Subec

CUSTOMIZED PRINT HEAD GUIDES, PHG



Article: 14136 (PHG), 14135 (Height adjustable Stand), 0811A (Wire Straightener)
PHG in combination with wire straightener on a height adjustable stand.

Subec AB **Hesselmans Torg 5** **SE- 131 54 Nacka** **Sweden** **Phone: +46-8-88 46 33** **Email: info@subec.se** **Web: www.subec.se**

Copyright © 2026 Subec

CABLE CLAMP

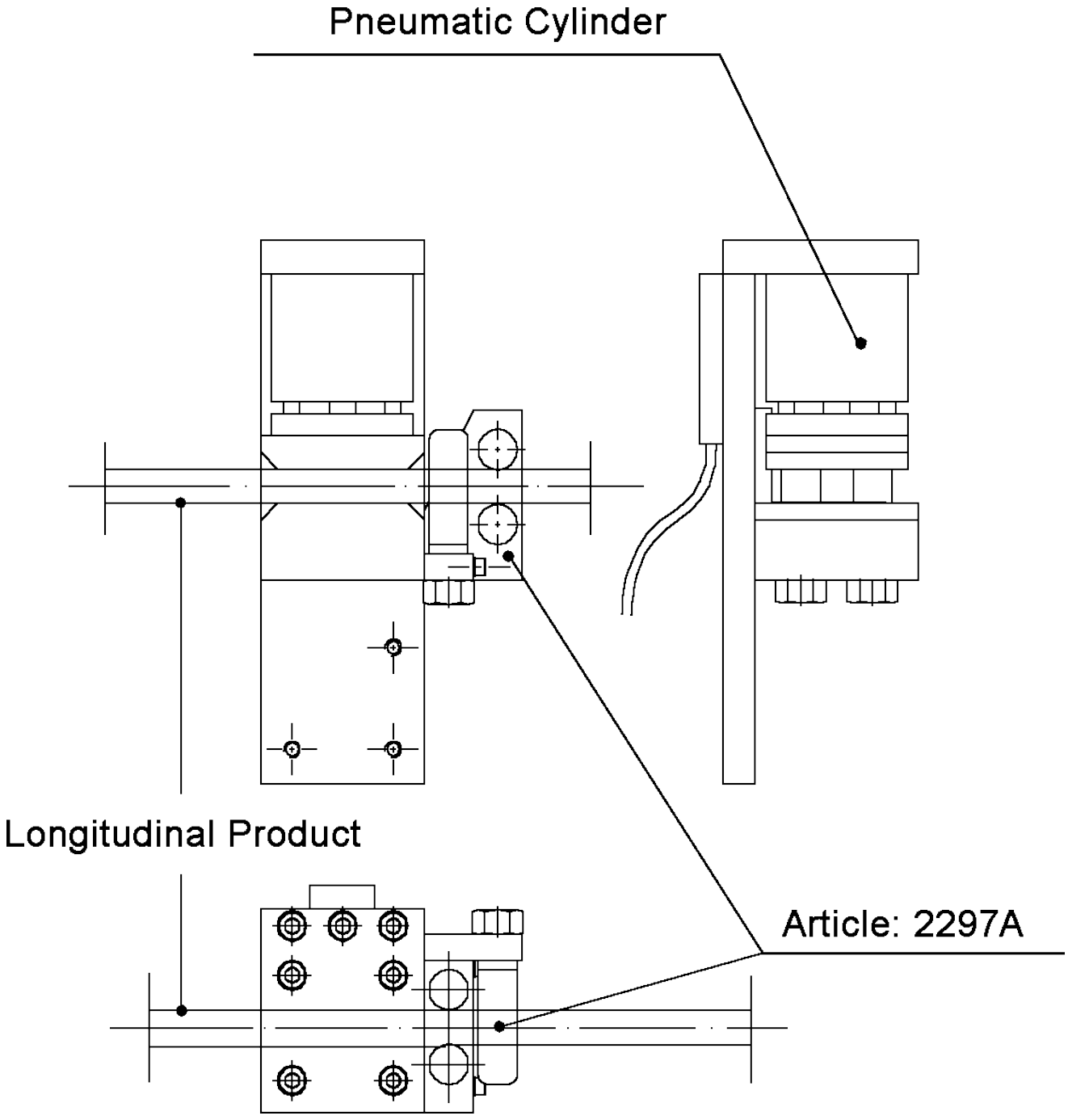

Drawing No. 3-400474-00

Subec AB
Hesselmans Torg 5
SE- 131 54 Nacka
Sweden
Phone: +46-8-88 46 33
Email: info@subec.se
Web: www.subec.se

Copyright © 2026 Subec

BALLOON CLAMPS

Pneumatic

Info:
The rubber insert clamps irregular shaped products and also two parallel wires of different diameters.

Connection Diameter:
EU: 6mm
USA: 1/4” inch

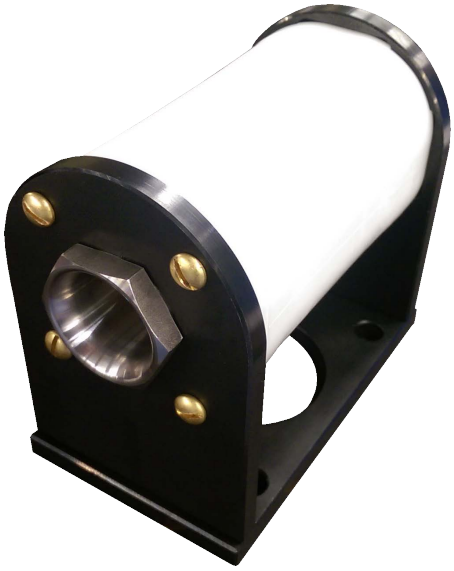

Article: 10048A

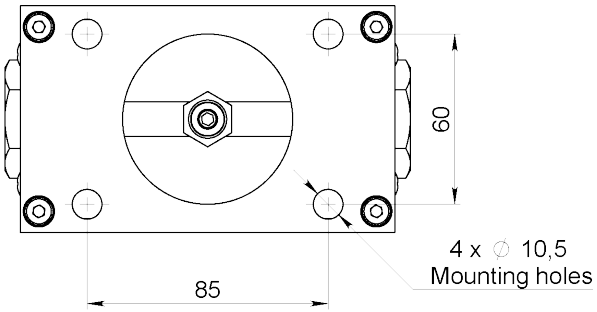

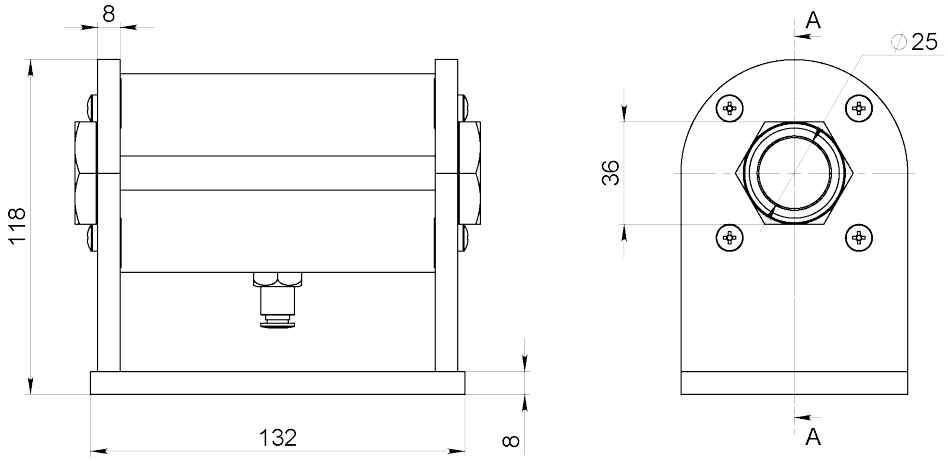

Example drawing of article 10048A with holder

Article	Max Product Ø	Approx. Clamp Length
10048A*	25	120
11739*	40	160
11439	50	170
10881	200	438
13876	200	525

Drawing No. 3-401266-01

* Stock item

Subec AB **Hesselmans Torg 5** **SE- 131 54 Nacka** **Sweden** **Phone: +46-8-88 46 33** **Email: info@subec.se** **Web: www.subec.se**

Copyright © 2026 Subec

CUSTOMISED ASSEMBLIES



Article: 11739
Pinch Clamp with inlet/outlet guides.
Complete assembly

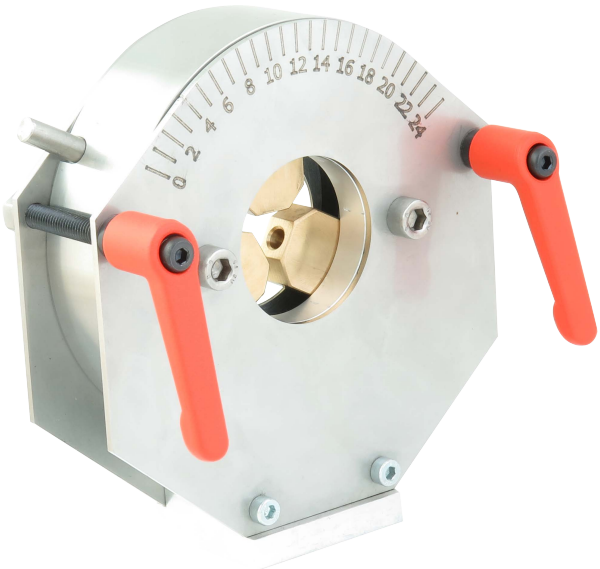

Article: 9055
Magnet Assembly



Article: 13553
Sheave Assembly with Product Retaining Pin

More information on request

Subec AB **Hesselmans Torg 5** **SE- 131 54 Nacka** **Sweden** **Phone: +46-8-88 46 33** **Email: info@subec.se** **Web: www.subec.se**

Copyright © 2026 Subec

Ideas engineered!

subec

Hesselmans Torg 5
131 54 Nacka
Sweden

Tel: +46 8 884633
E-mail: info@subec.se